Item No.	Part Number	Description	Material	Qty
1	Part 1	Base		1
2	Part2	Frame		1
3	Part3	Pulley		1
4	Part7	M12 Bolt		2
5	Part4	Bushing		1
6	Part5	Shaft		1
7	Part6	Key		1
8	DIN EN 1663 - M16 - N			1

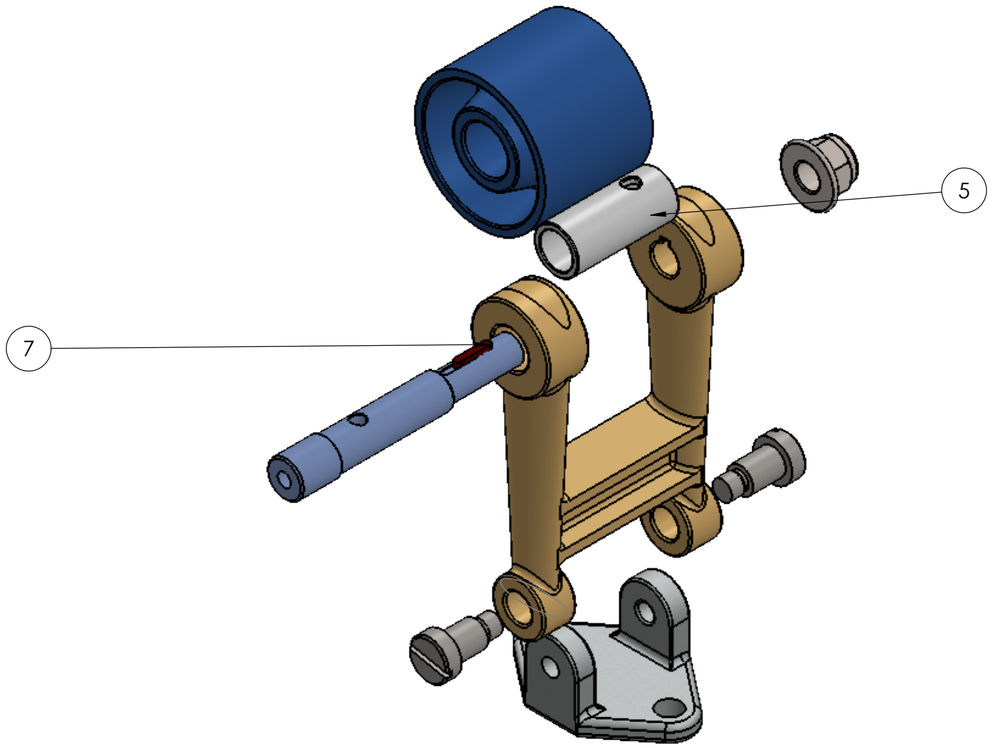

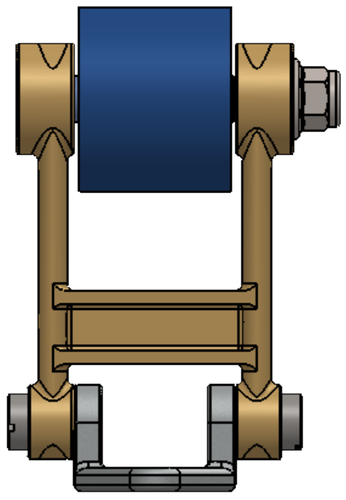

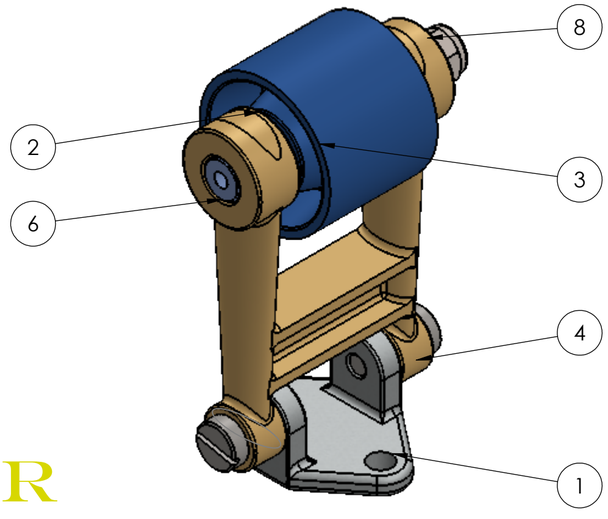

AMIR SOUHAIL
RESEARCH AND DEVELOPMENT ENGINEER
AUTONOMUS UNDERWATER VEHICLE
LA SPEZIA ITALY
AMIR.SOUHAIL@GMAIL.COM

PROPRIETARY AND CONFIDENTIAL

THE INFORMATION CONTAINED IN THIS DRAWING IS THE SOLE PROPERTY OF <INSERT COMPANY NAME HERE>. ANY REPRODUCTION IN PART OR AS A WHOLE WITHOUT THE WRITTEN PERMISSION OF <INSERT COMPANY NAME HERE> IS PROHIBITED.

NEXT ASSY | USED ON
APPLICATION

UNLESS OTHERWISE SPECIFIED:
DIMENSIONS ARE IN INCHES
TOLERANCES:
FRACTIONAL ±
ANGULAR: MACH ± BEND ±
TWO PLACE DECIMAL ±
THREE PLACE DECIMAL ±
INTERPRET GEOMETRIC TOLERANCING PER:
MATERIAL
FINISH
DO NOT SCALE DRAWING

	NAME	DATE
DRAWN		
CHECKED		
ENG APPR.		
MFG APPR.		
Q.A.		

COMMENTS:

TITLE:

SIZE | DWG. NO. | REV
Belt Tensioner Parts
SCALE: 1:2 | WEIGHT: | SHEET 1 OF 1