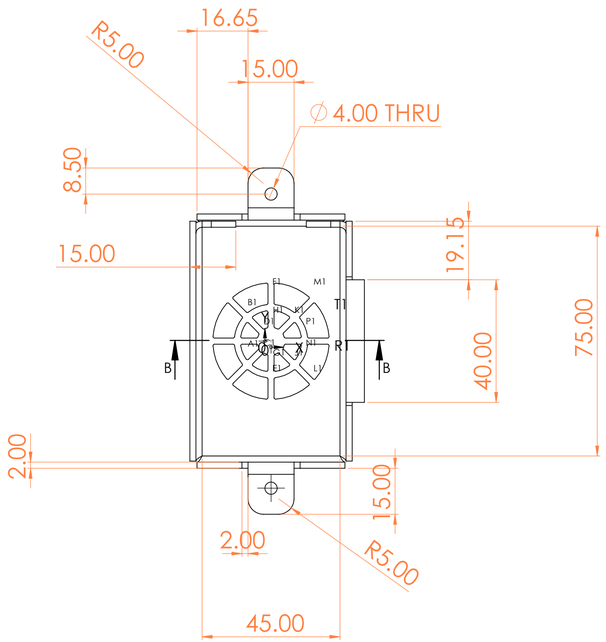

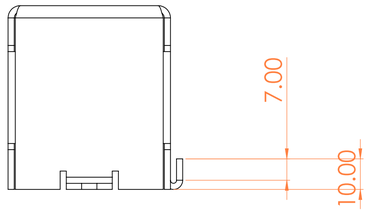

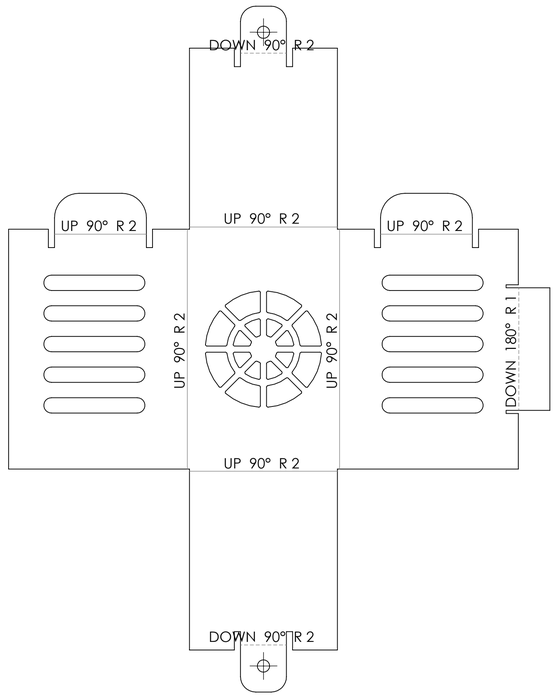

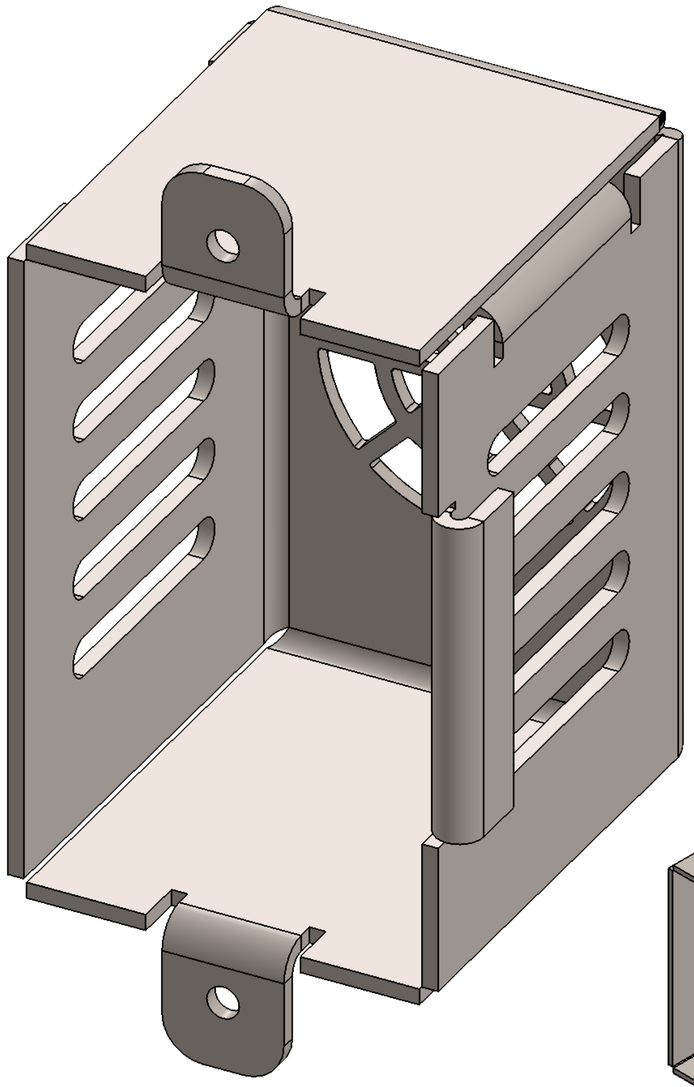

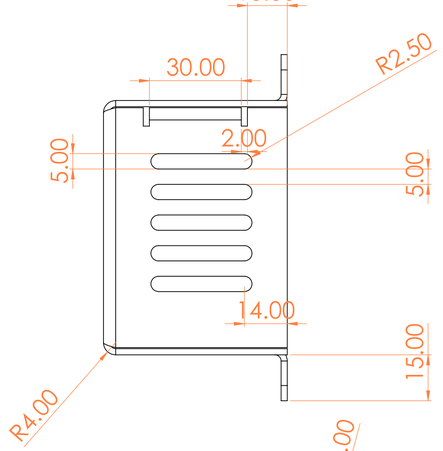

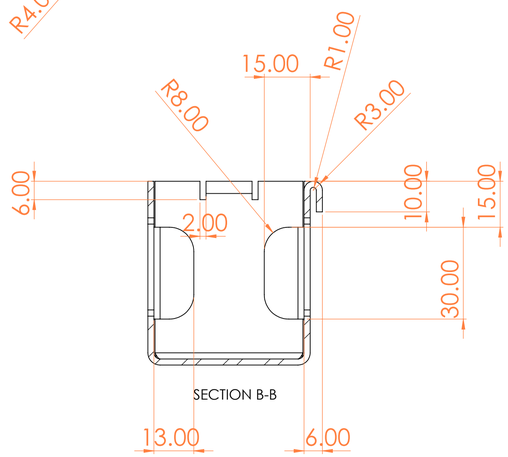

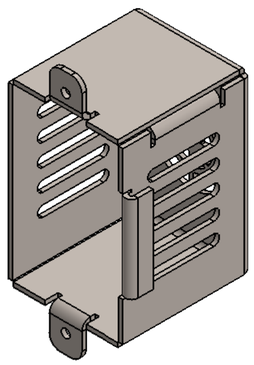

TAG	X LOC	Y LOC	SIZE
A1	-14.14	-6.74	
B1	-14.14	6.74	
C1	-6.91	-3.54	
D1	-6.91	3.54	
E1	-6.74	-14.14	
F1	-6.74	14.14	
G1	-3.54	-6.91	
H1	-3.54	6.91	
J1	3.54	-6.91	
K1	3.54	6.91	
L1	6.74	-14.14	
M1	6.74	14.14	
N1	6.91	-3.54	
P1	6.91	3.54	
R1	14.14	-6.74	
T1	14.14	6.74	

UNLESS OTHERWISE SPECIFIED:
DIMENSIONS ARE IN MILLIMETERS
SURFACE FINISH:
TOLERANCES:
LINEAR:
ANGULAR:

FINISH:

DEBURR AND BREAK SHARP EDGES

DO NOT SCALE DRAWING

REVISION

	NAME	SIGNATURE	DATE
DRAWN			
CHK'D			
APPV'D			
MFG			
Q.A			

TITLE:

MATERIAL:

WEIGHT:

DWG NO. Switch Box

A1

SCALE:1:1

SHEET 1 OF 1