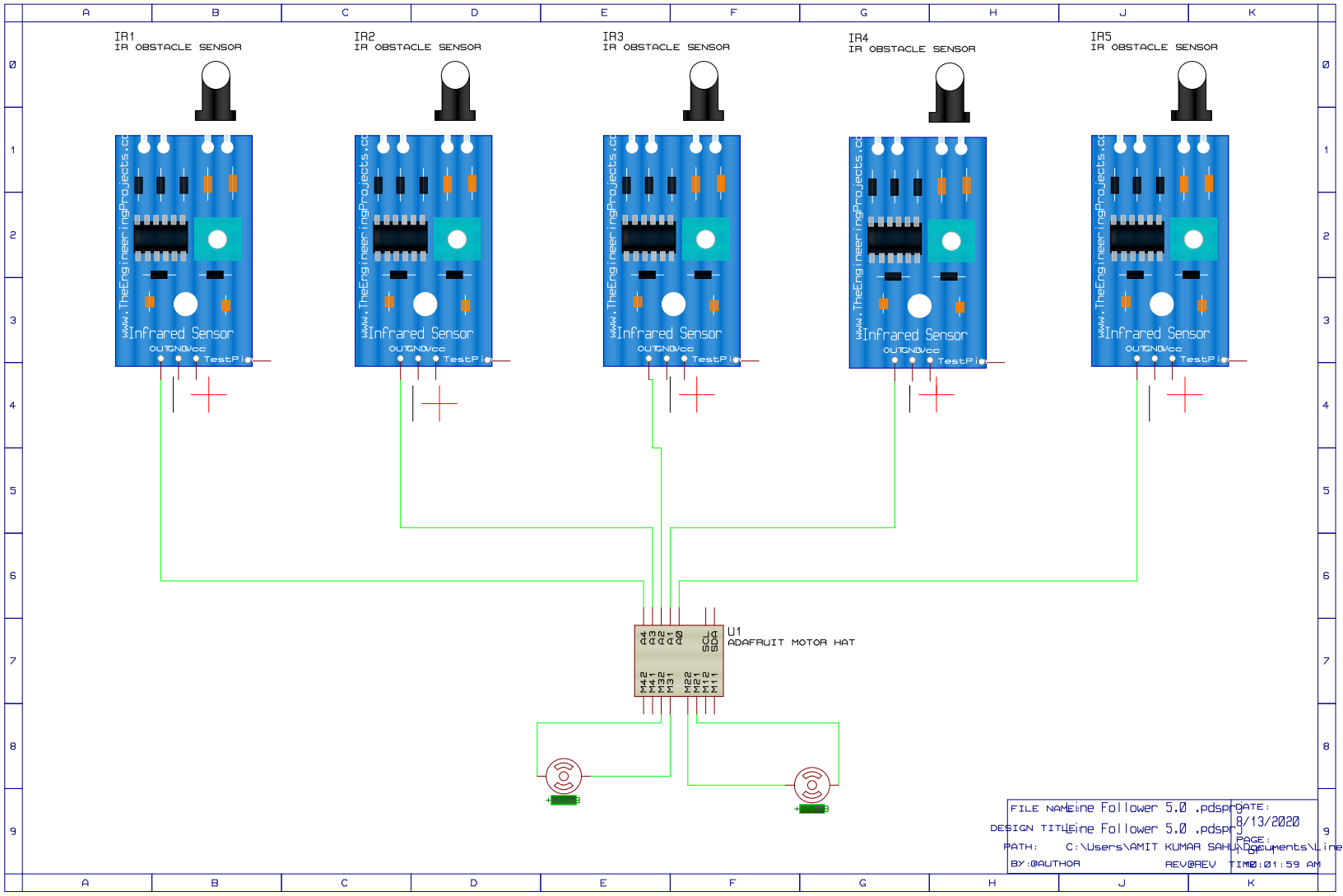
IR1
IR OBSTACLE SENSOR
IR2
IR OBSTACLE SENSOR
IR3
IR OBSTACLE SENSOR
IR4
IR OBSTACLE SENSOR
IR5
IR OBSTACLE SENSOR
Infrared Sensor
OUTGNDVcc
TestPi
U1
ADAFRUIT MOTOR HAT
A4
A3
A2
A1
A0
SCL
SDA
M42
M41
M32
M31
M22
M21
M12
M11
FILE NAME: Line Follower 5.0 .pdsprj
DESIGN TITLE: Line Follower 5.0 .pdsprj
PATH: C:\Users\AMIT KUMAR SAHU\Documents\Line
BY: @AUTHOR
REV: @REV
DATE: 8/13/2020
PAGE:
TIME: 01:59 AM