Unmanned Aerial Observation and Response System (URS)

Heritage Institute of Technology

Student Name: Amit Sutradhar(4th Year)

Project Advisors: Dr.Debjyoti Chowdhury

Department of Applied Electronics And Instrumentation

Acknowledgment
Chapter 1: Introduction……..… 1
Chapter 2: Here are ten advantages of (URS):…….2
Chapter 3: Project Specifications:……..….3
Chapter 4: Applications of a (USR)……..…..4
Chapter 5: Dynamics of a Quadcopter……..…5
5.1: Theory and Theoretical Calculations…….…..…6
5.2: Force and moments……..….7
5.3: Newton's second law of motion.…….……8
5.4: Hover condition……..…9
5.5: Rise motion……..……..…10
5.6: Drop motion……..……11
5.7: Yaw motion……12
5.8: Pitch and Roll motion……..…….13

Chapter 6 : Frame Architecture ……14
Chapter 7 : Drone propeller……..…15
Chapter 8 :Calculation thrust for motors …….……..…16
Chapter 9 : Power Lift Calculation ……..……..…17
Chapter 10 : Flight time calculation formula for our drone:……..…..18
Chapter 11 : The transmitter and receiver we will use to control the drone….……19
Chapter 12 : Power supply ……..…….……20
Chapter 13 : flight controller……..…….…..…21
Chapter 14 : ESC……..……..…….22
Chapter 15 : Drone firefighting system……..……..……23

Chapter 16 : Monitoring System……..…….23
16.1 : DHT 11……..…….……24
16.2 : BMP 180……..……..…..……25
16.3 : MQ 135……..…….……26
16.4 : OLED Display……..…….……27
16.5 : Glass PCB……..……28
16.6 :GPS Module……..……29

Introduction:

The Unmanned Aerial Observation and Response System (URS) project is an innovative drone designed to address the need for environmental monitoring, agricultural applications, and emergency response in remote or inaccessible locations. The URS is equipped with advanced sensors to measure a variety of environmental factors such as air quality, temperature, humidity, altitude etc . The drone is also equipped with a high-resolution camera, enabling it to capture detailed images and video of the surrounding area.

In addition to its observation capabilities,

1. The UAORS is also equipped with a water spray system that can be used for agricultural applications, such as spraying pesticides, ——
2. Designed for emergency response scenarios. It can be configured to carry payloads such as emergency equipment, and is capable of rapidly deploying these payloads to inaccessible areas.
3. The URS a valuable tool for environmental agencies, emergency responders, and other organizations tasked with monitoring and protecting the environment.

Overall, the URS project represents an exciting advancement in drone technology, with the potential to make a significant impact in environmental monitoring and emergency response operations.

Here are ten advantages of the Unmanned Aerial Observation and Response System (URS):

1. It can monitor environmental factors such as air quality, temperature, humidity, altitude etc. in remote or inaccessible locations.

2. It can capture high-resolution images and video of the surrounding area, providing detailed information for environmental monitoring and emergency response operations.

3. Its water spray system can be used for agricultural applications, such as spraying pesticides, which can increase efficiency and reduce costs.

4. It can carry payloads such as emergency equipment, which can be rapidly deployed to inaccessible areas during emergency response scenarios.

5. It can access areas that may be dangerous or difficult for humans to reach, making it a valuable tool for environmental agencies and emergency responders.

6. It can reduce the need for manned aircraft, which can be costly and have a larger environmental impact.

7. It can cover large areas quickly and efficiently, allowing for more frequent monitoring and response operations.

8. It can provide real-time data and images, allowing for faster decision-making in emergency response scenarios.

9. It can operate for extended periods of time, reducing the need for frequent battery replacements or refueling.

10. It can be easily transported to different locations, making it a versatile tool for various organizations and applications.

Project Specifications:

Item Name	Quantity	Weight in grams
Lower body	1	251
Upper body	1	270
Motor holder	4	400
Propeller	4	44
Lithium Polymer Battery 6000 mAh	1	
Brushless motors	4	124
Flysky FS-i6x transmitter	1	18
CAM ESP Wi-Fi Bluetooth	1	7
Flight controller FC Built-in TCMMRC F4	1	
Mini PDB - Power distribution board	1	12
TTL Adapter board - Cam Adapter	1	4
bolts	4	92
MQ135	1	9
BMP180	1	3
DHT11	1	5
1.3 oled Display	1	8
GPS module	1	10
ESP 8266	1	8

Applications of the Unmanned Aerial Observation and Response System (URS) project:

1. **Environmental monitoring:** The URS can be used to monitor air quality, temperature, humidity, and other environmental factors in remote or hard-to-reach areas.

2. **Agricultural applications:** With its water spray system, the URS can be used to spray pesticides and fertilizers, making it a valuable tool for farmers.

3. **Emergency response:** The URS can be quickly deployed to inaccessible areas during emergency situations, such as natural disasters or wildfires, to deliver emergency equipment and supplies.

4. **Search and rescue:** The high-resolution camera on the URS can be used to search for missing persons or track the movement of potential hazards during a rescue operation.

5. **Wildlife monitoring:** The URS can be used to track animal populations and migration patterns, allowing for better conservation efforts.

6. I**nfrastructure inspection:** The URS can be used to inspect bridges, buildings, and other infrastructure in remote or hard-to-reach areas, saving time and resources.

7. **Law enforcement:** The URS can be used for surveillance and crime prevention in areas where traditional law enforcement methods may be difficult or dangerous.

8. **Disaster assessment:** The URS can be used to assess the damage caused by natural disasters, allowing for more efficient response and recovery efforts.

9. **Surveying and mapping:** The URS can be used to create detailed maps of remote or hard-to-reach areas, providing valuable information for a variety of industries.

10. **Research and development:** The URS can be used in research and development efforts to test and develop new technologies and applications for unmanned aerial vehicles.

Dynamics of a Quadcopter

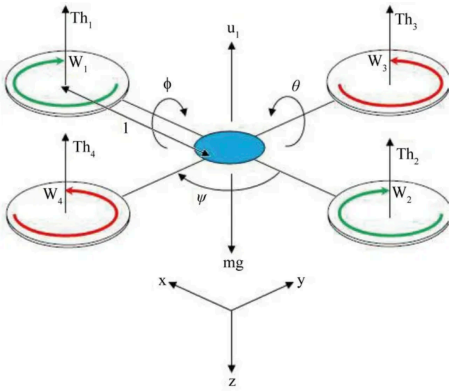

Theory and Theoretical Calculations.

<u>The calculation of the Quadcopter based on seven factors which given as:</u>

1. Force and moments. Fi = Kf x ωi^2

Mi= Km x ωi^2

My= (F1-F2) x L

MX= (F3-F4) x L

Weight= mg 2.

- The force (Fi) and moments (Mi, My, MX) can be calculated based on the rotational speed of each motor (ωi) and the coefficients of lift (Kf) and drag (Km) for the propellers.
- My and MX are the moments around the vertical and horizontal axes, respectively, and depend on the differences in lift between opposing motors, multiplied by the distance between them (L).

<u>2. Newton's second law of motion.</u>

>for linear motion:

Force = mass x linear acceleration.

>For rotational motion:

Torque = Inertia x angular acceleration .

- This law states that the force applied to an object is proportional to its mass and acceleration. For linear motion, the force can be calculated as mass times linear acceleration. For rotational motion, the torque can be calculated as inertia times angular acceleration.

3. Hover condition.
mg=F1+F2+F3+F4
All Moments= 0

At hover, the weight of the quadcopter (mg) is balanced by the combined lift of all four motors (F1 + F2 + F3 + F4). All moments must also be zero to maintain balance.

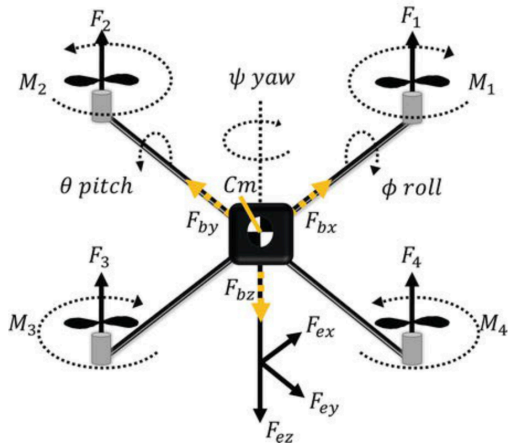

4. Rise motion.
mg<F1+F2+F3+F4
All Moments= 0

Rise motion:
During a rise, the total thrust of all motors (F1 + F2 + F3 + F4) must exceed the weight of the quadcopter (mg) to produce upward acceleration. All moments must still be zero for balance.

5. Drop motion.
mg>F1+F2+F3+F4
All Moments= 0

6. Yaw motion.
mg=F1+F2+F3+F4
All Moments ≠ 0

aw motion:

- During a yaw (turning) motion, the total lift of all motors (F1 + F2 + F3 + F4) must equal the weight of the quadcopter (mg) to maintain altitude. However, the moments around the vertical axis (My) must be non-zero to produce a turning torque.

7. Pitch and Roll motion.
mg<F1+F2+F3+F4
All Moments ≠ 0

Pitch and Roll motion:

- During a pitch or roll motion (tilting), the total lift of all motors (F1 + F2 + F3 + F4) must still equal the weight of the quadcopter (mg) to maintain altitude. However, the moments around the horizontal axes (MX and My) must also be non-zero to produce a tilting torque.

Frame Architecture

A drone frame is the physical structure or chassis that houses all the components of a drone, including the flight controller, motors, and other electronic parts. The size and type of drone frame you choose will depend on the purpose and functionality of your drone, as well as your personal preference.
Here are the different types of drone frames based on their size:

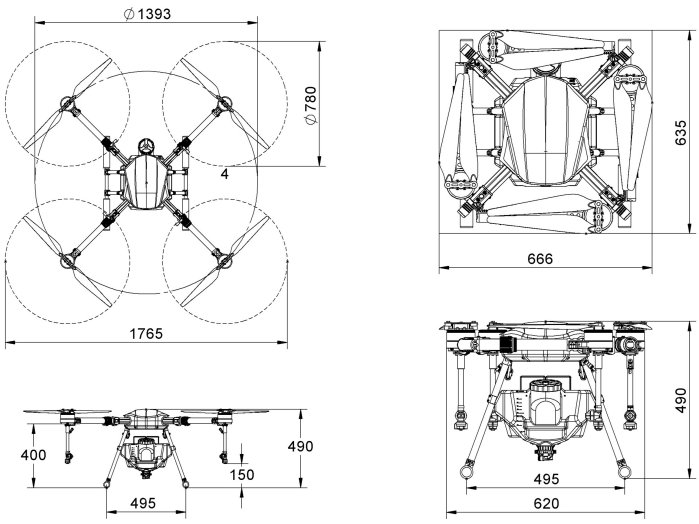

11. Nano: This is the smallest type of drone frame, typically measuring less than 100mm in size. They are lightweight and can fit in the palm of your hand, making them ideal for indoor flying and performing stunts.

12. Micro: Slightly larger than nano frames, micro frames typically range from 100mm to 200mm. They are still relatively small and lightweight, but can support slightly larger motors and batteries, allowing for longer flight times.

13. Mini: Mini frames typically range from 200mm to 300mm in size and are slightly larger than micro frames. They are popular among hobbyists and are suitable for both indoor and outdoor flying.

14. Mid-size: Mid-size frames typically range from 300mm to 500mm in size and are commonly used for aerial photography and videography. They can support larger cameras and gimbals, allowing for more stable footage.

15. Large: Large frames are typically over 500mm in size and are used for industrial purposes such as surveying, mapping, and inspection. They are also commonly used in search and rescue operations.

In addition to size, drone frames come in various shapes and designs, including H-frames, X-frames, and stretched X-frames, each with their own advantages and disadvantages. It's important to choose a drone frame that is compatible with your desired components and suits your intended purpose.

Drone propeller

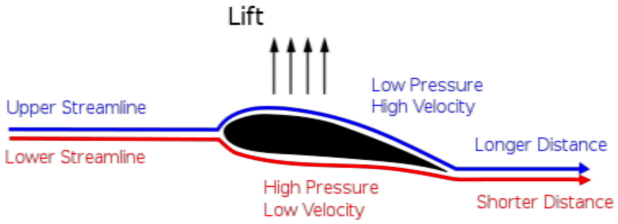

A drone propeller is a rotating blade that provides the necessary thrust to lift and maneuver a drone in the air. The number and size of the propellers vary depending on the drone's design, weight, and intended use. Most drone propellers are made of lightweight and durable materials such as plastic or carbon fiber. They typically have two or more blades that rotate at high speeds, generating the lift needed to keep the drone airborne.

The rotation of the propellers is powered by an electric motor, which is controlled by the drone's flight controller. By adjusting the speed and direction of the propellers, the flight controller can control the drone's altitude, speed, and direction of movement. It is essential to choose the right propeller for your drone to ensure stable flight performance and safety. Factors to consider when choosing a propeller include size, material, pitch, and number of blades. It is also important to check the compatibility of the propeller with your drone's motor and flight controller.

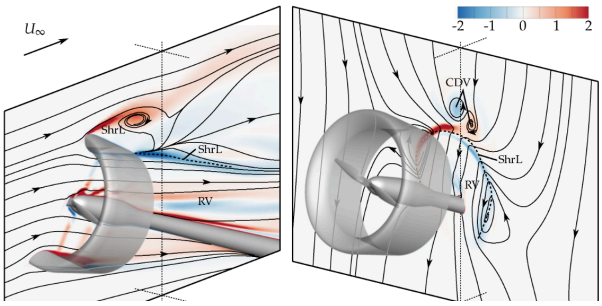

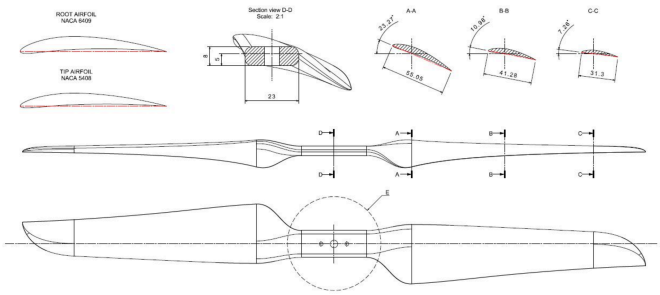

- Ducting refers to the installation of a tube-like structure around a propeller, which can improve its efficiency and thrust.
- By enclosing the propeller in a duct, the airflow around it is directed more efficiently, which can increase its thrust and efficiency.
- The ducting can also reduce the impact of external factors such as waves or wind on the propeller, resulting in smoother operation and better performance.
- Ducting can be particularly useful in applications such as marine propulsion, where the presence of water can create turbulence and reduce propeller efficiency.
- However, ducting can also increase the weight and complexity of the system, and may not be suitable for all applications.
- Ultimately, the effect of ducting on propeller efficiency and thrust will depend on a range of factors such as the size and design of the duct, the speed of the propeller, and the characteristics of the surrounding fluid.

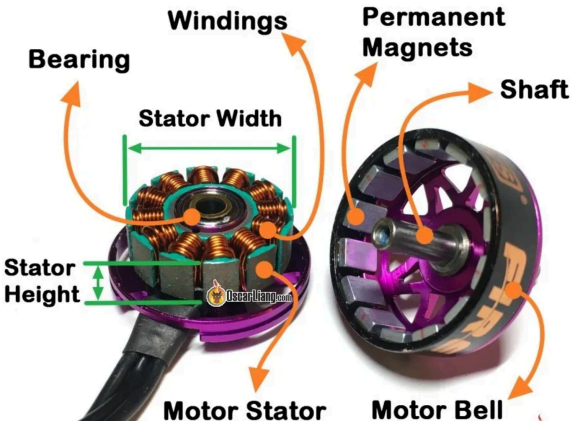

Drone brushless motors are commonly used in quadcopters and other types of UAVs (Unmanned Aerial Vehicles). Here are some important points to consider when using brushless motors for drones:

16. Power and Efficiency: Brushless motors are more powerful and efficient than brushed motors, as they eliminate the friction and voltage drop associated with the brushes. This makes them ideal for drones, as they need to generate a lot of power while also conserving energy to maximize flight time.

17. Size and Weight: Brushless motors are smaller and lighter than brushed motors, which is important for drones that need to be as light and compact as possible. This also allows for greater maneuverability and agility in flight.

18. Control and Stability: Brushless motors provide precise and stable control over the drone's movements, as they can be controlled by varying the speed and direction of the rotating magnetic field. This allows for smooth and accurate flight control, even in windy or turbulent conditions.

19. Durability and Maintenance: Brushless motors are more durable and require less maintenance than brushed motors, as they have fewer moving parts and are less prone to wear and tear. This makes them ideal for drones, which need to be able to withstand frequent use and occasional crashes.

20. Compatibility and Configuration: When selecting a brushless motor for your drone, it is important to ensure that it is compatible with the other components in your system, such as the propellers and electronic speed controller (ESC). You will also need to configure the motor's settings, such as the timing and pulse width modulation (PWM), to optimize its performance for your specific drone design and flight requirements.

Calculation thrust for motors

Thrust for motors is calculated by following procedure:

1. First of all, calculate the weight of drone including the objects that will drone carry during its flight. Multiply the weight of drone by two to determine the minimum thrust. Again add 20% of this calculated weight to get total weight.

Calculated weight = 2× [weight of drone + weight of carried objects]

Total weight =2× [weight of drone + weight of carried objects] + [0.2×calculated weight]

2. And finally divide total weight by number of motors

$$\frac{calculated\ weight + \ [0.2 \times calculated\ weight\ ]}{Numbers\ of\ motors}$$

Power Lift Calculation

When a body move through a fluid, fluid always apply a force on the surface of the moving body. Lift is one component of that applied force. Lift always applied perpendicular to the direction of motion of the object. On an airfoil shape moves through the air, the stream lines on the upper side of airfoil are closer than the lower side of the airfoil. According to the where streamline are closer, pressure will be lower. This pressure difference creates a lift. Power of lift is calculated by the following formula:

$$Power\ of\ Lift = CI \times \frac{\rho.V^2}{2} \times A$$

Where 'CI' is lift coefficient, ρ is density of fluid, V is speed of moving object and arear of wing.

Flight time calculation formula for our drone:

Time of flight can be calculated by using following formula

$$Time\ of\ flight\ of\ drone = \boldsymbol{t} = \frac{Battery\ capacity \times Battery\ discharge}{Average\ amp.}$$

Where 't' is the time of flight in hours. To get time of flight in minutes divide it by 60. Average Amp are amperes of batteries.

$$Time\ of\ flight\ of\ drone = t = \frac{Battery\ capacity(60) \times Battery\ discharge(11.1)}{Average\ amp(100\ ).} = 6.6\ hours$$

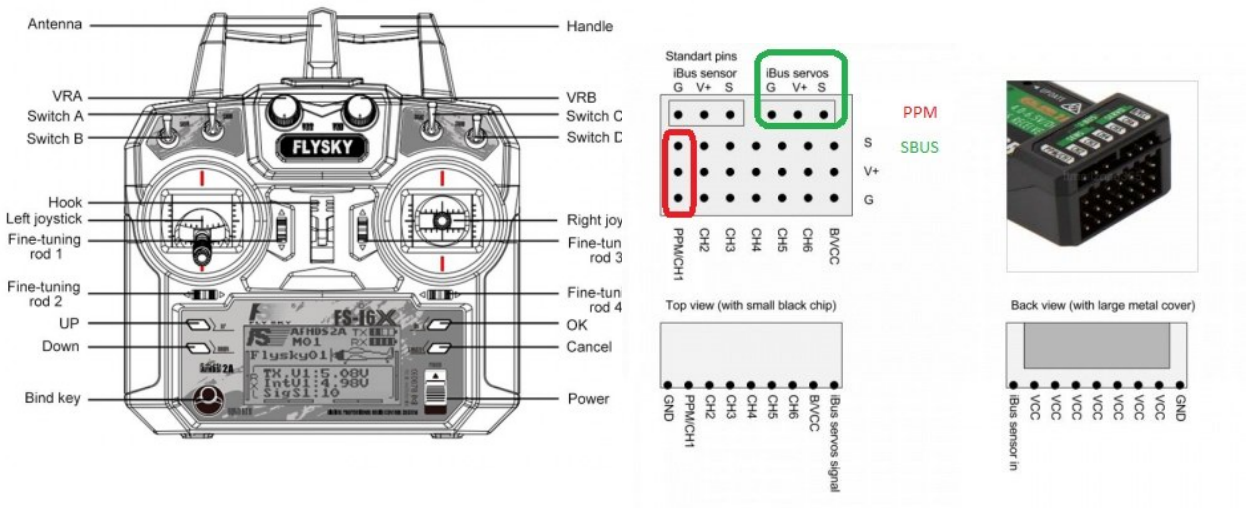

The transmitter and receiver we will use to control the drone

The Flysky FS-i6x transmitter is a popular 6-channel radio transmitter used for remote control of RC (radio-controlled) models such as planes, drones, and cars. It features a compact design, ergonomic grip, and intuitive programming interface, making it a popular choice for hobbyists and enthusiasts.

Some of the key features of the Flysky FS-i6x transmitter include:

1. Six-channel control: The transmitter has six channels that allow you to control various functions of your RC model, such as throttle, steering, and more.

2. 2.4GHz AFHDS 2A technology: The transmitter uses the latest 2.4GHz AFHDS 2A (Automatic Frequency Hopping Digital System) technology, which provides a strong and reliable signal with minimal interference.

3. Dual antenna system: The transmitter has a dual antenna system that ensures a stable and reliable signal even in noisy environments.

4. Backlit LCD screen: The transmitter features a backlit LCD screen that displays real-time telemetry data such as signal strength, battery voltage, and more.

5. Programmable buttons: The transmitter has eight programmable buttons that can be customized to control various functions of your RC model.

6. Compatibility: The Flysky FS-i6x transmitter is compatible with a wide range of RC models and receivers, making it a versatile and flexible option for hobbyists and enthusiasts.

Overall, the Flysky FS-i6x transmitter is a reliable, feature-rich, and affordable option for anyone looking to control their RC models with precision and ease.

A 6000 mAh Li-Po battery can provide up to 6 amps of current for 1 hour, or 1 amp of current for 6 hours, or any combination of current and time that adds up to 6,000 milliampere-hours (mAh). The actual runtime of a device powered by this battery will depend on many factors, such as the device's power consumption, the battery's age and condition, and the temperature and humidity of the operating environment.
It's worth noting that Li-Po batteries require careful handling and charging to avoid the risk of fire or explosion, as they are sensitive to overcharging, overheating, and physical damage. Therefore, it's essential to follow the manufacturer's instructions and use only approved chargers and cables to ensure the safe and reliable operation of the battery.

Lithium Polymer (LiPo) batteries are a popular choice for drone enthusiasts due to their lightweight, high energy density, and low self-discharge rate. Here are some of the reasons why LiPo batteries are a good choice for drones:

2. High Energy Density: LiPo batteries have a high energy density, which means they can store a lot of energy in a small and lightweight package. This is important for drones, as they need to be as light as possible to achieve maximum flight time and maneuverability.

3. Low Self-Discharge Rate: LiPo batteries have a low self-discharge rate, which means they can hold their charge for a long time when not in use. This is important for drone enthusiasts, as it allows them to store their batteries for long periods without worrying about them losing their charge.

4. High Discharge Rate: LiPo batteries have a high discharge rate, which means they can deliver a lot of power quickly. This is important for drones, as they need to be able to provide enough power to lift off the ground and perform acrobatic maneuvers.

5. Flexible Shapes: LiPo batteries can be made in a variety of shapes and sizes, which makes them ideal for use in drones. They can be designed to fit into small spaces, which is important for drones that need to be compact and lightweight.

Overall, LiPo batteries are a great choice for drone enthusiasts due to their high energy density, low self-discharge rate, high discharge rate, and flexible shapes.

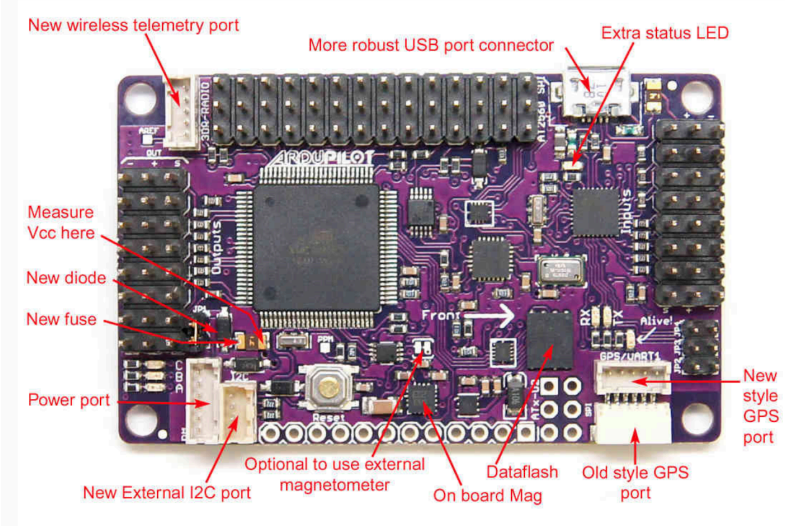

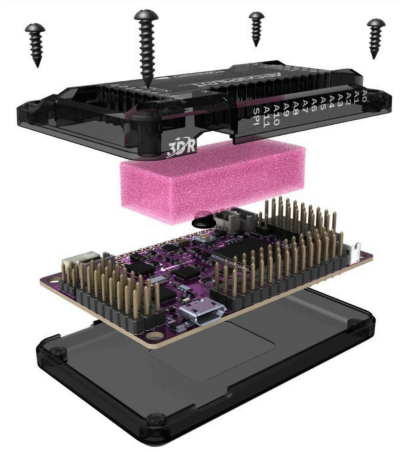

The APM 2.8 is a popular open-source flight controller for multirotor aircraft such as quadcopters, hexacopters, and octocopters. It is based on the Arduino platform and features a powerful 8-bit Atmel AVR microcontroller with an on-board 3-axis accelerometer, 3-axis gyroscope, and 3-axis magnetometer.

Here are some key features of the APM 2.8 flight controller:

1. GPS Compatibility: The APM 2.8 supports GPS modules that allow the aircraft to have GPS-assisted navigation and autonomous waypoint navigation.

2. Flight Modes: The APM 2.8 supports various flight modes such as stabilize, altitude hold, loiter, auto, and RTL (return to launch).

3. Telemetry: The APM 2.8 has a built-in telemetry module that allows the pilot to receive real-time telemetry data from the aircraft such as GPS coordinates, altitude, battery voltage, and more.

4. OSD Compatibility: The APM 2.8 supports on-screen display (OSD) modules that allow the pilot to view real-time flight data such as speed, altitude, and battery voltage on a video monitor or FPV goggles.

5. Onboard Data Logging: The APM 2.8 can record flight data such as GPS coordinates, altitude, and battery voltage on a microSD card for later analysis.

6. Open-Source: The APM 2.8 is an open-source platform, which means that its software is free and open to the public. This allows for community contributions and modifications to the software.

Overall, the APM 2.8 flight controller is a powerful and versatile platform for multirotor aircraft that provides a wide range of features and capabilities. It is a popular choice among hobbyists and professionals alike, and its open-source nature makes it an attractive option for those looking to customize and modify their flight controller software.

Drone ESC

A drone ESC (Electronic Speed Controller) is a device that controls the speed of the electric motor in a drone. It works by receiving signals from the drone's flight controller, which tells it how fast the motor should spin. The ESC then converts the signals into electrical current that regulates the speed of the motor.

1. The ESC also performs several safety functions, such as preventing the motor from spinning too fast, and protecting it from damage due to overcurrent or overheating. Most drone ESCs are programmable, which allows users to adjust settings such as throttle response, motor timing, and braking force.

2. The type of ESC needed for a particular drone will depend on factors such as the size and weight of the drone, as well as the power requirements of the motor. It is important to choose an ESC that is compatible with the drone's motor and battery, and to ensure that it is rated for the correct voltage and current.

Drone firefighting system

A drone water spray system, also known as a drone firefighting system, is a system that uses drones equipped with water tanks and spraying nozzles to fight fires. The system allows firefighters to access difficult-to-reach areas, such as tall buildings, remote forests, and rugged terrain, quickly and efficiently.
The drones are operated remotely by a trained operator who can control the direction and intensity of the water spray from a safe distance. The water tanks on the drones are typically filled with fire retardants, foam, or plain water, depending on the type of fire being fought.
Drone water spray systems have proven to be effective in fighting wildfires and other types of fires, and they can be a valuable addition to a firefighting team's arsenal. They can reduce the risk of injury to firefighters and allow them to respond more quickly and effectively to fire emergencies.

Monitoring System

I. INTRODUCTION

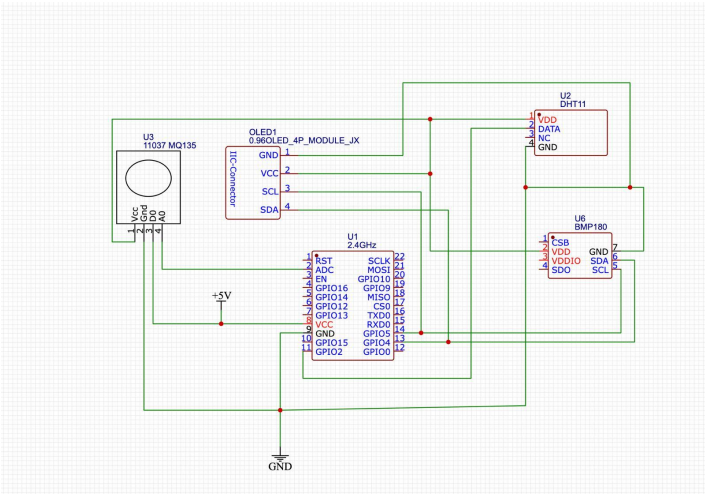

Here we have introduced a smart weather reporting system over the Internet. It allows the people to directly check the weather states online without the need of a weather forecasting agency. System uses temperature, humidity, atmospheric pressure as well as gas sensor to monitor weather and provide live reporting of the weather statistics. The system constantly monitors temperature using temperature sensor, humidity using humidity sensor and air quality using gas sensor. Weather monitoring system deals with detecting and gathering various weather parameters at different locations which can be analysed or used for weather forecasting. The aim of this system is achieved by technologies such as Internet of Things (IOT) and Cloud. The idea of internet of things is to connect a device to the internet and to other required connected devices. Using Internet the information from the IOT device can easily be transferred to the cloud and then from the cloud to the end user. Weather Monitoring is an essential practical implementation of the concept of Internet of Things, it involves sensing and recording various weather parameters and using them for alerts, sending notifications, adjusting appliances accordingly and also for long term analysis. Also we will try to identify and display trends in parameters using graphical representation. The devices used for this purpose are used to collect, organize and display information. It is expected that the internet of things is going to transform the world by monitoring and controlling the phenomenon of environment by using sensors/devices which are able to capture, process and transmit weather parameters. Cloud is availability of computer system resources like data storage, computing power without direct active management of user. The data captured is transmitted to the cloud so that the data could be further displayed. Besides this, the system consists of components such as

ESP8266(Wifi Module) which is a microcontroller board consisting of 18 digital (input / output) pins, a USB connection and everything used to support microcontroller and is used to convert the data collected from the sensors and then send it to the web server.r; DHT11 is Temperature and humidity sensor which is used for detecting these mentioned parameters, BMP 180 is used to measure altitude and atmospheric pressure, MQ 35 for checking air quality. So, in this way weather conditions of any location can be monitored from any remote location in the world. The system constantly transmits this data to the micro controller which now processes this data and keeps on transmitting it to the online web server over a wifi connection. This data is live updated to be viewed on the online server system.

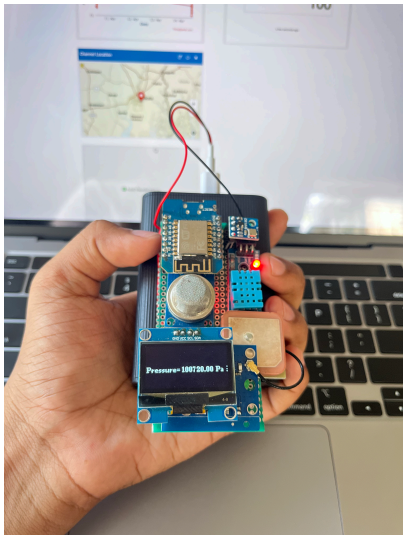

OBJECTIVES

• Create a weather-monitoring system that monitors temperature, humidity, altitude, atmospheric pressure and air quality.

• Create a system that uses the cloud to store weather data over time. • Analyze the sensor data that has been obtained.

II. MOTIVATION

In existing system, the weather stations are built in very small scale with on few sensors which display locally. A very few parameters are considered like temperature, humidity, and barometric pressure. The data collected is not stored in database for future references which becomes really for users to view historical data of the parameters. Data is visualized in an external platform or locally and not a determined platform

Disadvantages

1. Veryfewparametersareconsidered.
2. Dataisnotstoredforfuturereferences.
3. Adedicatedplatformforthepersonalizedweatherstationisnotbuilt.

III. BENEFITS

- • Decreased field damaging conditions
- • Improved safety and security
- • High-quality receiving data
- • Less power consumption
- • Accuracy is High
- • Smart way to monitor Environment
- • Low cost and less efforts

- ## COMPONENTS LIST

COMPONENTS

ESP 8266 (D1 Mini)
DHT 11
BMP 180
MQ 135
OLED Display
Glass PCB

V. BLOCK DIAGRAM

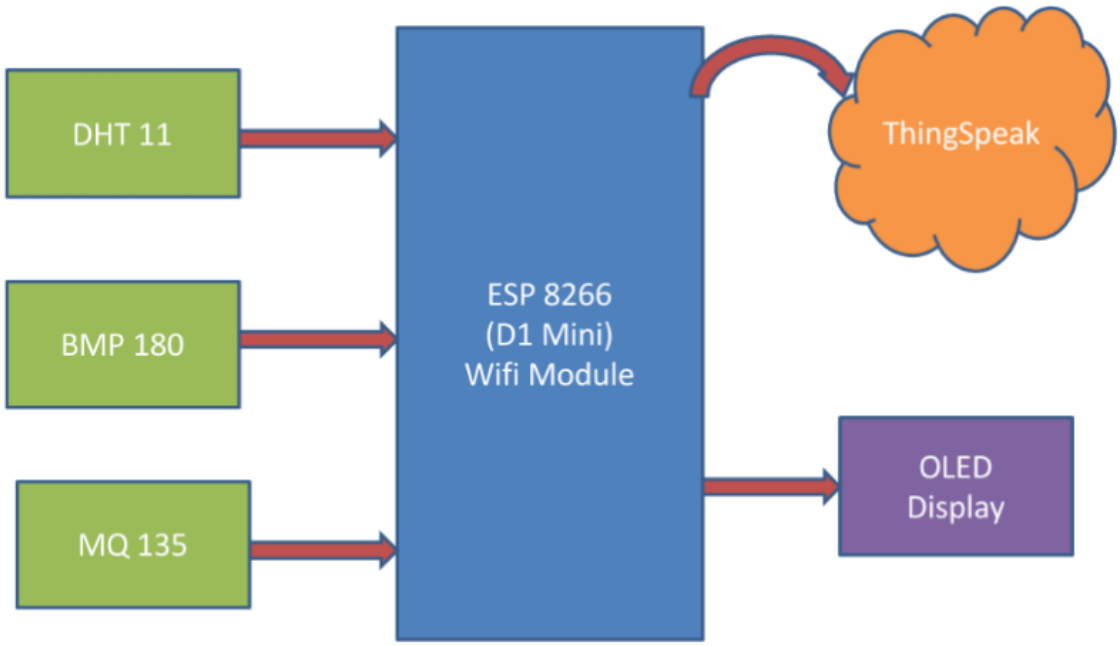

VI. DETAILED DESCRIPTION OF COMPONENTS

1) DHT 11 (Temperature & Humidity Sensor):

The DHT-11 Digital Temperature and Humidity Sensor is a basic, ultra-low-cost digital temperature and humidity sensor. It uses a capacitive humidity sensor and a thermistor to measure the surrounding air and spits out a digital signal on the data pin (no analog input pins needed).

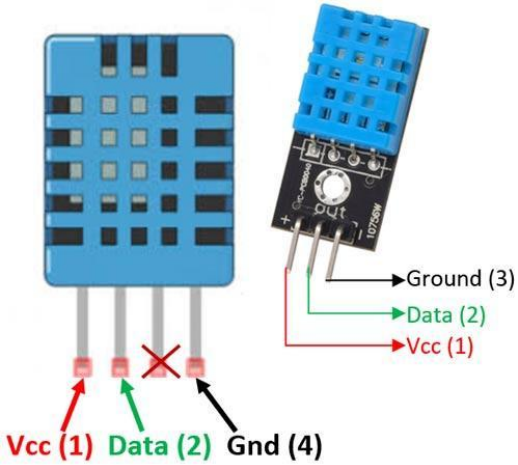

1.1) PinConfiguration:

Pin Name	Description
VCC	Power Supply
Data	Connected to pin11(GPIO2) of ESP8266
NC	Not Connected
GND	Ground connection

1.2) DHT11 Specifications:

- Operating Voltage: 3.5V to 5.5V
- Operating current: 0.3mA (measuring) 60uA (standby)
- Output: Serial data
- Temperature Range: 0°C to 50°C
- Humidity Range: 20% to 90%
- Resolution: Temperature and Humidity both are 16-bit
- Accuracy: ±1°C and ±1%

2) BMP 180 (Atmospheric Sensor):

BMP180 is an atmospheric pressure sensor which is used to **measure Barometric Pressure** or **Atmospheric pressure**. BMP180 is a high precision sensor designed for consumer applications. Barometric Pressure is nothing but weight of air applied on everything. The air has weight and wherever there is air its pressure is felt. **BMP180 sensor** senses that pressure and provides that information in digital output. Also the temperature affects the pressure and so we need temperature compensated pressure reading. To compensate, the BM180 also has good temperature sensor.

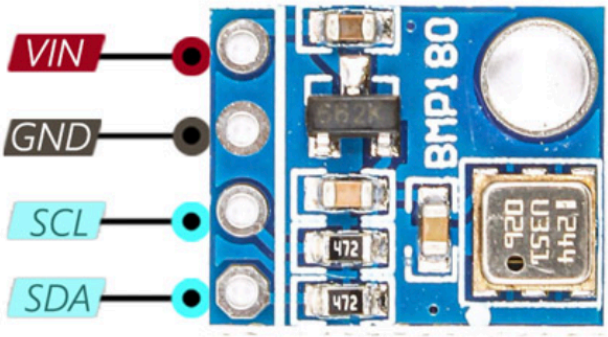

2.1) BMP180 MODULE Specifications

- Operating voltage of BMP180: 1.3V – 3.6V
- Input voltage of BMP180MODULE: 3.3V to 5.5V
- Peak current : 1000uA
- Consumes 0.1uA standby
- Maximum voltage at SDA , SCL : VCC + 0.3V
- Operating temperature: -40oC to +80oC

2) BMP180 Pin Configuration:

Pin Name	Description
VCC	Power Supply
GND	Ground Connection
SDA	Connected to pin13 (GPIO4) of ESP8266
SCL	Connected to pin14 (GPIO5) of ESP8266

3) MQ 135 (Gas Sensor):

The **MQ-135 Gas sensor** can detect gases like Ammonia (NH3), sulfur (S), Benzene (C6H6), CO2, and other harmful gases and smoke. Similar to other MQ series gas sensor, this sensor also has a digital and analog output pin. When the level of these gases go beyond a threshold limit in the air the digital pin goes high. This threshold value can be set by using the on-board potentiometer. The analog output pin, outputs an analog voltage which can be used to approximate the level of these gases in the atmosphere.

The digital output pin of the sensor can be used to detect harmful gases in the environment. The sensitivity of the digital pin can be controlled by using the 10k potentiometer. If the gas is detected the indicator LED D0 will turn on and the digital pin will go from logic high to logic low (0V). The LM393 Op-Amp Comparator IC is used to compare the actual gas value with the value set using the potentiometer. If the actual gas value increases than the set value then the digital output pin gets low.

Because of the onboard LM393 comparator IC the MQ135 Gas sensor module can also be used without the need of an external microcontroller. Simply power up the module and set the sensitivity of the digital pin using the potentiometer, then when the module detects the gas the digital pin will go low. This digital pin can directly be used to drive a buzzer or LED with the help of simple

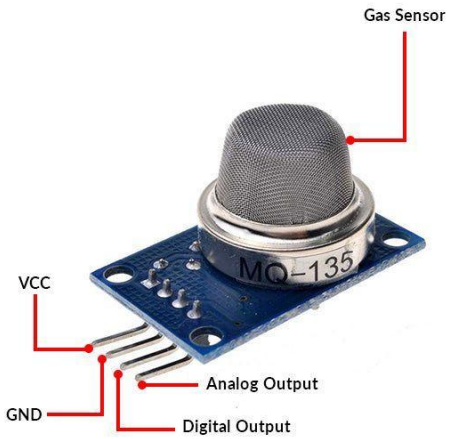

transistors.

3.1) Specifications of MQ135 Gas Sensor

- ● Operating Voltage: 2.5V to 5.0V
- ● Power consumption: 150mA
- ● Detect/Measure: NH3, Nox, CO2, Alcohol, Benzene, Smoke
- ● Typical operating Voltage: 5V
- ● Digital Output: 0V to 5V (TTL Logic) @ 5V Vcc
- ● Analog Output: 0-5V @ 5V Vcc

3.2) MQ 135 Pin Configuration:

Pin Name	Description
VCC	Connected to VCC pin of DHT11
GND	Ground Connection
Digital	Connected to VCC of ESP8266
Analog Out(A0)	Connected to pin2 (ADC) of ESP8266

4) ESP8266 (D1 Mini):

A WeMos D1 Mini is a small Wi-Fi-enabled board based on the ESP8266 chip. It has 18 digital input/output pins (of which 4 can be used as PWM outputs), a micro USB port, a power jack, an ICSP header and a reset button. The WeMos D1 Mini is a great way to get started with ESP8266 development.

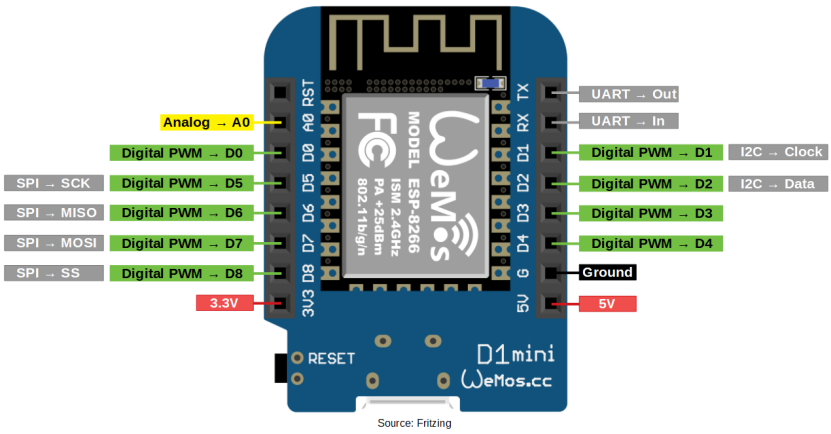

The WeMos D1 Mini is perfect for prototyping and for building IoT applications. The board is very similar to the popular NodeMCU board but with a smaller form factor.

When it comes to electronics, the WeMos D1 Mini is a true powerhouse. This tiny little board has a massive amount of pinouts and capabilities, making it the perfect choice for a wide range of projects. WeMos D1 mini has a whopping 16 GPIO pins. This means that we can easily connect a wide range of devices and components to the board.

4.1) Pin Configuration

No. of	Label	Description
1	3.3V	3.3 volt pin
1	5.0	Input 5V voltage pin
1	GND	Ground pin
1	ADC	10-bit Analog to Digital Converter
1	RST	Reset Pin
9	D0 to D8	Input/Output pins are used for SPI and I2C, Flash
2	RX, TX	UART interface

5) IOT Platform (Thing Speak):

According to its developers, “Thing Speak” is an open source Internet of Things (IOT) application and API to store and retrieve data from things using the HTTP protocol over the Internet or via a Local Area Network. Thing Speak enables the creation of sensor logging applications, location tracking applications, and a social network of things with status updates". Thing Speak has integrated support from the numerical computing software MATLAB from MathWorks allowing Thing Speak users to analyze and visualize uploaded data using Matlab without requiring the purchase of a Matlab license from Mathworks. In a nutshell:-

a) Data is sent to the cloud via the Think Talk platform from any Internet-connected device.

b) We can then set up actions and alerts based on our realtime data and use visual tools to uncover the value of your data.

c) Make use of ThinkSpeak, which provides a framework for developers to simply take sensor data and transform it into usable information.

d) Thing Speak is an open data platform and API for the Internet of Things that allows you togather, store, analyse, visualise, and act on sensor data.

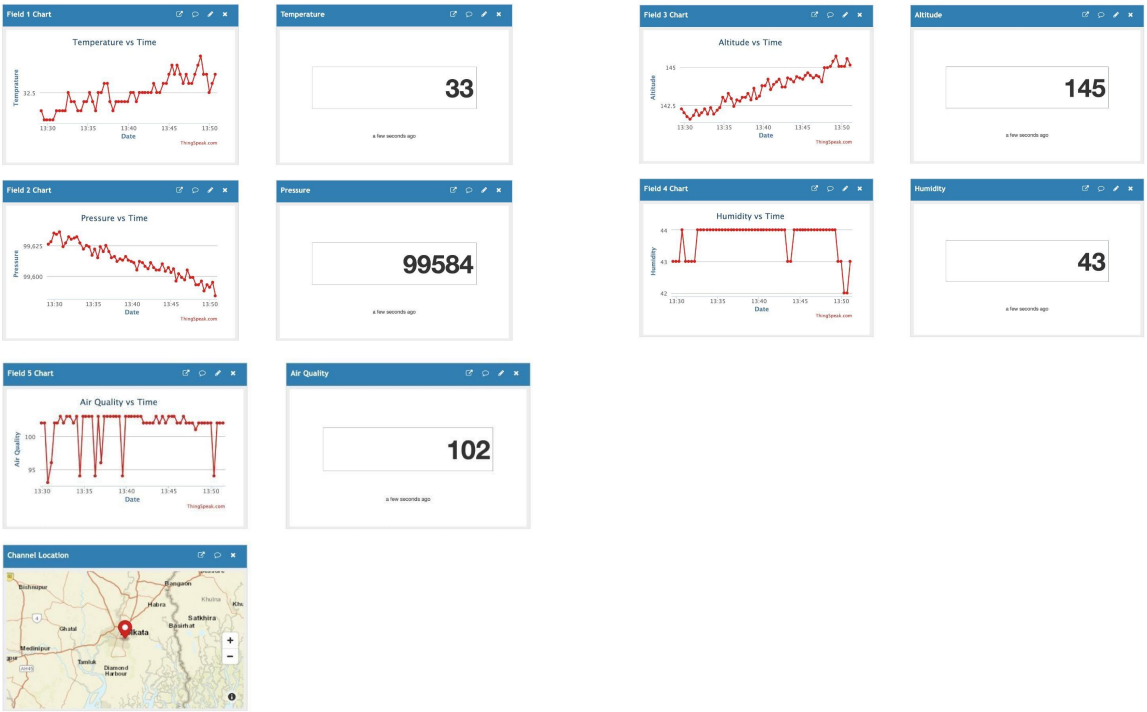

6) OLED Display:

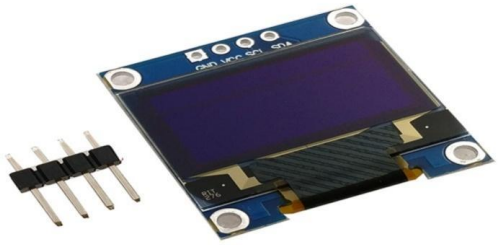

OLED (Organic Light Emitting Diodes) is a flat light emitting technology, made by placing a series of organic thin films between two conductors. When electrical current is applied, a bright light is emitted. OLEDs are emissive displays that do not require a backlight and so are thinner and more efficient than LCD displays (which do require a white backlight).

Features :-

- ● Improved image quality - good contrast, high brightness, full viewing angle, a wide color range and fast refresh rates.
- ● Low power consumption.
- ● Simple design that enables ultra-thin, flexible, foldable and transparent displays
- ● Good durability - OLEDs are very durable and can operate in a broader temperature range

The above 1.3 inch OLED Display consists of 4 pins- GND, VCC, SCL and SDA.

- ## 6.1) Pin Configuration:

Pin Name	Description
VCC	Power Supply
GND	Ground Connection
SCL	Connected to pin14 (GPIO5) of ESP8266
SDA	Connected to pin13 (GPIO4) of ESP8266

7) GPS Module:

The Global Positioning System (GPS) is a satellite based navigation system that provides location and time information. The system is freely accessible to anyone with a GPS receiver and unobstructed line of sight to at least four of GPS satellites. A GPS receiver calculates its position by precisely timing the signals sent by GPS satellites. GPS is nowadays widely used and also has become an integral part of smart phones.

The GTPA010 module is easy to use, having RS232 as well as USB interface. It operates over 3.2 to 5V supply range thus enabling interfacing with microcontrollers with 3.3V as well as 5V. The module outputs GPS data in NMEA0183 format. Each of message string starts with '$' and then the message identifier. Each parameter is separated using a comma so that the message can be parse with the help of the commas.

Pins Rx, Tx connected to Rx, Tx pins of ESP8266.