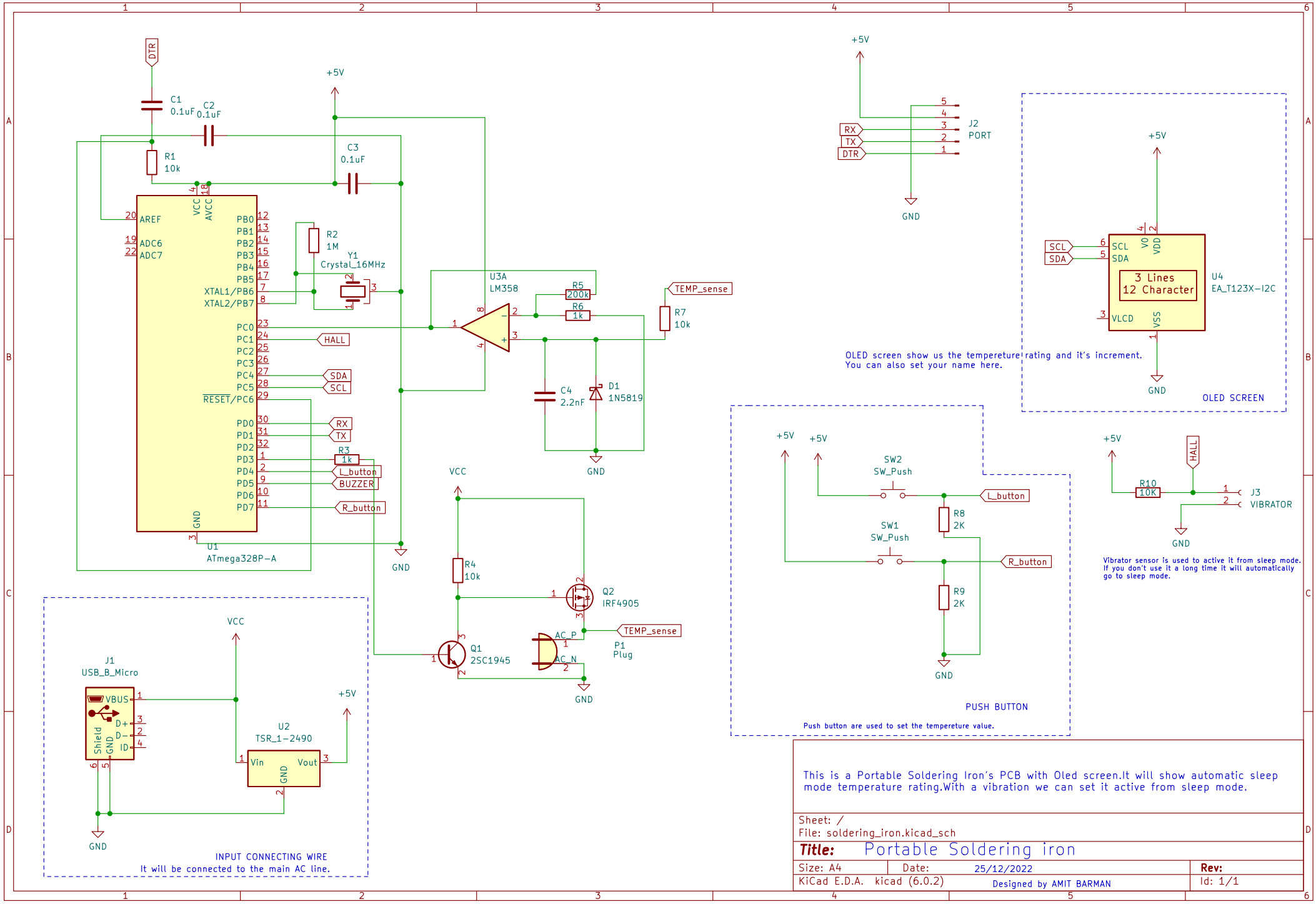

This is a Portable Soldering Iron's PCB with Oled screen.It will show automatic sleep mode temperature rating.With a vibration we can set it active from sleep mode.

Sheet: /
File: soldering_iron.kicad_sch

Title: Portable Soldering iron

Size: A4	Date: 25/12/2022	Rev:
KiCad E.D.A. kicad (6.0.2)	Designed by AMIT BARMAN	Id: 1/1