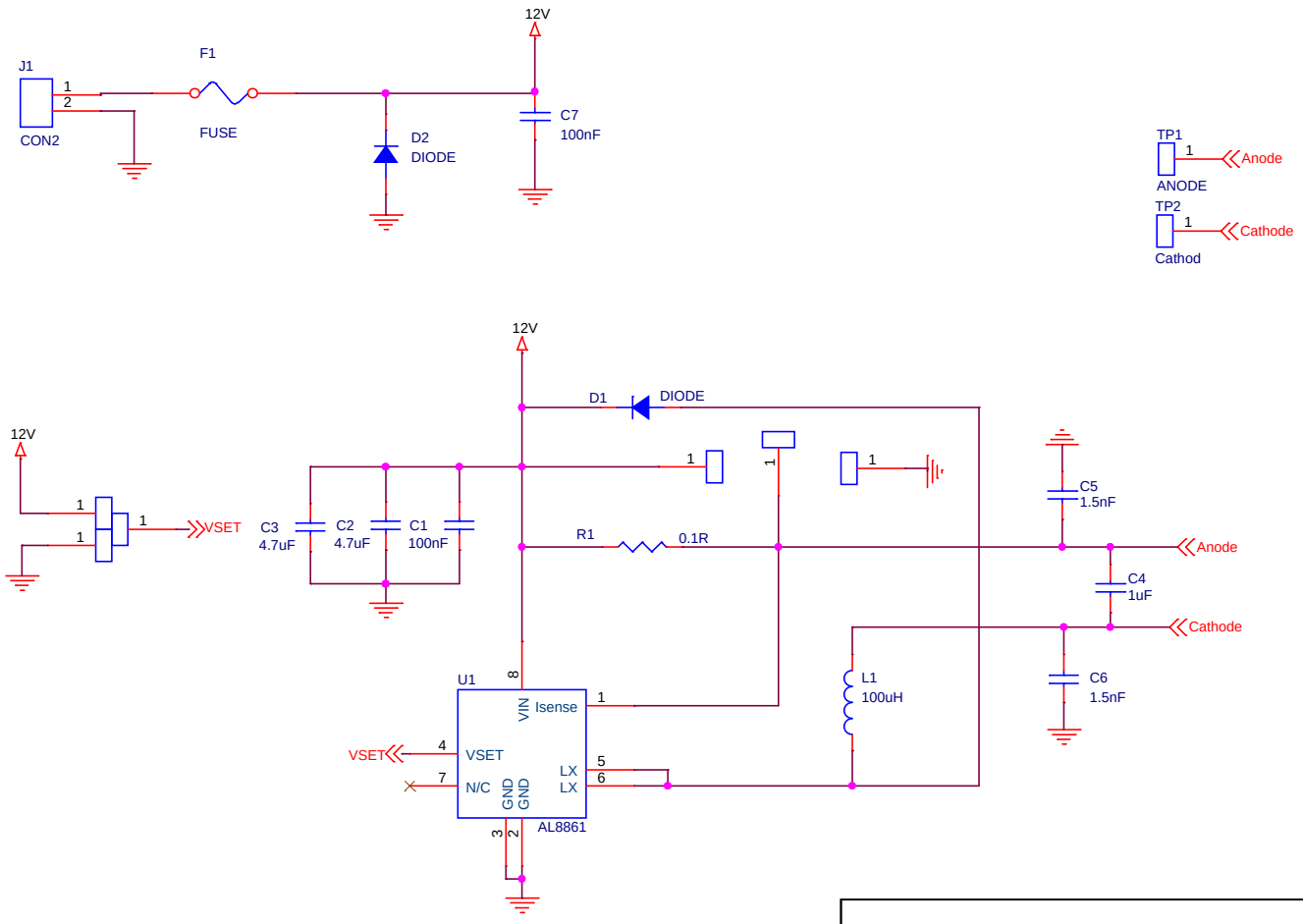

Title	<Title>	
Size A	Document Number <Doc>	Rev <RevCo
Date: Sunday, August 27, 2023	Sheet 1 of 1	