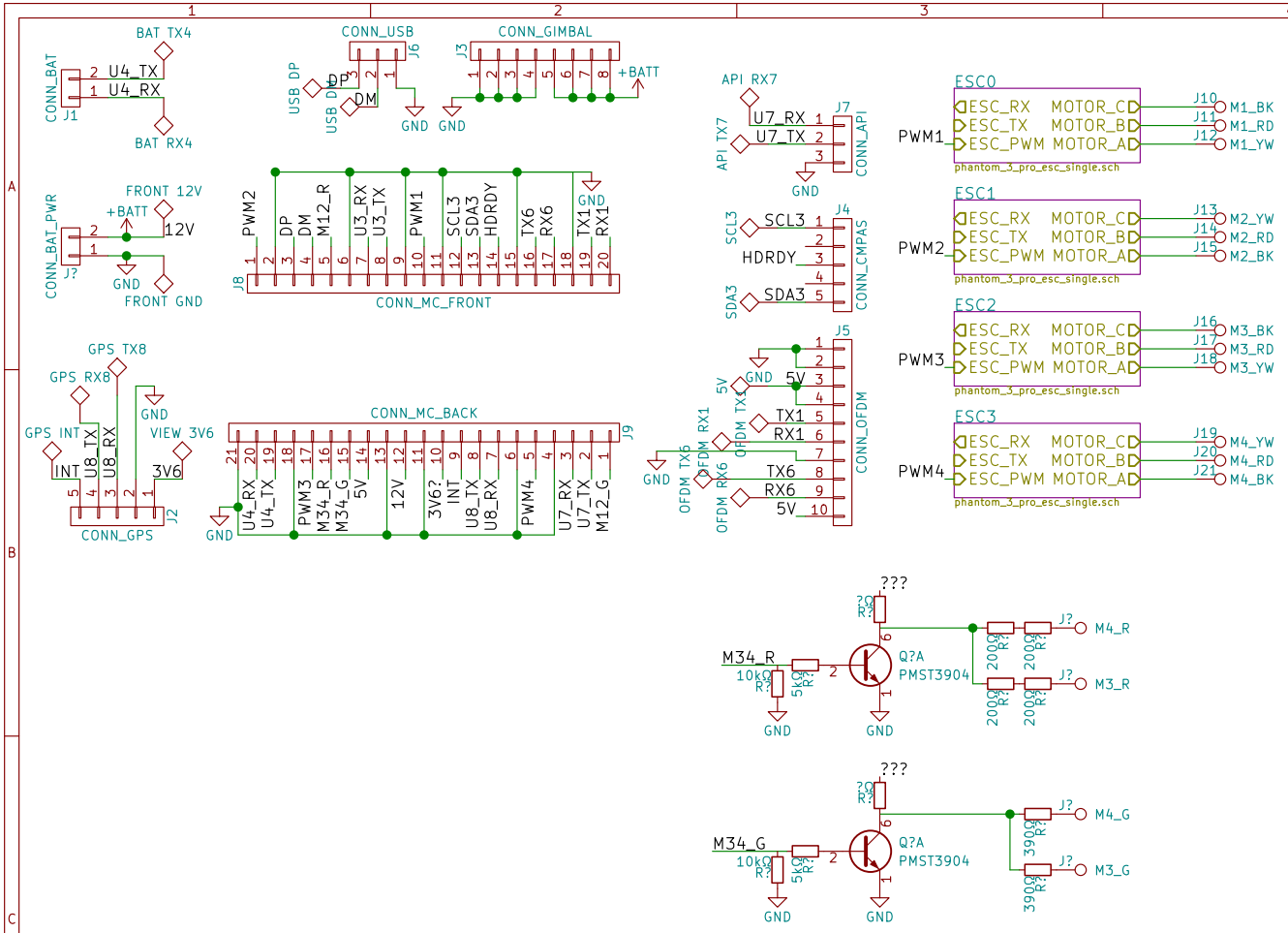

The schematic was not verified with any real board.
It is made based of TI reference designs.
This schematic is guaranteed to be inaccurate.

Dji / by community

Sheet: /
File: phantom_3_pro_esc_center_board.sch

Title: Phantom 3 ESC center board

Size: A4	Date:	**Rev: 0.1**
KiCad E.D.A. kicad 4.0.6		Id: 1/5