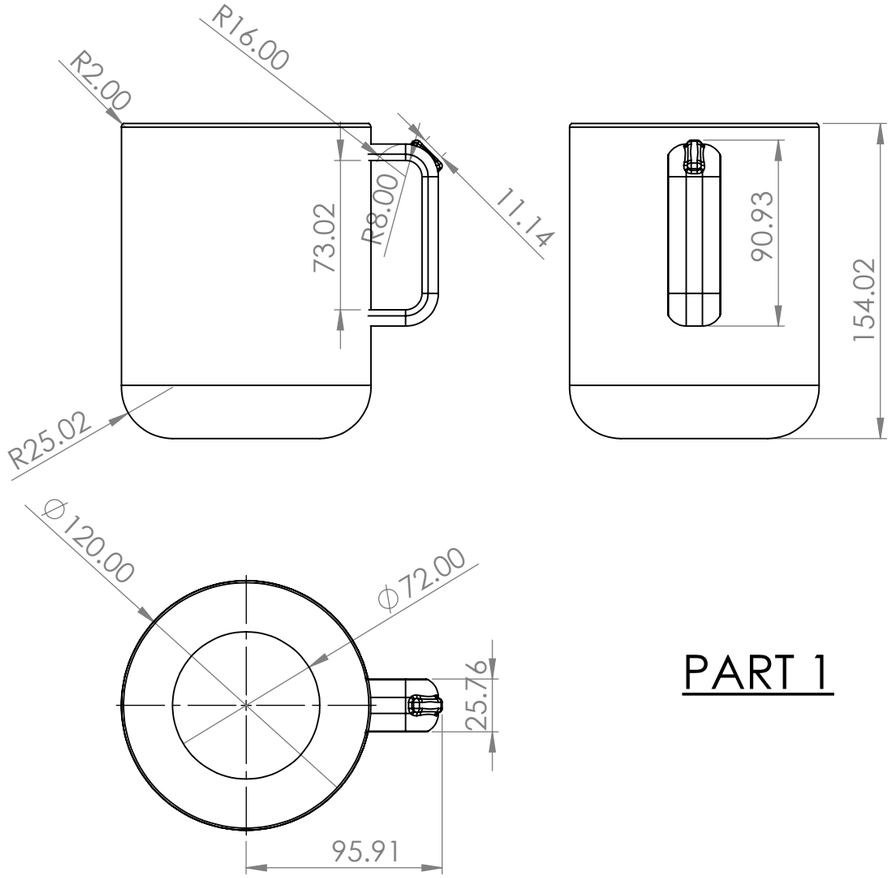

PART 1

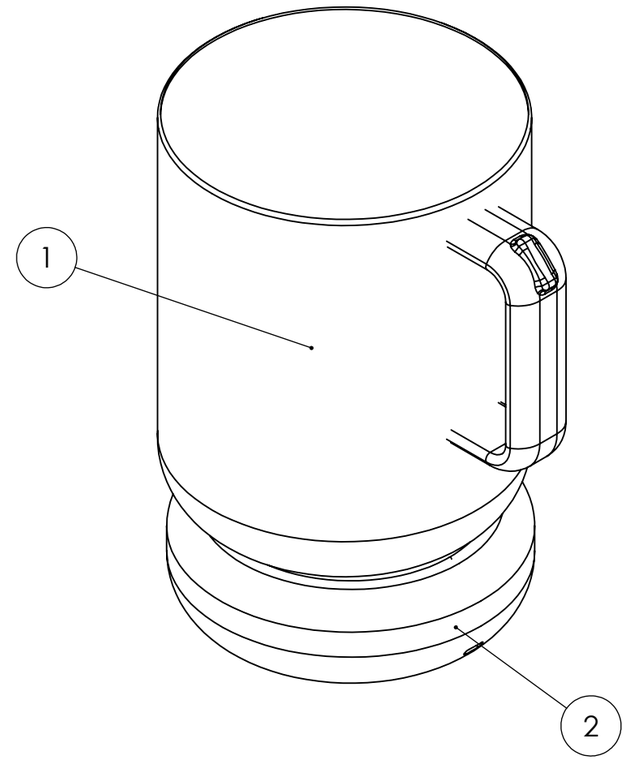

PART 2

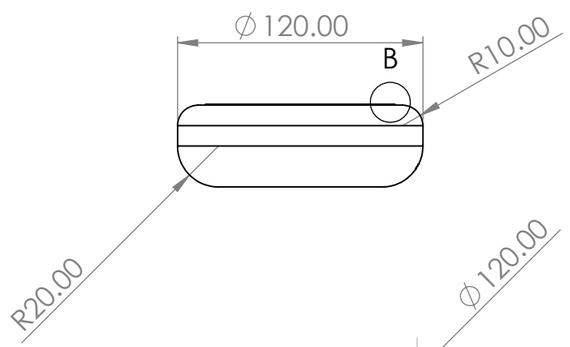

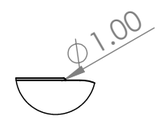

DETAIL B
SCALE 2 : 3

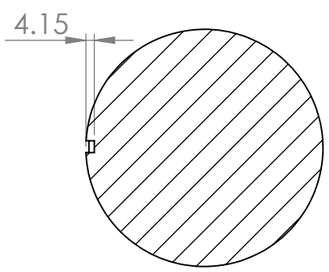

SECTION E-E
SCALE 1 : 3

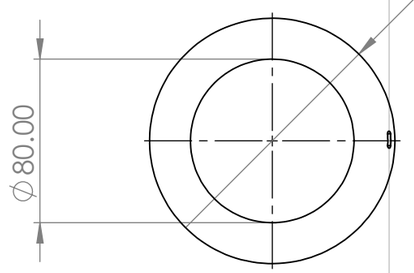

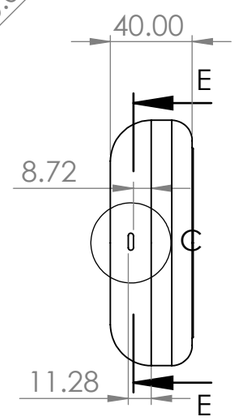

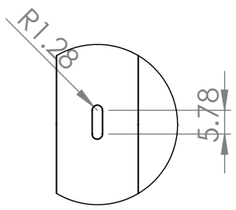

DETAIL C
SCALE 2 : 3

SMART HEATING MUG		
BILL OF MATERIALS		
ITEM NO:	ITEM NAME	QTY
1	COFFEE MUG	1
2	HEATER	1
DESCRIPTION		
DESIGNED BY	AMMAR BIN HASHIM	
M6B14		
DEPARTMENT OF MECHANICAL ENGINEERING , TKMCE		
A3	SCALE: 1:3	MM