+−30V Input Max

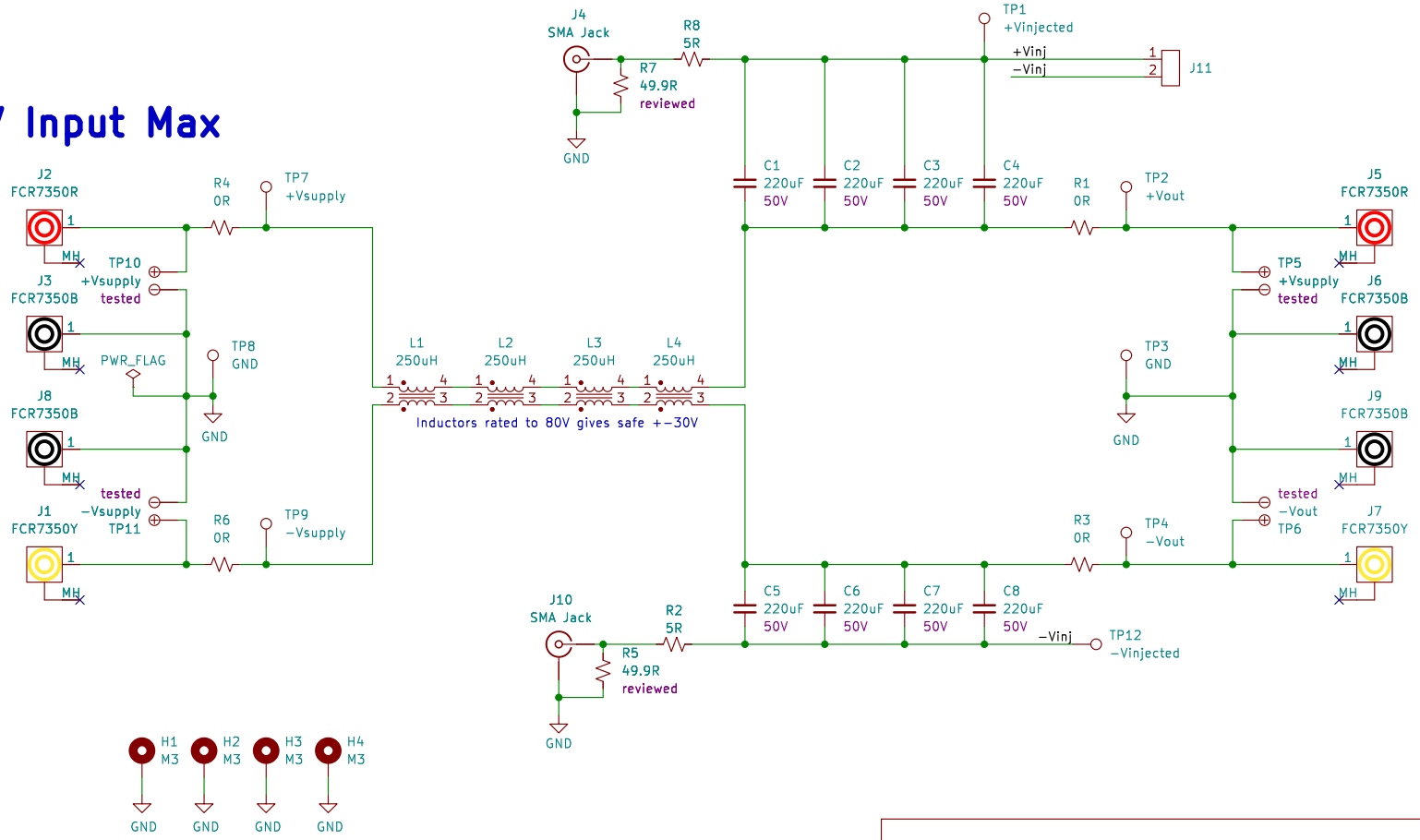

Amodo Design

DRAWN BY: Thom Cousins	DRAWN DATE: 16/06/2025
CHECKED BY: Sam Maxwell	CHECKED DATE: 18/06/2025

Title: AMODO_PSRR_INJECTOR_CBs_1

SIZE: A4	SHEET: /	**Rev: 1.0.0**
CLIENT: Internal	PROJECT: INTERNAL	Id: 1/1