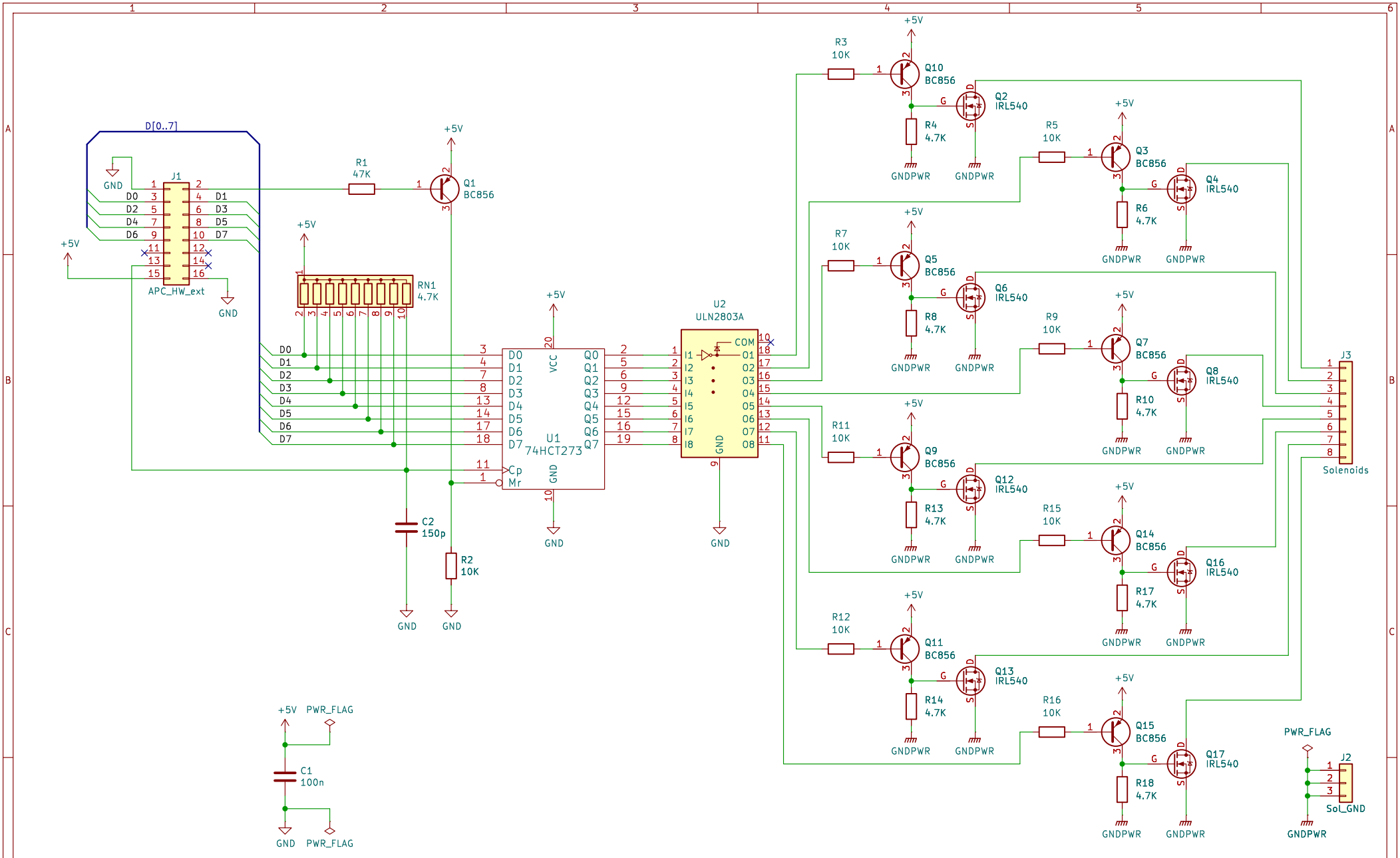

Sheet: /
File: APC_Solenoid_exp2.kicad_sch

Title: Solenoid expander with separated grounds

Size: A4	Date: 2025-11-10	Rev:
KiCad E.D.A. 9.0.6		Id: 1/1