REVISION HISTORY

Revision	Description	Date	Drawn	Checked
Ver 0.5	Initial Version	2016-12-26	HJ	
Ver 0.8		2017-04-10	HJ	

Schematics Index:

P01: REVISION HISTORY
P02: BLOCK
P03: POWER TREE
P04: GPIO ASSIGNMENT
P05: SOC1
P06: SOC2
P07: DDR3 16X2
P08: POWER
P09: NAND-eMMC
P10: CARD-USB-IR-SPDIF
P11: KEY-LED-ETH-DEBUG
P12: AV-HDMI
P13: WIFI-BT 2T2R
P14: WIFI-BT 1T1R

AllWinner Technology Co.,Ltd
Design Name: H6-PROTO
Size: A3 | Page Name: REVISION HISTORY | Rev: 0.1
Date: Friday, November 24, 2017 | Sheet 1 of 14

BLOCK

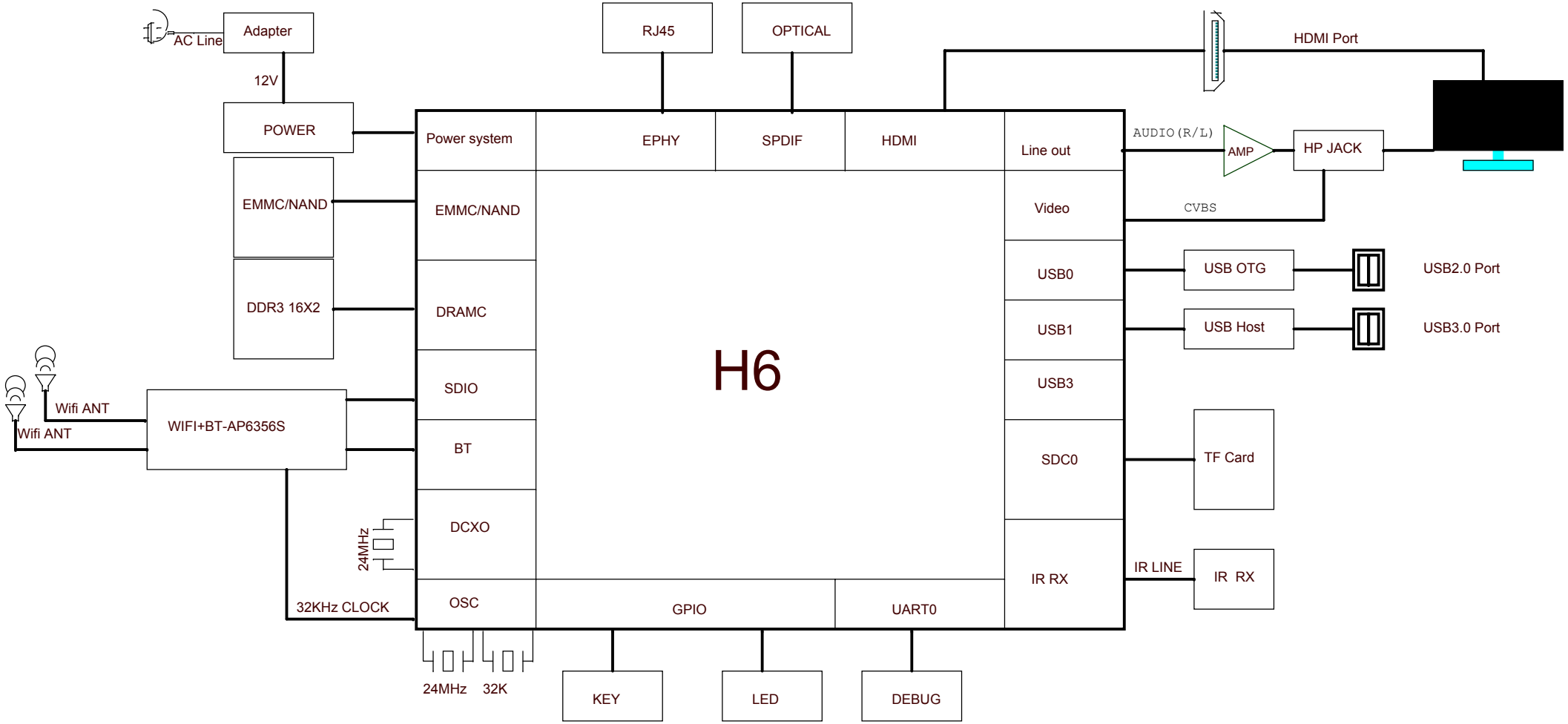

AllWinner Technology Co.,Ltd	
Design Name	H6-PROTO
Size A3 / Page Name	BLOCK / Rev <RevCode>
Date: Friday, November 24, 2017	Sheet 2 of 14

POWER TREE

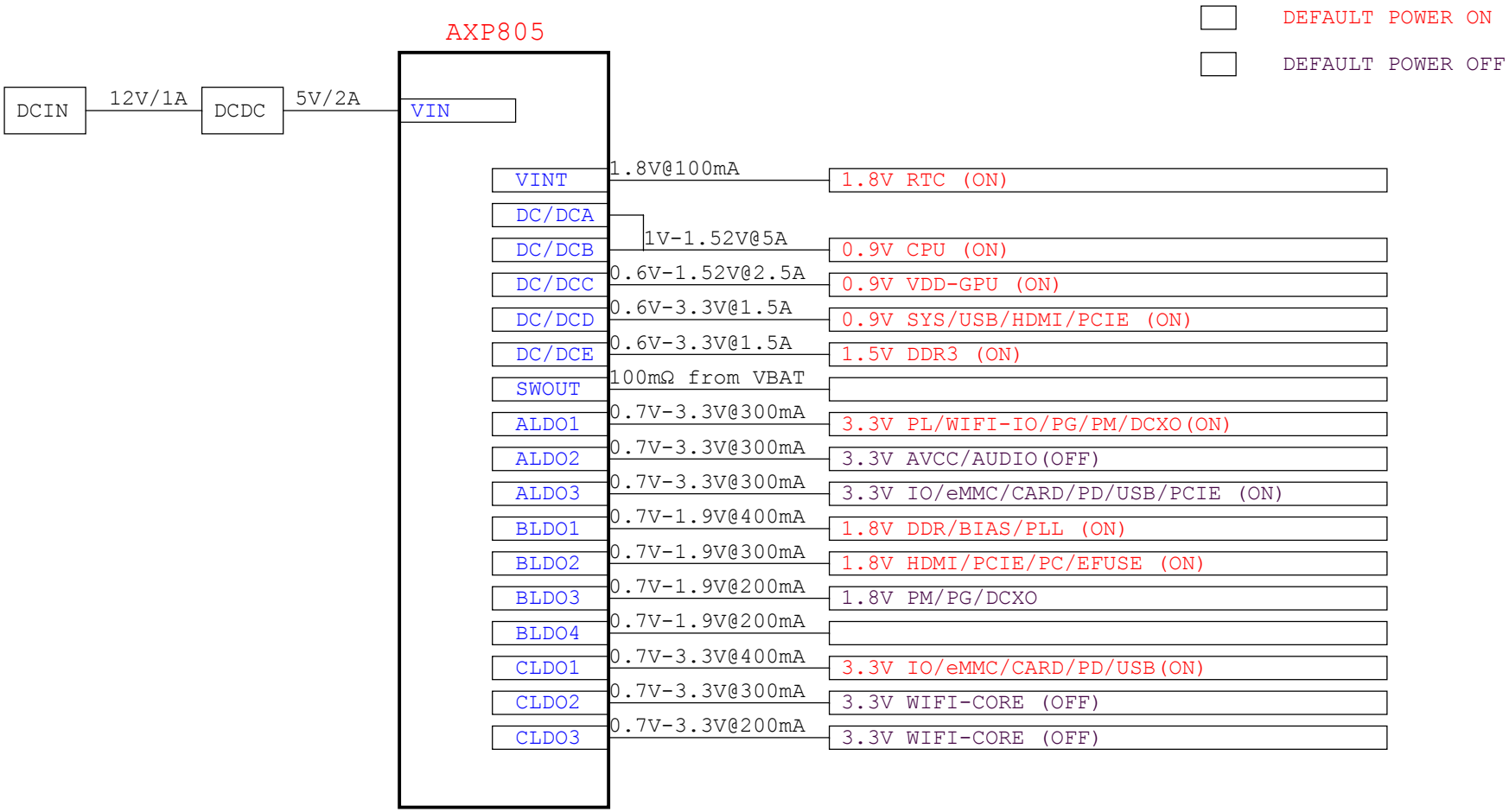

AllWinner Technology Co.,Ltd	
Design Name	H6-PROTO
Size A3 / Page Name	POWER TREE
Rev	<RevCode>
Date: Friday, November 24, 2017	Sheet 3 of 14

GPIO ASSIGNMENT

PIN	Define	CFG	Function
PC0	NAND_WE	2	NAND/eMMC
PC1	NAND_ALE/SDC2_DS	2/3	
PC2	NAND_CLE	2	
PC3	NAND_CE0	2	
PC4	NAND_RE/SDC2_CLK	2/3	
PC5	NAND_RB0/SDC2_CMD	2/3	
PC6	NAND_DQ0/SDC2_D0	2/3	
PC7	NAND_DQ1/SDC2_D1	2/3	
PC8	NAND_DQ2/SDC2_D2	2/3	
PC9	NAND_DQ3/SDC2_D3	2/3	
PC10	NAND_DQ4/SDC2_D4	2/3	
PC11	NAND_DQ5/SDC2_D5	2/3	
PC12	NAND_DQ6/SDC2_D6	2/3	
PC13	NAND_DQ7/SDC2_D7	2/3	
PC14	NAND_DQS/SDC2_RST	2/3	
PC15	NAND_CE1	2	
PC16	NAND_RB1	2	

PIN	Define	CFG	Function
PD0			
PD1			
PD2			
PD3			
PD4			
PD5			
PD6			
PD7			
PD8			
PD9			
PD10			
PD11			
PD12			
PD13			
PD14			

PIN	Define	CFG	Function
PD15			
PD16			
PD17			
PD18			
PD19			
PD20			
PD21			
PD22			
PD23			
PD24			
PD25			
PD26			

PIN	Define	CFG	Function
PG0	SDC1_CLK	2	WIFI+BT
PG1	SDC1_CMD	2	
PG2	SDC1_D0	2	
PG3	SDC1_D1	2	
PG4	SDC1_D2	2	
PG5	SDC1_D3	2	
PG6	UART1_TX	2	
PG7	UART1_RX	2	
PG8	UART1_RTS	2	
PG9	UART1_CTS	2	
PG10	PCM2_SYNC	2	
PG11	PCM2_CLK	2	
PG12	PCM2_DOUT	2	
PG13	PCM2_DIN	2	
PG14			

PIN	Define	CFG	Function
PF0	SDC0_D1	2	CARD0
PF1	SDC0_D0	2	
PF2	SDC0_CLK/UART0_TX	2/3	
PF3	SDC0_CMD	2	
PF4	SDC0_D3/UART0_RX	2/3	
PF5	SDC0_D2	2	
PF6	SDC0-DET	2	

PIN	Define	CFG	Function
PH0	CPUX-UTX	2	
PH1	CPUX-URX	2	
PH2			
PH3			
PH4			
PH5			
PH6			
PH7	SPDIF_OUT	3	
PH8	HSCL	2	HDMI
PH9	HSDA	2	
PH10	HCEC	2	

PIN	Define	CFG	Function
PL0	PMU-SCK	3	
PL1	PMU-SDA	3	
PL2	RECOVERY	2	
PL3	LINK-LED	1	
PL4	PWR-LED	1	
PL5	USB0-DRVVBUS	1	
PL6	MUTE	1	
PL7	STATUS-LED	1	
PL8			
PL9	IR-RX	2	
PL10	BT-WIFI-ON	1	
PM0	WL-WAKE-AP	0	WIFI+BT
PM1	BT-WAKE-AP	0	
PM2	AP-WAKE-BT	1	
PM3	WL-REG-ON	1	
PM4	BT-REG-ON	1	

AllWinner Technology Co.,Ltd

Design Name: H6-PROTO

Size: A3 | Page Name: GPIO ASSIGNMENT | Rev: <RevCode>

Date: Friday, November 24, 2017 | Sheet 4 of 14

PC,PD, 部分IO口不具备中断功能
PF,PG,PH,PL,PM，部分IO口有中断功能

AllWinner Technology Co.,Ltd		
Design Name: H6-PROTO		
Size: A3	Page Name: SOC1	Rev: <RevCode>
Date: Friday, November 24, 2017	Sheet 5 of 14	

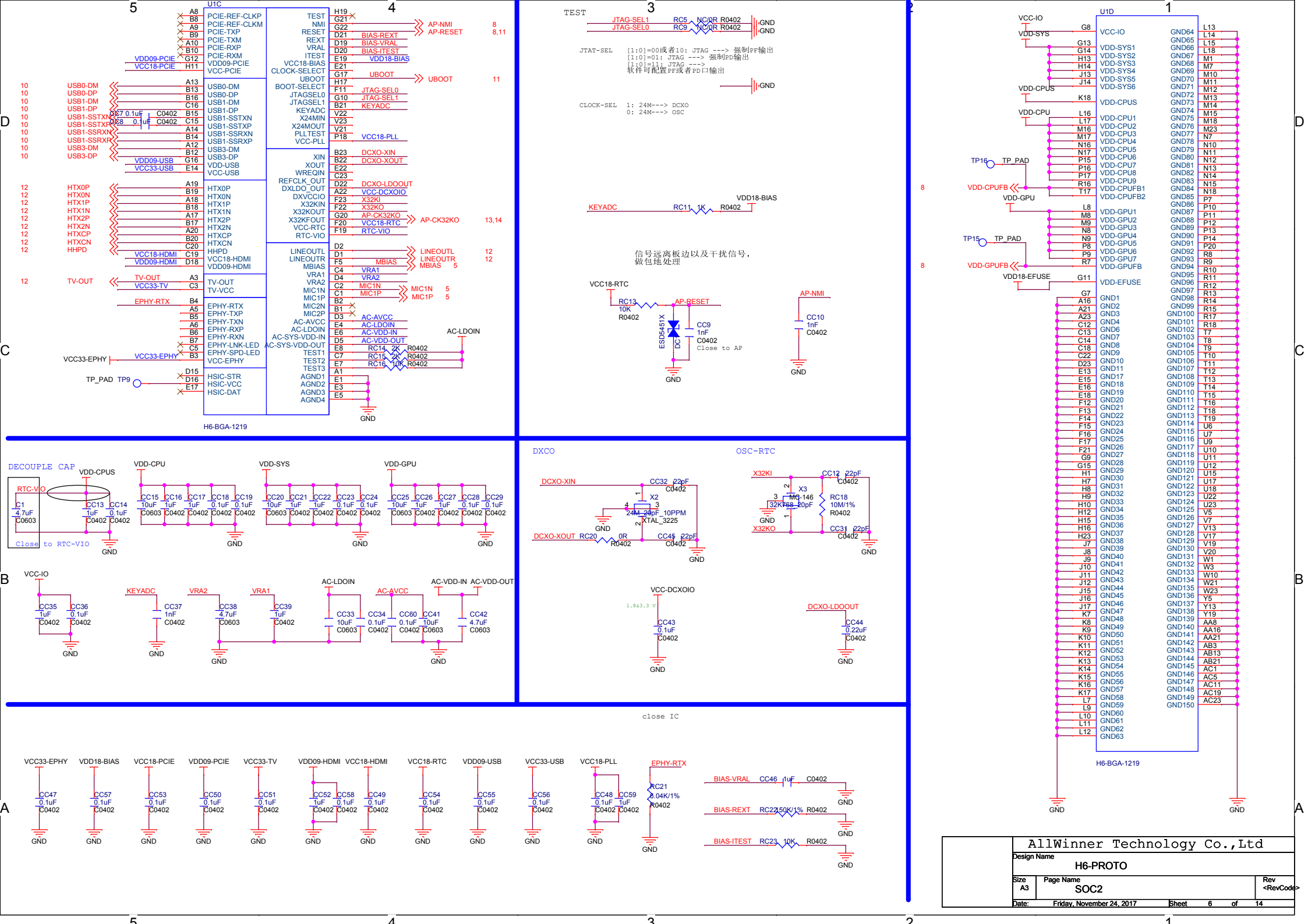
U1C
H6-BGA-1219
TEST
JTAG-SEL1
JTAG-SEL0
JTAT-SEL [1:0]=00或者10: JTAG ---> 强制PF输出
[1:0]=01: JTAG ---> 强制PD输出
[1:0]=11: JTAG --->
软件可配置PF或者PD口输出
CLOCK-SEL 1: 24M---> DCXO
0: 24M---> OSC
KEYADC
VDD18-BIAS
信号远离板边以及干扰信号，
做包地处理
VCC18-RTC
AP-RESET
AP-NMI
ESD5451X
Close to AP
U1D
H6-BGA-1219
DECOUPLE CAP
VDD-CPUS
VDD-CPU
VDD-SYS
VDD-GPU
RTC-VIO
Close to RTC-VIO
DXCO
OSC-RTC
DCXO-XIN
DCXO-XOUT
X32KI
X32KO
VCC-IO
KEYADC
VRA2
VRA1
AC-LDOIN
AC-AVCC
AC-VDD-IN
AC-VDD-OUT
VCC-DCXOIO
DCXO-LDOOUT
close IC
VCC33-EPHY
VDD18-BIAS
VCC18-PCIE
VDD09-PCIE
VCC33-TV
VDD09-HDMI
VCC18-HDMI
VCC18-RTC
VDD09-USB
VCC33-USB
VCC18-PLL
EPHY-RTX
BIAS-VRAL
BIAS-REXT
BIAS-ITEST
AllWinner Technology Co.,Ltd
Design Name
H6-PROTO
Size
A3
Page Name
SOC2
Rev
<RevCode>
Date: Friday, November 24, 2017
Sheet 6 of 14

LPDDR3

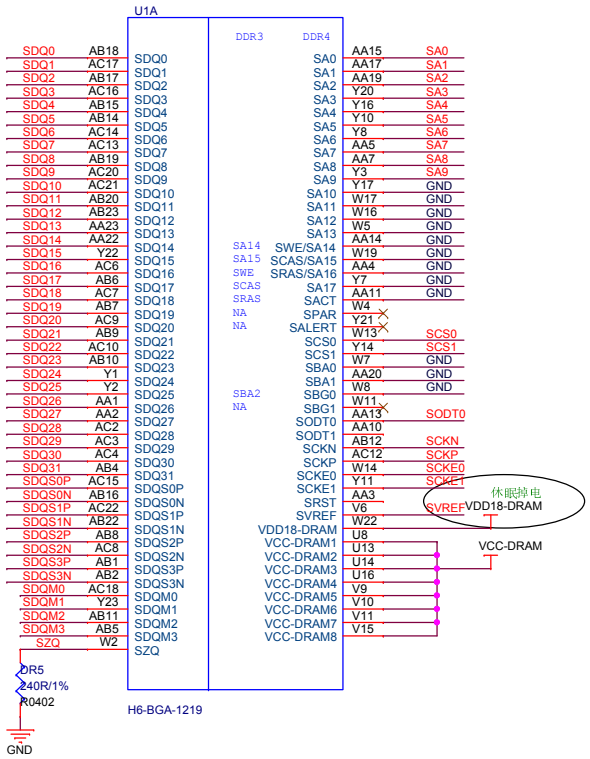

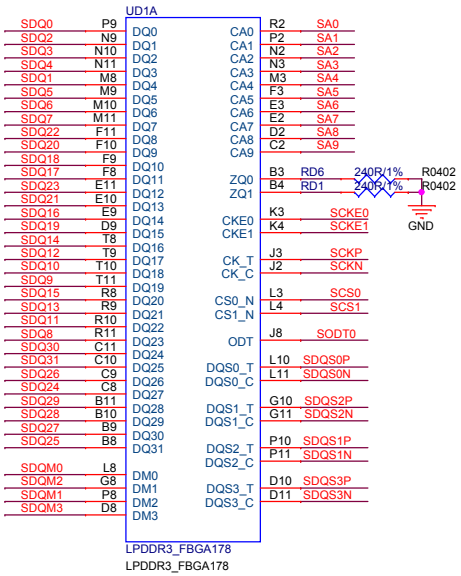

LPDDR3_FBGA178

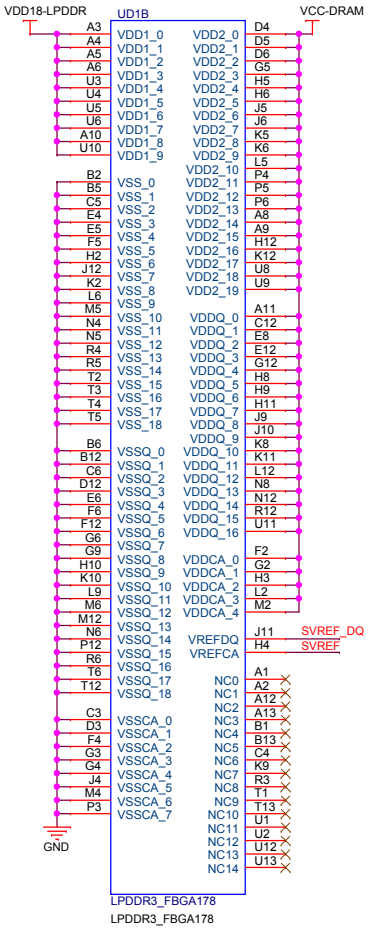

LPDDR3_FBGA178

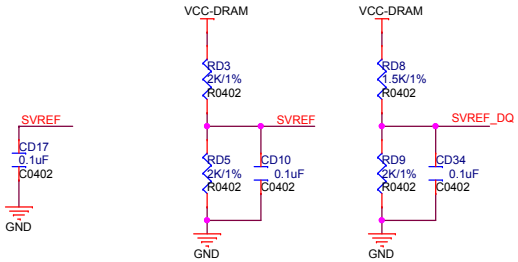

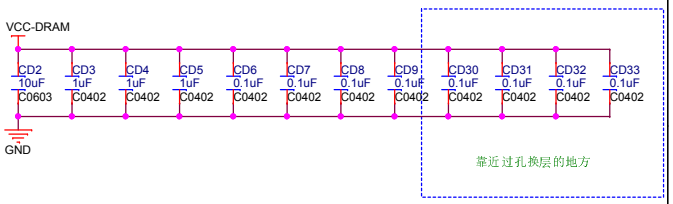

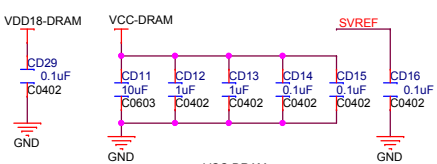

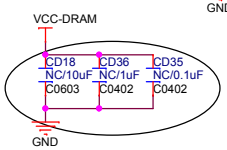

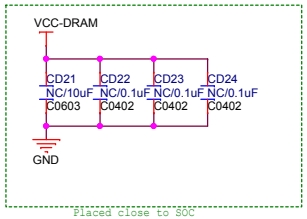

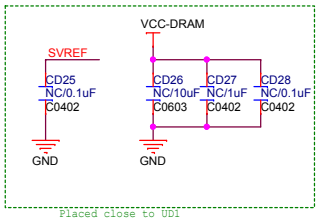

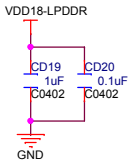

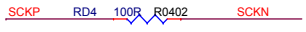

AllWinner Technology Co.,Ltd		
Design Name: H6-PROTO		
Size: A3	Page Name: DDR3 16X2	Rev: <RevCode>
Date: Friday, November 24, 2017	Sheet 13 of 14	

DCIN

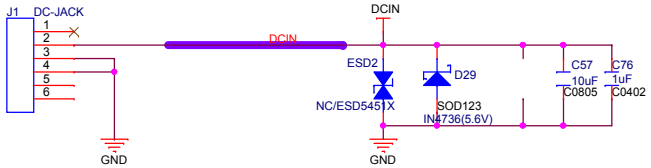

PMIC

AXP805

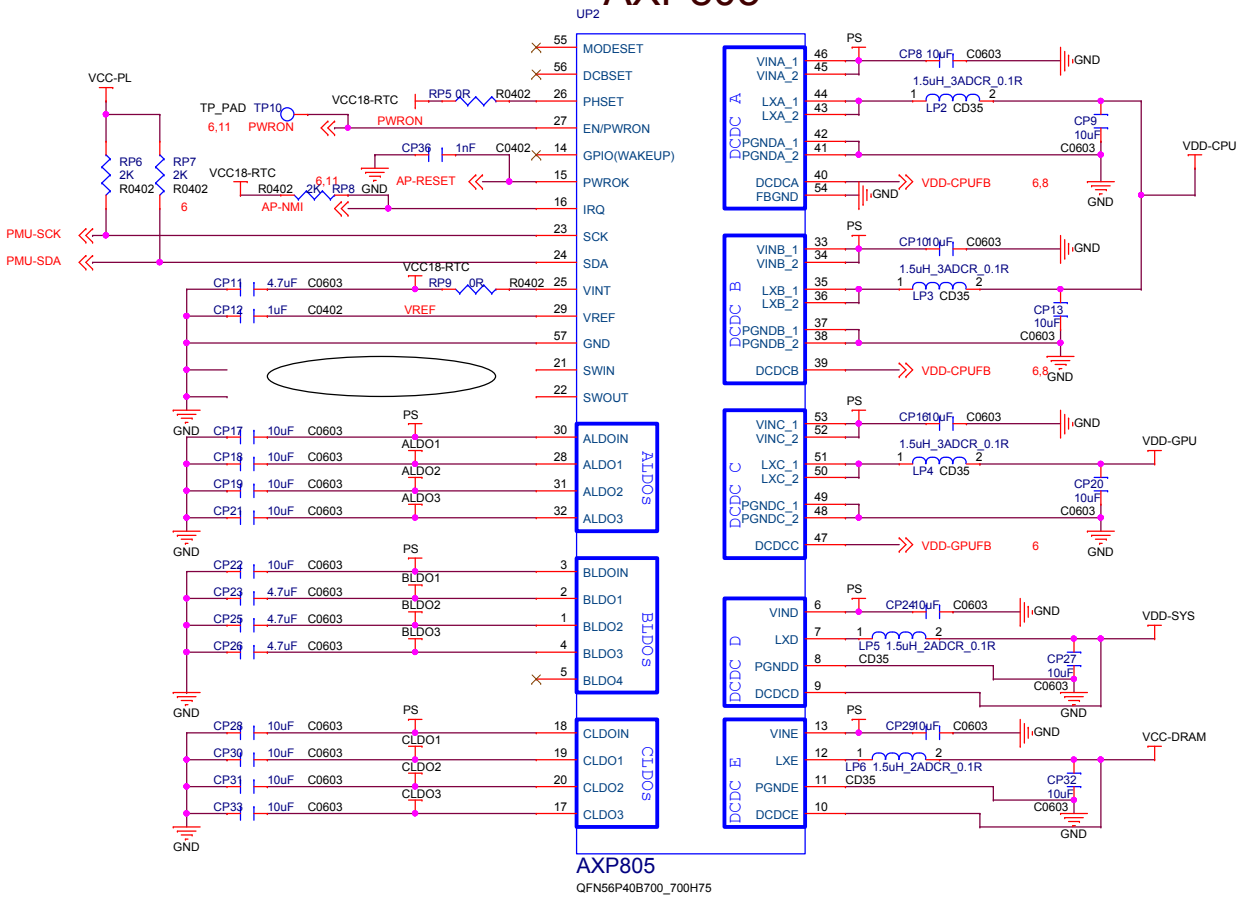

AXP805
QFN56P40B700_700H75

VDD-CPU
VDD-GPU
VDD-SYS
VCC-DRAM
ALDO3
VCC25-DRAM
ALDO3 can be used for DDR4(2V5)
VCC-5V
PS
USB-5V
VCC18-RTC
R0603 0R RP14
VDD18-LPDDR
VDD-SYS
VDD09-USB
VDD09-HDMI
VDD09-PCIE
VCC-DRAM
CLDO1
VCC-IO
VCC33-EMMC
VCC33-NAND
VCC33-CARD
VCC-PD
VCC-PC
R0402 NC/0R RP12
VCC33-USB
VCC-UART
BLDO1
VDD18-DRAM
VDD18-BIAS
VCC18-PLL
ALDO1
VCC-PL
VCC33-LED
VCC33-IR
BLDO2
VCC18-PCIE
VCC-PC
R0402 0R RP10
VDD18-EFUSE
VCC18-HDMI
ALDO2
AC-LDOIN
VCC33-AUDIO
VCC33-TV
VCC33-EPHY
VCC3V3-MAC
BLDO3
VCC-DCXOIO

	AllWinner Technology Co.,Ltd	
	Design Name: H6-PROTO	
Size: A3	Page Name: POWER	Rev: <RevCode>
Date: Friday, November 24, 2017	Sheet 8 of 14	

eMMC

NAND

	AllWinner Technology Co.,Ltd	
	Design Name: H6-PROTO	
Size: A3	Page Name: NAND-eMMC	Rev: <RevCode>
Date: Friday, November 24, 2017	Sheet 9 of 14	

5 4 3 2 1

SPDIF

CARD

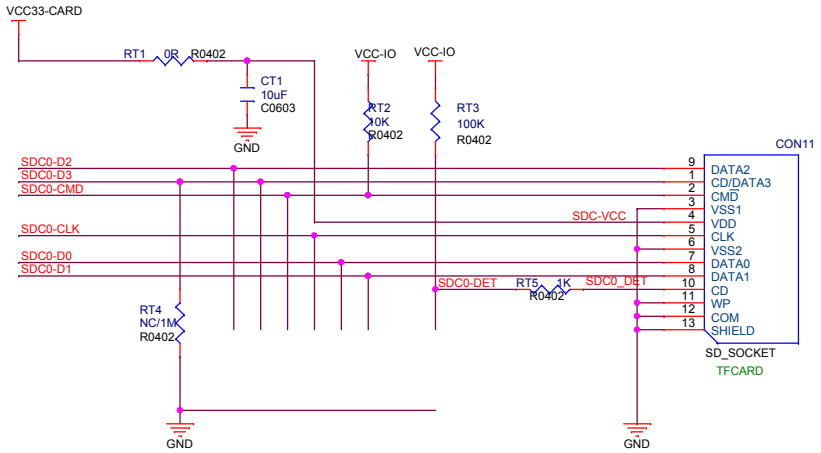

5 SDC0-D1
5 SDC0-D0
5 SDC0-CLK
5 SDC0-CMD
5 SDC0-D3
5 SDC0-D2
5 SDC0-DET

6 USB0-DRVVBUS

10 USB0-DM
10 USB0-DP
10 USB0-IDDET

10 USB1-DM
10 USB1-DP
10 USB1-SSTXN
10 USB1-SSTXP
10 USB1-SSRXN
10 USB1-SSRXP

10 USB3-DM
10 USB3-DP

USB

Differential pairs
Z0= 90 ohm

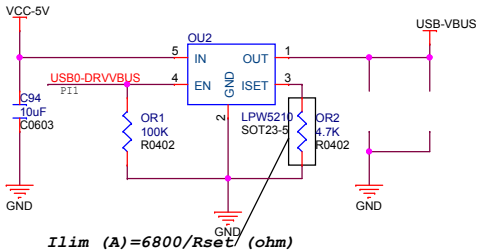

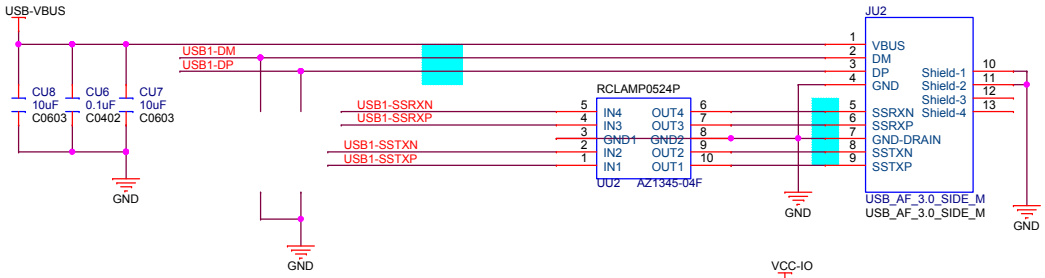

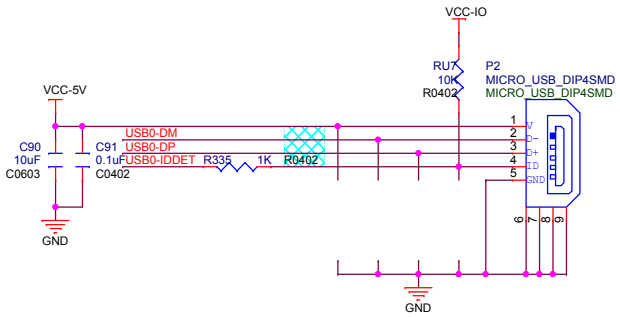

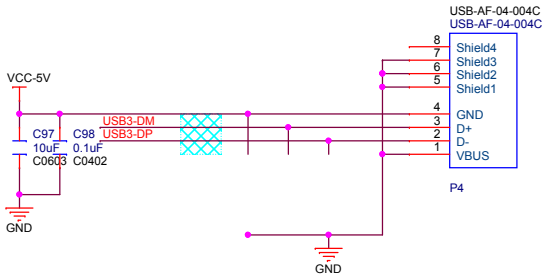

	AllWinner Technology Co.,Ltd	
	Design Name: H6-PROTO	
Size: A3	Page Name: CARD-USB-IR-SPDIF	Rev: <RevCode>
Date: Friday, November 24, 2017	Sheet 10 of 14	

5 4 3 2 1

Differential pairs
Z0= 100 ohm

EPHY-FE

VCC33-EPHY
VCC-EPHY-LED
VCC33-EPHY

5 CPUX-UTX
5 CPUX-URX
5 PWR-LED
5 STATUS-LED

DEBUG

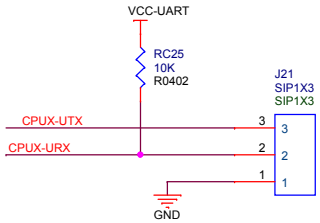

LED

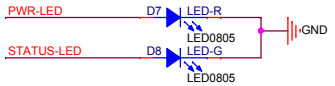

6,8 AP-RESET
6 UBOOT
5 RECOVERY

IR

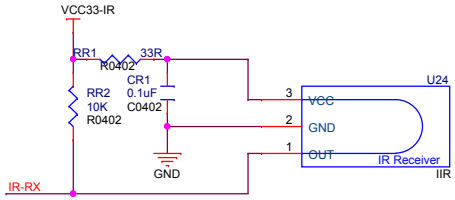

5 IR-RX

5 MBIAS
5 MIC1P
5 MIC1N

MIC

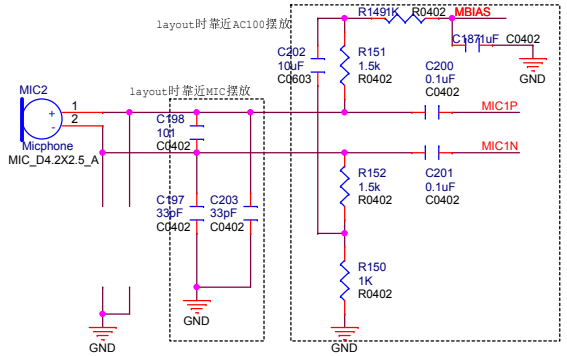

KEY

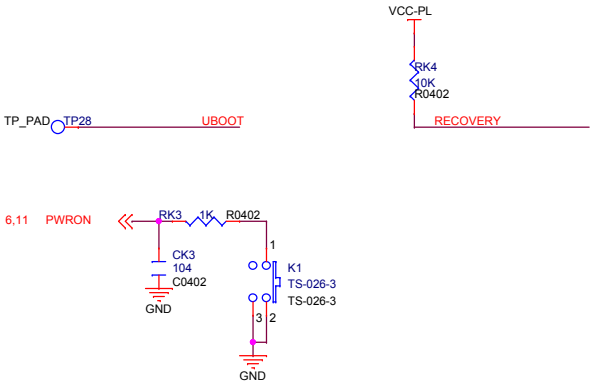

MASK1 MASK2 MASK3 MASK4
SMD SMD SMD SMD

AllWinner Technology Co.,Ltd		
Design Name: H6-PROTO		
Size: A3	Page Name: KEY-LED-ETH-DEBUG	Rev: <RevCode>
Date: Friday, November 24, 2017	Sheet 11 of 14	

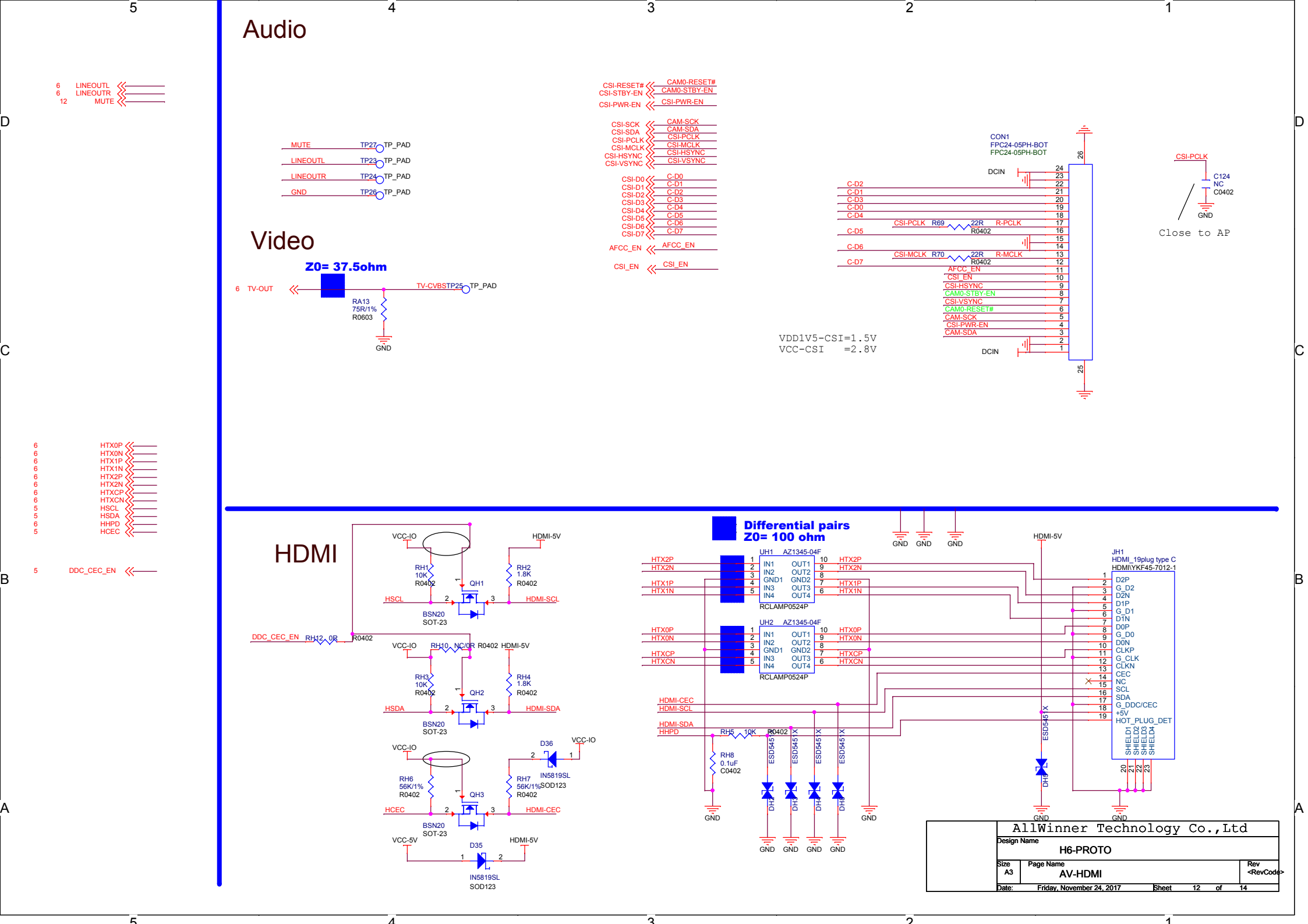

Audio
Video
Z0= 37.5ohm
HDMI
Differential pairs
Z0= 100 ohm
Close to AP
VDD1V5-CSI=1.5V
VCC-CSI =2.8V
CON1
FPC24-05PH-BOT
FPC24-05PH-BOT
UH1 AZ1345-04F
UH2 AZ1345-04F
RCLAMP0524P
JH1
HDMI_19plug type C
HDMI\YKF45-7012-1
AllWinner Technology Co.,Ltd
Design Name
H6-PROTO
Size
A3
Page Name
AV-HDMI
Rev
<RevCode>
Date: Friday, November 24, 2017
Sheet 12 of 14

WIFI+BT

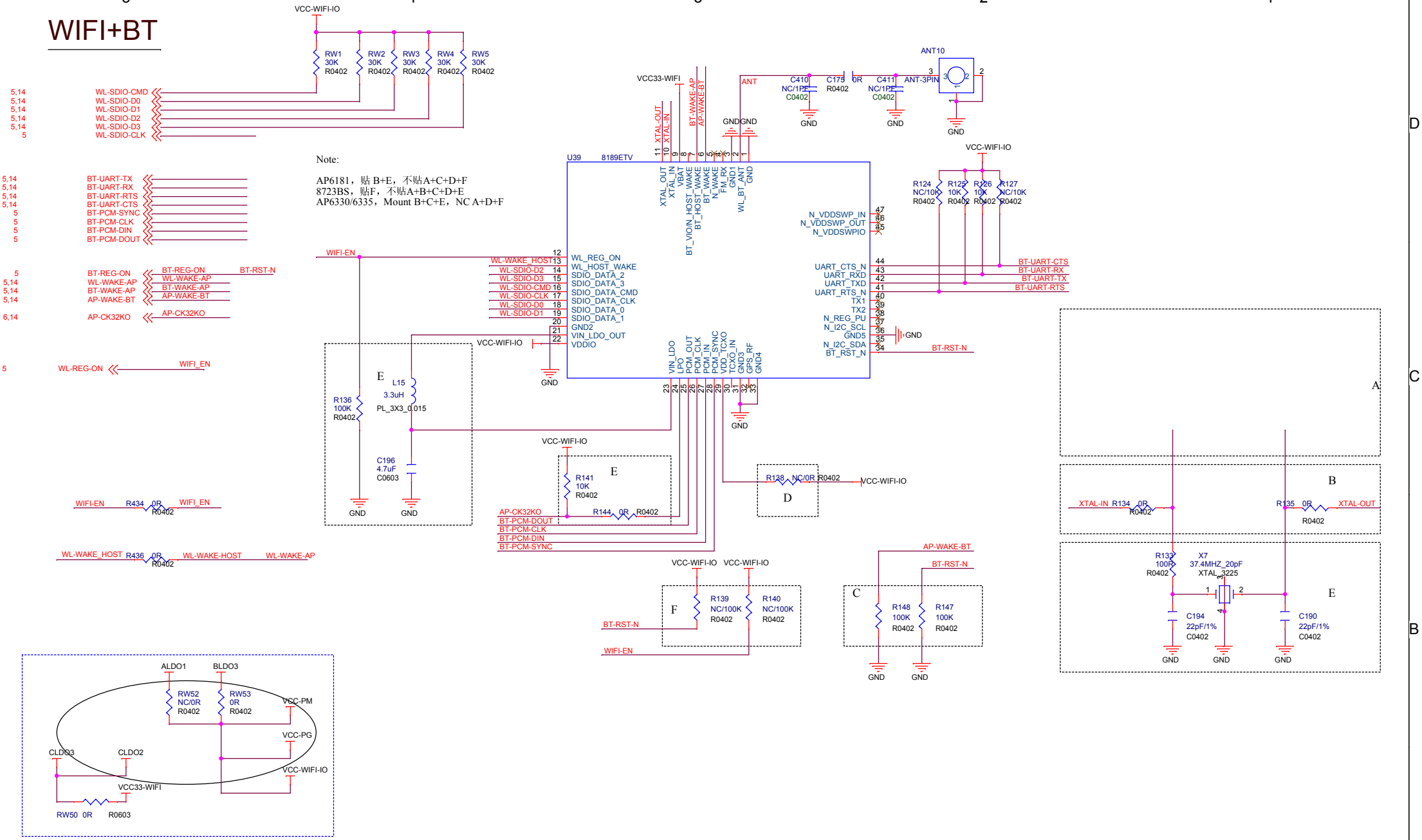

RW51 RW45 RW46 RW50 RW52 RW53

不带蓝牙遥控	IO为1.8V	NC	NC	NC	0R	NC	0R
	IO为3.3V	NC	NC	NC	0R	0R	NC
带蓝牙遥控	IO为1.8V	0R	NC	NC	NC	NC	NC
	IO为3.3V	0R	0R	0R	NC	NC	NC

	AllWinner Technology Co.,Ltd	
	Design Name: H6-PROTO	
Size: A3	Page Name: WIFI-BT 2T2R	Rev: <RevCode>
Date: Friday, November 24, 2017	Sheet 13 of 14	

Ext Port

Ext

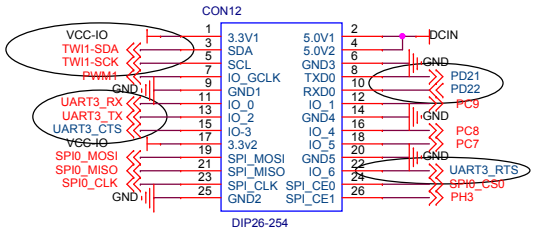

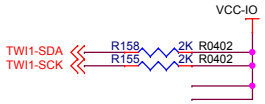

Xunlong Software		
Design Name: ORANGE_PI-One		
Size: A3	Page Name: FE-DBG	Rev
Date: Friday, November 24, 2017	Sheet 15 of 16	