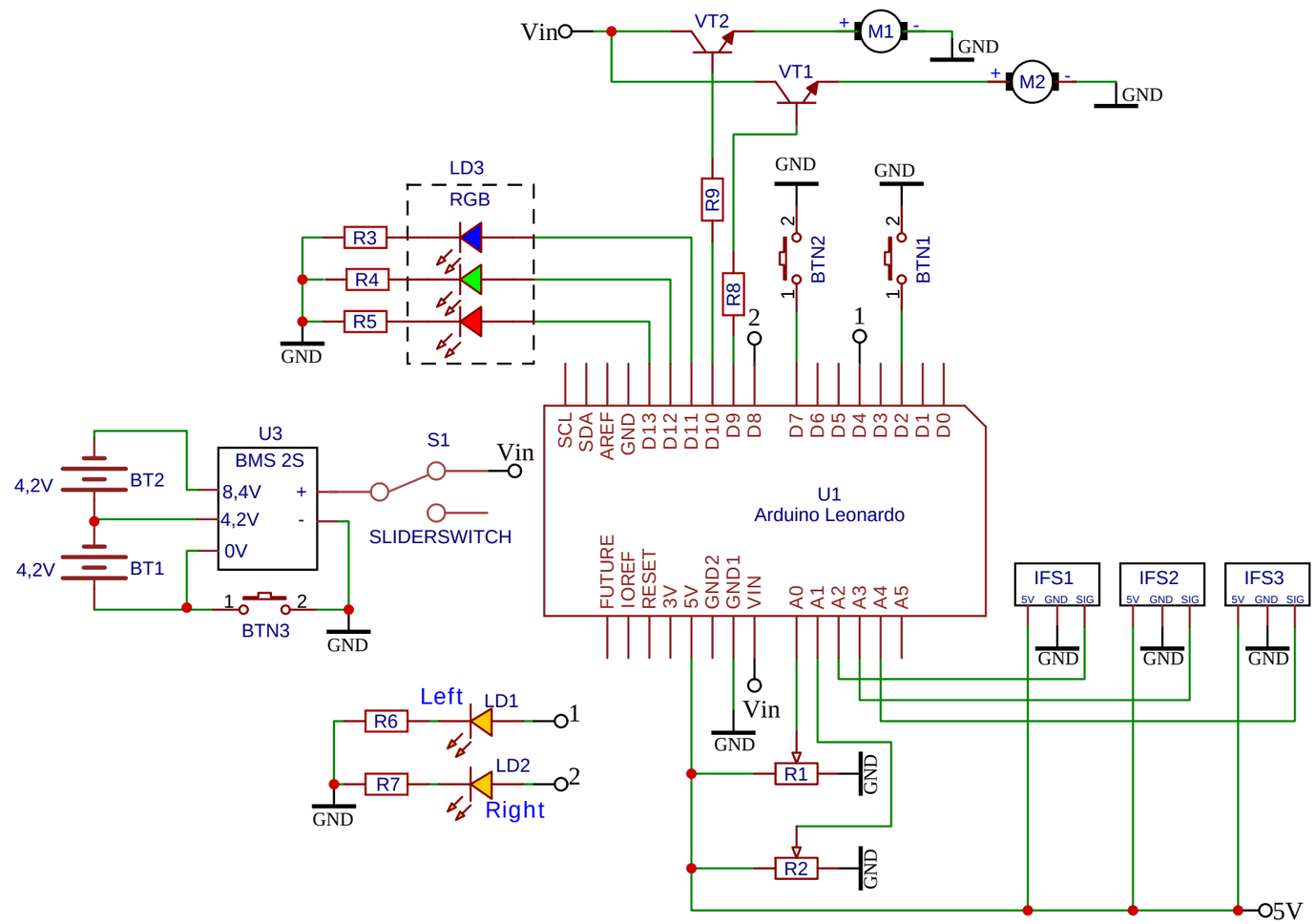

TITLE: Sheet_1		REV: 1.0
EasyEDA	Company: Your Company	Sheet: 1/1
	Date: 2022-04-26 Drawn By: 裀滗膵罢忿 竃帠 縻	