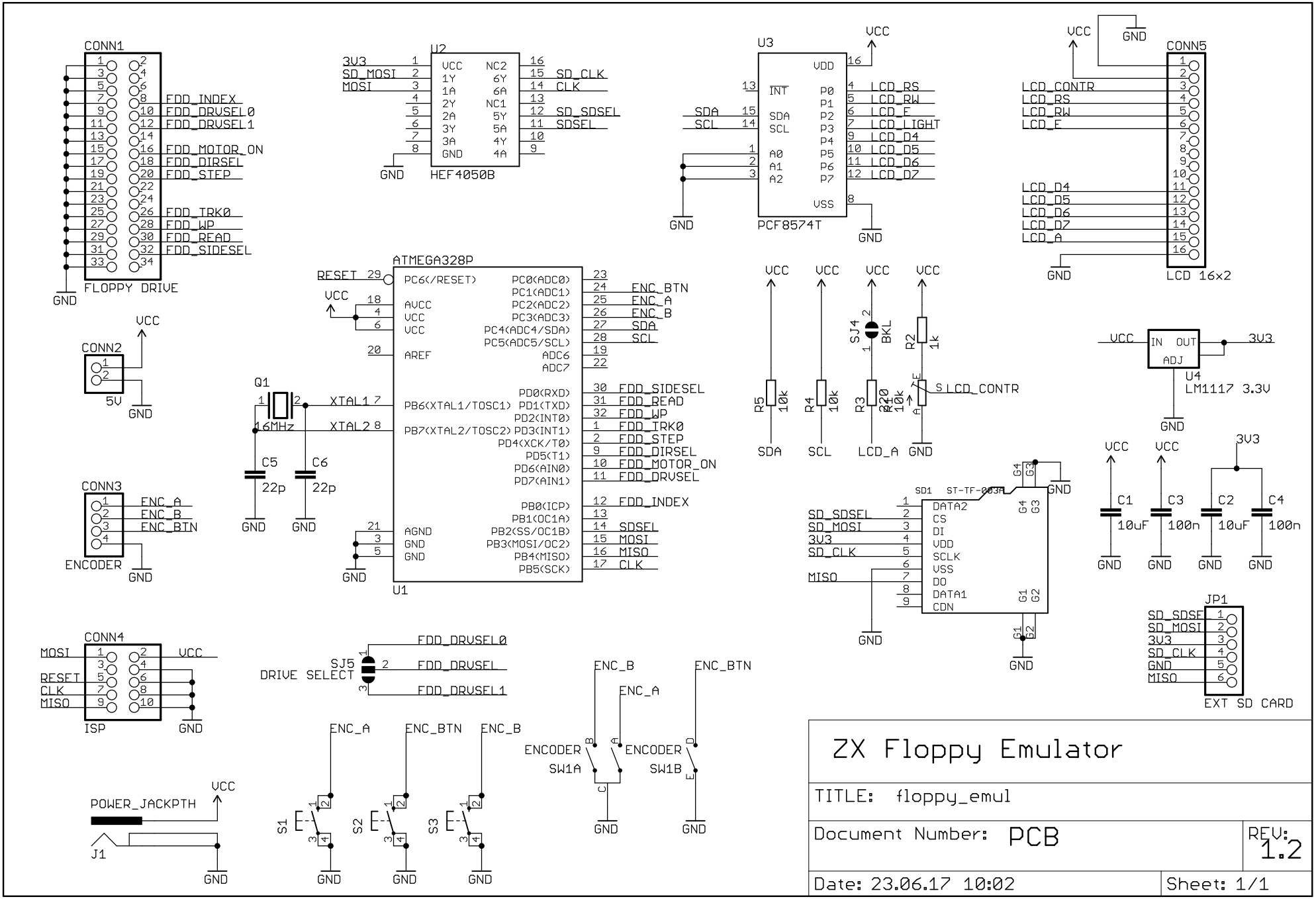

ZX Floppy Emulator

TITLE: floppy_emul

Document Number: PCB

REV: 1.2

Date: 23.06.17 10:02

Sheet: 1/1