DIG Bachelor Study
and CS-for-all

Problem Solving and Algorithmic Thinking

2UE

Lecturers: Sebastian Forster and Ana Sokolova
Department of Computer Sciences

PARIS
LODRON
UNIVERSITY
SALZBURG

Classes Schedule

- Classes Monday 12:45 pm - 2:15 pm (Group D) and
  Monday 4pm - 5:30pm (Group E) in SR1.33

- Tutors tba

- Blackboard communication, assignments, announcements, and grades
  PlusOnline communication (emails)

Classes Schedule

- Classes Monday 12:45 pm - 2:15 pm (Group D) and
  Monday 4pm - 5:30pm (Group E) in SR1.33

starting next week

- Tutors tba

- Blackboard communication, assignments, announcements, and grades
  PlusOnline communication (emails)

Classes and Grading

- Each week we will cover an important topic in algorithms, complexity, CS in general, by letting you solve simple example problems in class, in larger groups under our (the lecturers') supervision
- 4 assignments will be given and graded throughout the semester
- The assignments are to be solved in groups of 4 students; 2/3 of the grade determined by the points on the assignments
- One small test towards the end of the semester (quiz of simple exercises) will finally determine the remaining 1/3 grade
- Activity in class may increase your grade for one.

Presence

- Presence is obligatory
- You may miss up to 2 weeks of classes, for anything beyond that a serious justification is needed

Presence

in Corona-times,
we might need to go online

- Presence is obligatory
- You may miss up to 2 weeks of classes, for anything beyond that a serious justification is needed

Teaching and Studying in Corona Times

- Both challenges and opportunities
- Things may change on short notice
- Be adaptive
- Be considerate

We count on normal classes in presence!
All material and information will be given via Blackboard.

Plan B

In case of further
corona-related problems

Everyone participates online in Webex.

ECTS calculation

- 3 ECTS for the course (UE)

ECTS calculation

1 ECTS = 25 hours

- 3 ECTS for the course (UE)

ECTS calculation

1 ECTS = 25 hours

- 3 ECTS for the course (UE)

3 x 25 = 75 hours

ECTS calculation

1 ECTS = 25 hours

- 3 ECTS for the course (UE)

3 x 25 = 75 hours

in class app. 18 hours

ECTS calculation

1 ECTS = 25 hours

- 3 ECTS for the course (UE)

3 x 25 = 75 hours

in class app. 18 hours

remaining 57 hours

ECTS calculation

1 ECTS = 25 hours

- 3 ECTS for the course (UE)

3 x 25 = 75 hours

in class app. 18 hours

remaining 57 hours

app. 4-5 hours a week :-)

ECTS calculation

1 ECTS = 25 hours

- 3 ECTS for the course (UE)

3 x 25 = 75 hours

in class app. 18 hours

remaining 57 hours

or : 8 hours per assignment + 25 hours test preparation

app. 4-5 hours a week :-)

Goals:

Goals:

Goals:

Image source: Springer

Goals:

Goals:

Throughout the course,
you will learn to:

Goals:

Throughout the course, you will learn to:

- Think algorithmically with the help of suitably chosen examples
- Intuitively understand fundamental computation costs as well as the limits of computability
- Participate in goal-oriented team work

Goals:

Throughout the course, you will learn to:

and solve problems

- Think algorithmically with the help of suitably chosen examples
- Intuitively understand fundamental computation costs as well as the limits of computability
- Participate in goal-oriented team work

Topics and Schedule:

11.10. Representing Information

18.10. Rewriting

Ana Sokolova

8.11. Normal Algorithms

15.11. Sorting I

Sebastian Forster

22.11. Sorting II

29.11. Graph Algorithms I

Sebastian Forster

6.12. Graph Algorithms II

13.12. Finite Automata

20.12. Test

Ana Sokolova

10.1. Turing Machines

17.1. Backtracking

Sebastian Forster

24.1. Reductions / Computability

Ana Sokolova

Topics and Schedule:

11.10. Representing Information

18.10. Rewriting

8.11. Normal Algorithms

Ana Sokolova

Assignment 1

15.11. Sorting I

22.11. Sorting II

Assignment 2

Sebastian Forster

29.11. Graph Algorithms I

6.12. Graph Algorithms II

Assignment 3

Sebastian Forster

13.12. Finite Automata

20.12. Test

10.1. Turing Machines

Assignment 4

Ana Sokolova

17.1. Backtracking

Sebastian Forster

24.1. Reductions / Computability

Ana Sokolova

Let's start with a puzzle…

The river-crossing puzzle

[Hopcroft et al, Kastens et al]

The river-crossing puzzle

- A man stands with a wolf, a goat, and a cabbage at the left bank of a river, that he wants to cross.
- The man has a boat that is large enough to carry him and another object to the other side.
- If the man leaves the wolf and the goat, or the goat and the cabbage on one side without supervision, one of them will get eaten :-(
- Is it possible to cross the river so that neither the goat nor the cabbage is eaten?

[Hopcroft et al, Kastens et al]

The river-crossing puzzle

- A man stands with a wolf, a goat, and a cabbage at the left bank of a river, that he wants to cross.
- The man has a boat that is large enough to carry him and another object to the other side.
- If the man leaves the wolf and the goat, or the goat and the cabbage on one side without supervision, one of them will get eaten :-(
- Is it possible to cross the river so that neither the goat nor the cabbage is eaten?

The river-crossing puzzle

- A man stands with a wolf, a goat, and a cabbage at the left bank of a river, that he wants to cross.
- The man has a boat that is large enough to carry him and another object to the other side.
- If the man leaves the wolf and the goat, or the goat and the cabbage on one side without supervision, one of them will get eaten :-(
- Is it possible to cross the river so that neither the goat nor the cabbage is eaten?

The river-crossing puzzle

- A man stands with a wolf, a goat, and a cabbage at the left bank of a river, that he wants to cross.
- The man has a boat that is large enough to carry him and another object to the other side.
- If the man leaves the wolf and the goat, or the goat and the cabbage on one side without supervision, one of them will get eaten :-(
- Is it possible to cross the river so that neither the goat nor the cabbage is eaten?

The river-crossing puzzle

Formalization with a finite automaton [Kastens et al.] :

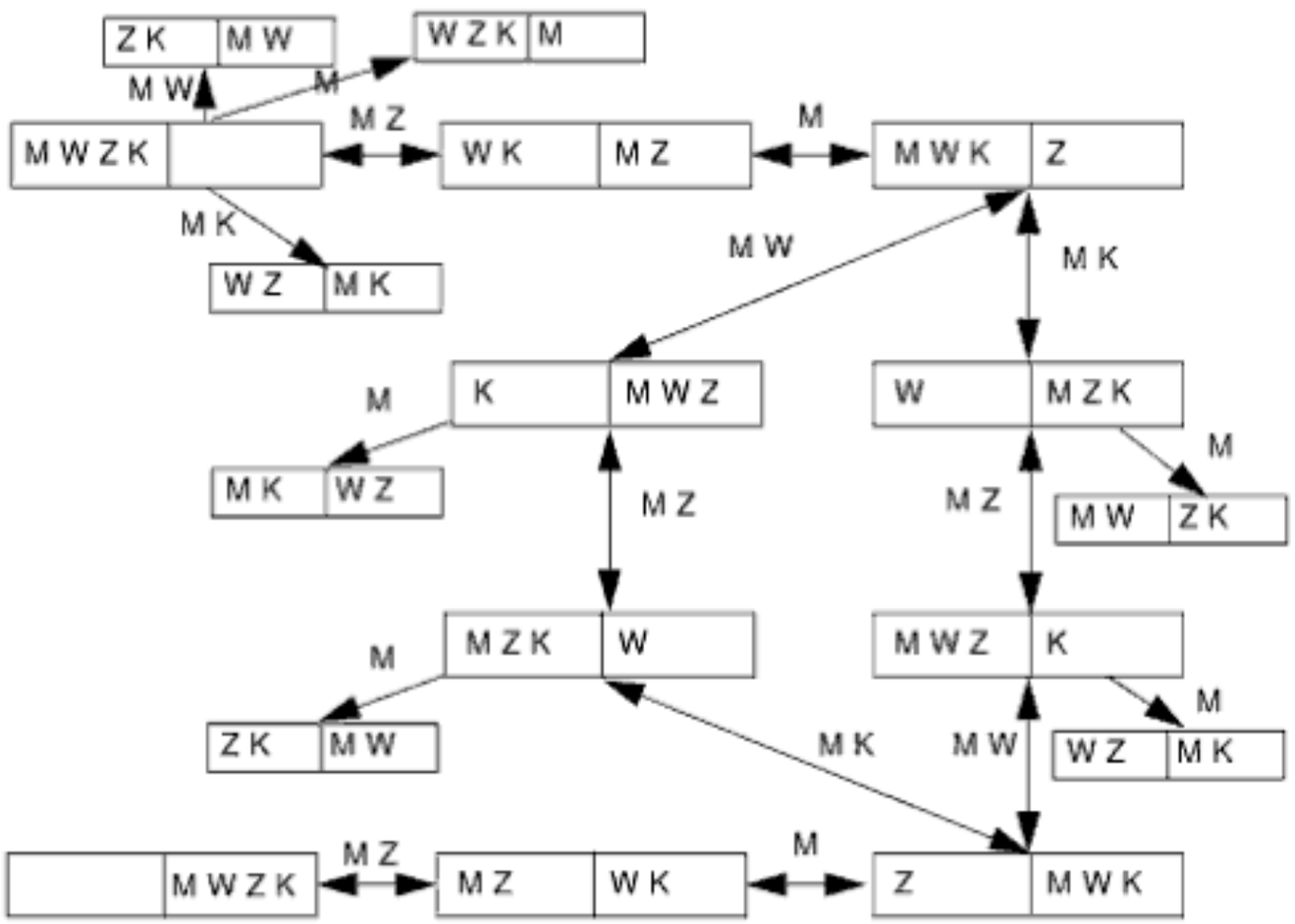

states and transitions

The river-crossing puzzle

Formalization with a finite automaton [Kastens et al.] :

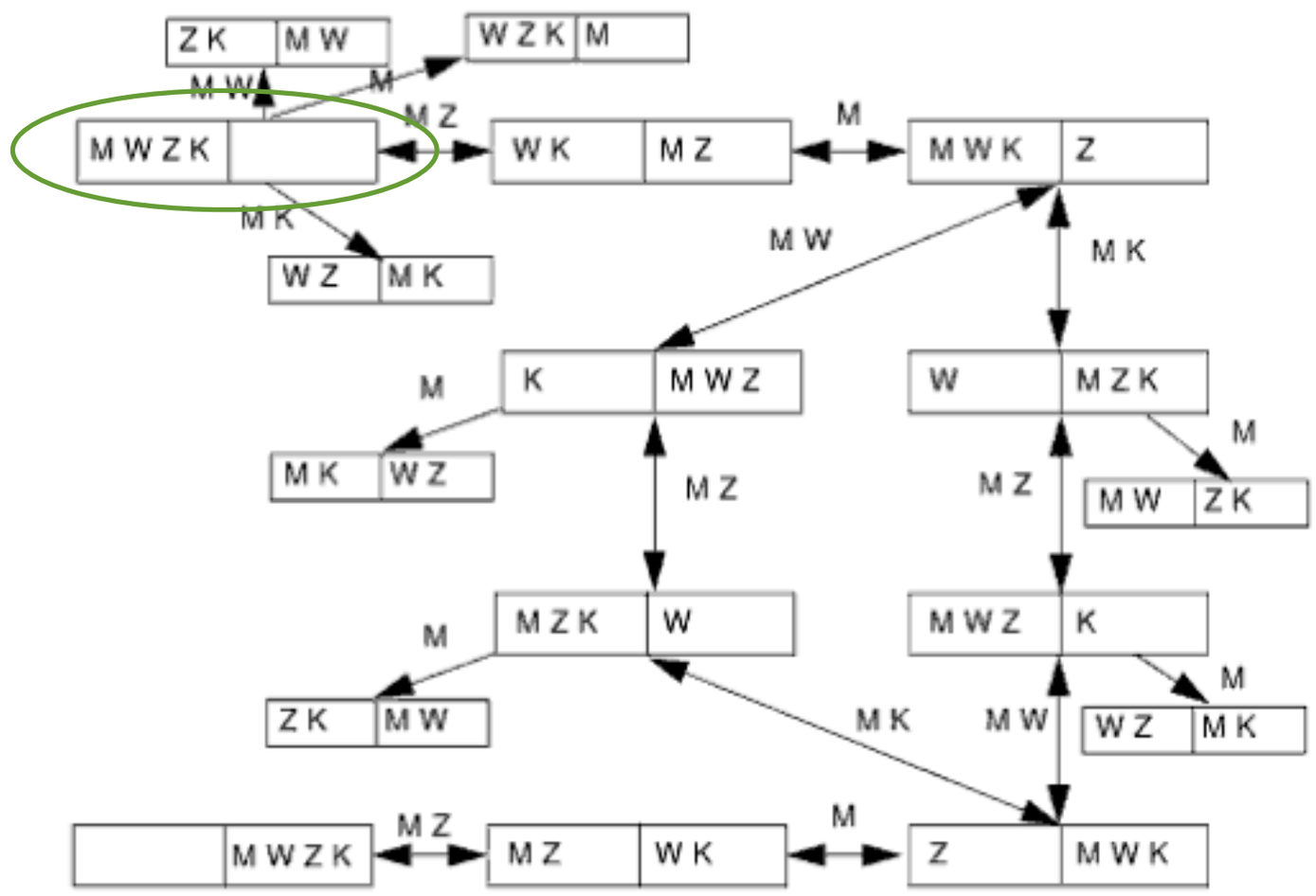

states and transitions

The river-crossing puzzle

Formalization with a finite automaton [Kastens et al.] :

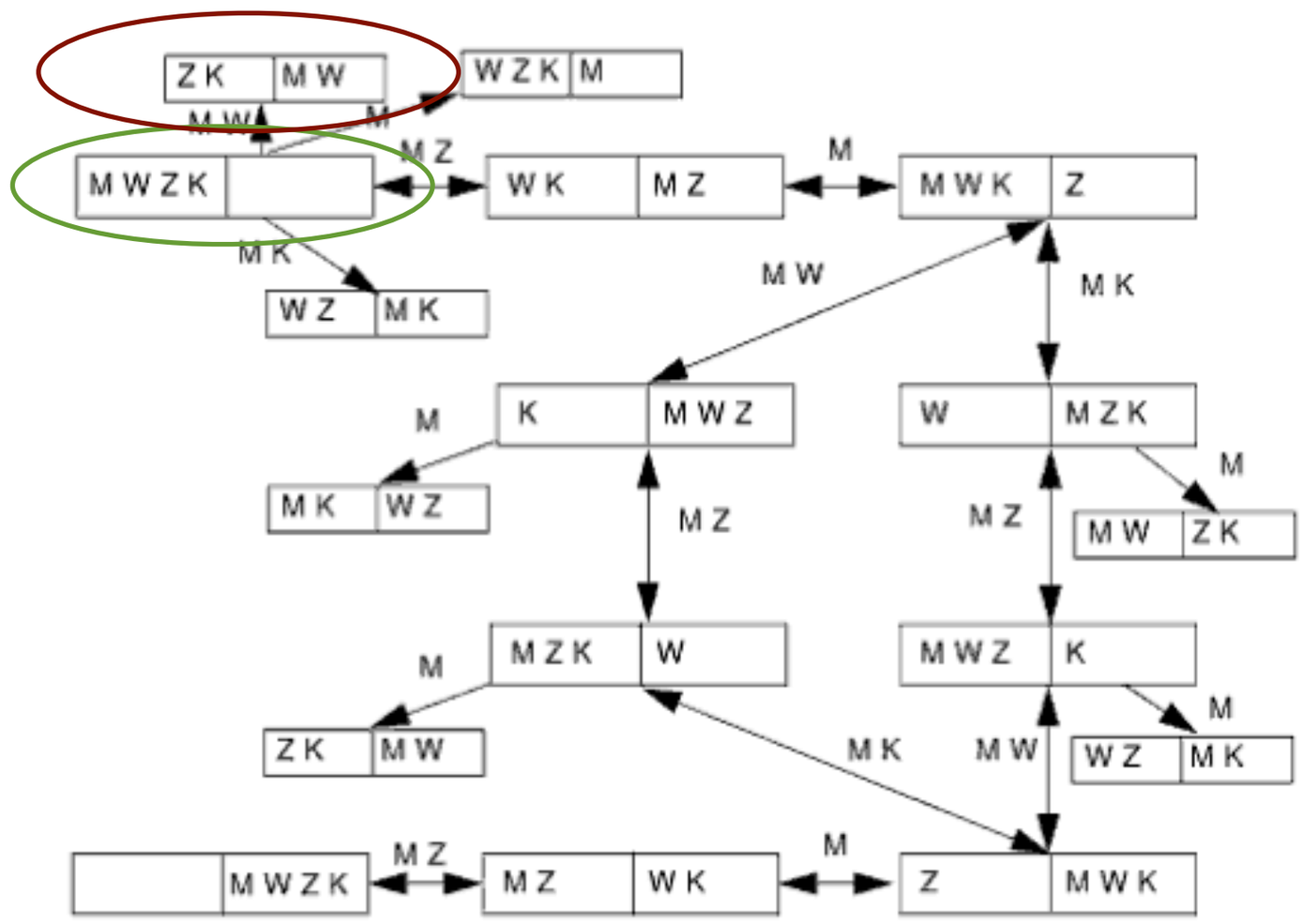

states and transitions

The river-crossing puzzle

Formalization with a finite automaton [Kastens et al.] :

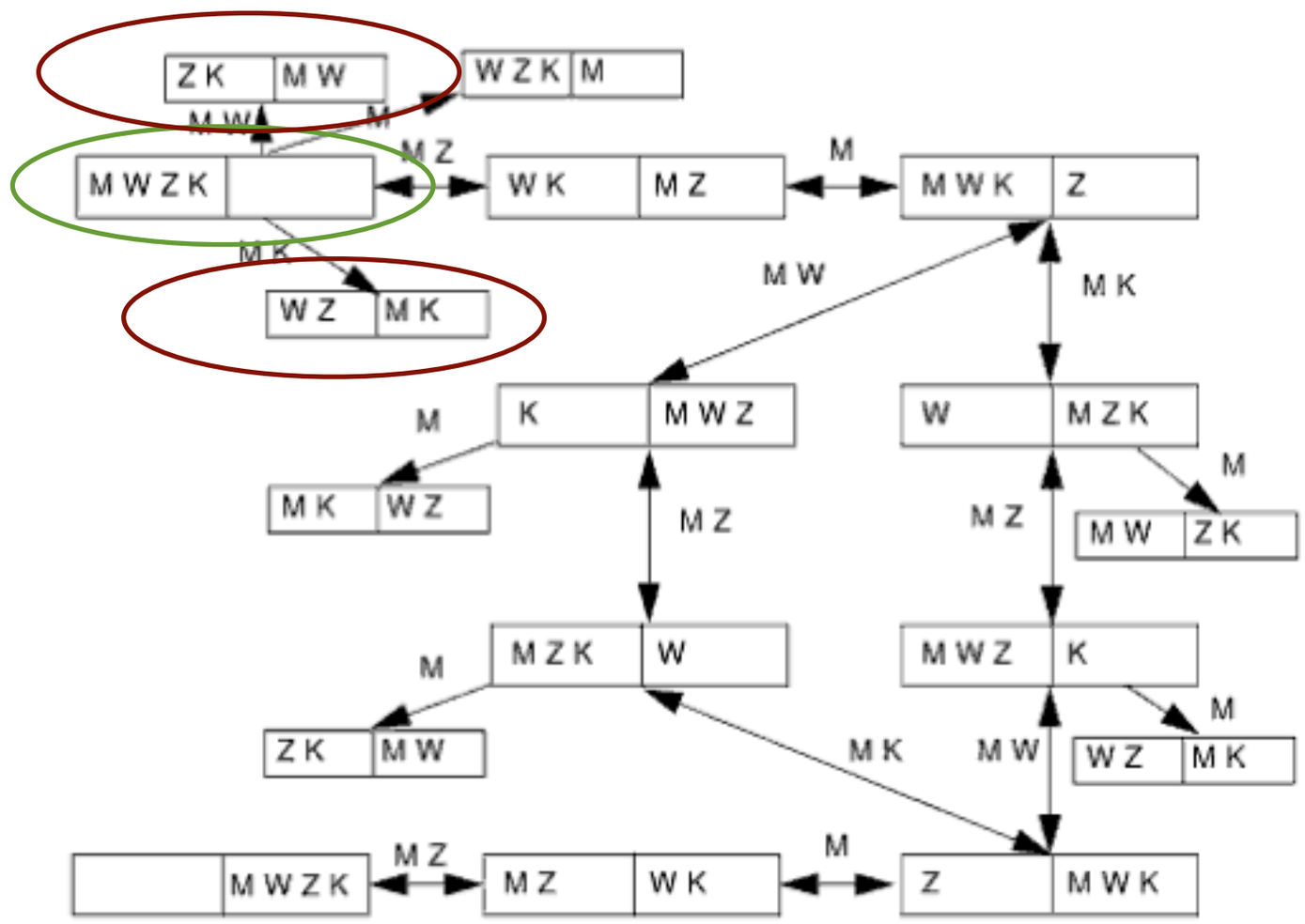

states and transitions

The river-crossing puzzle

Formalization with a finite automaton [Kastens et al.] :

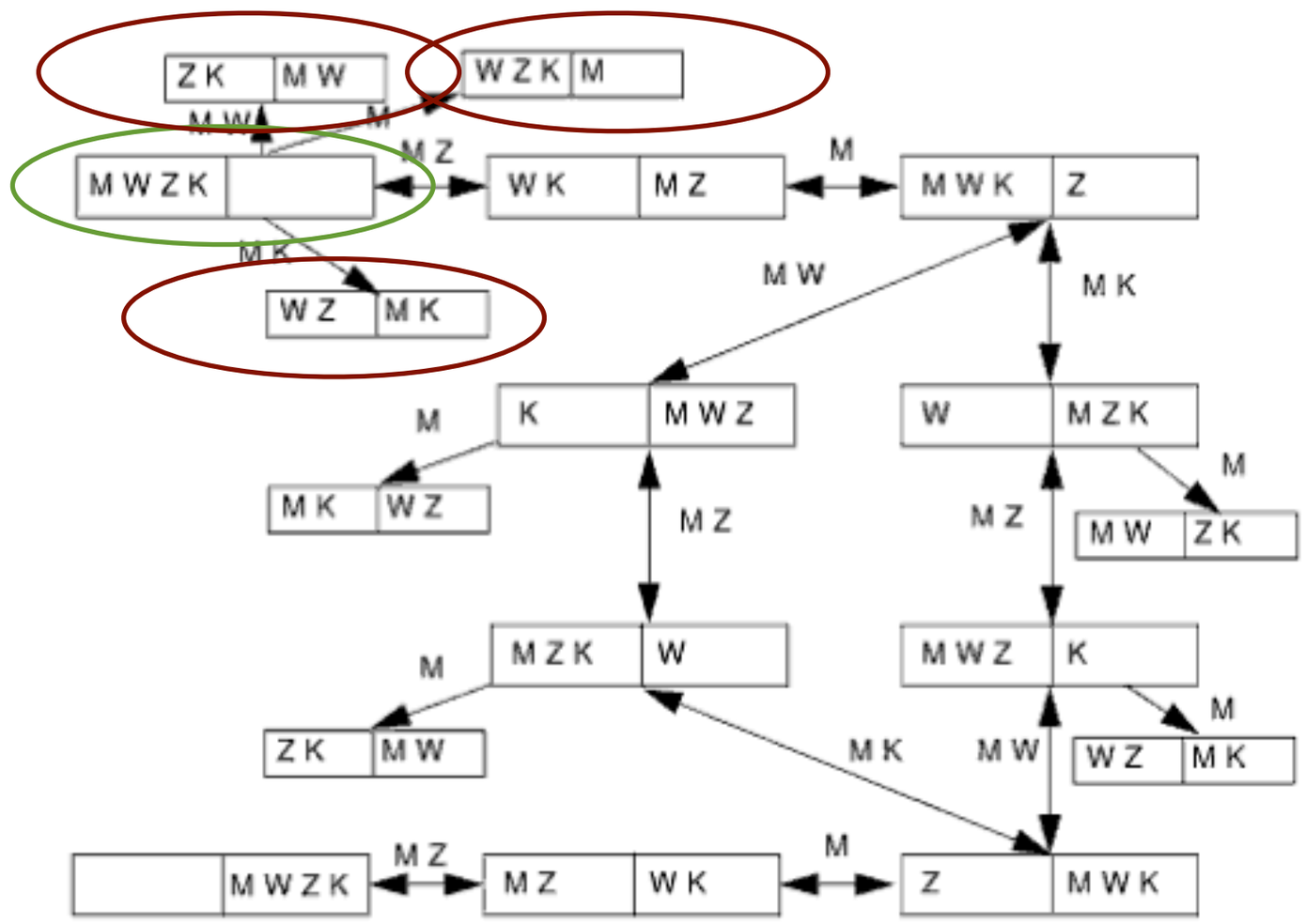

states and transitions

The river-crossing puzzle

Formalization with a finite automaton [Kastens et al.] :

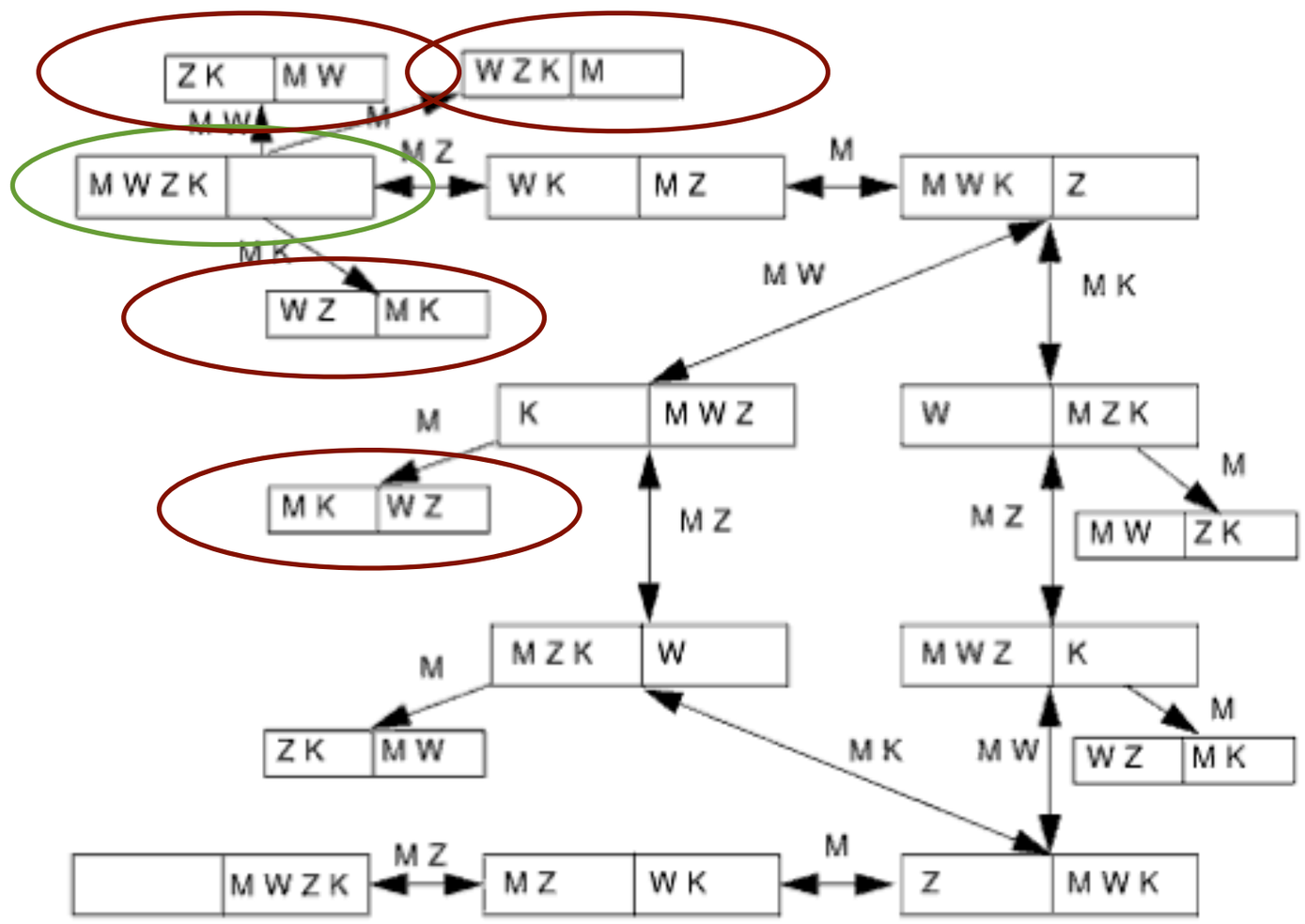

states and transitions

The river-crossing puzzle

Formalization with a finite automaton [Kastens et al.] :

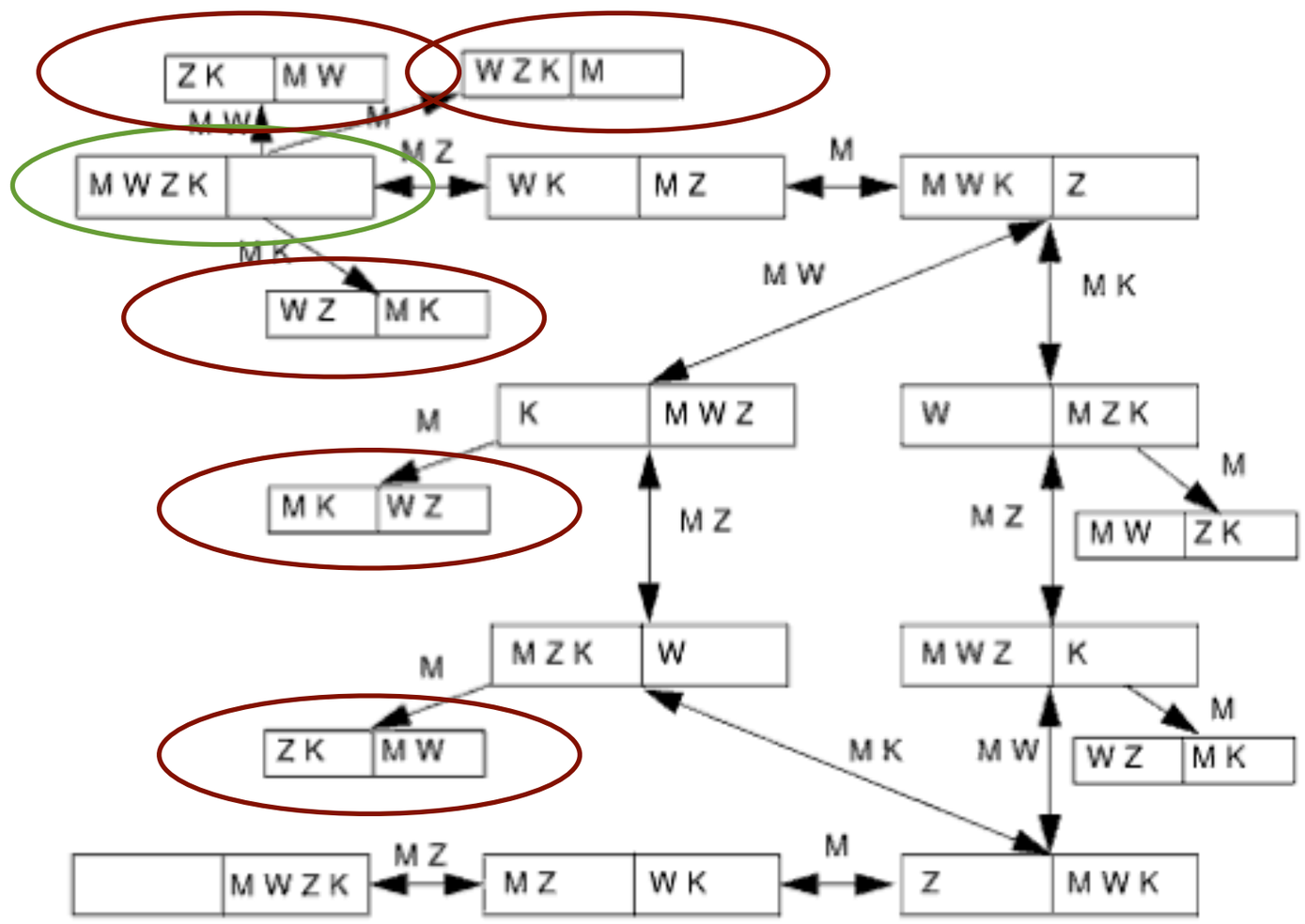

states and transitions

The river-crossing puzzle

Formalization with a finite automaton [Kastens et al.] :

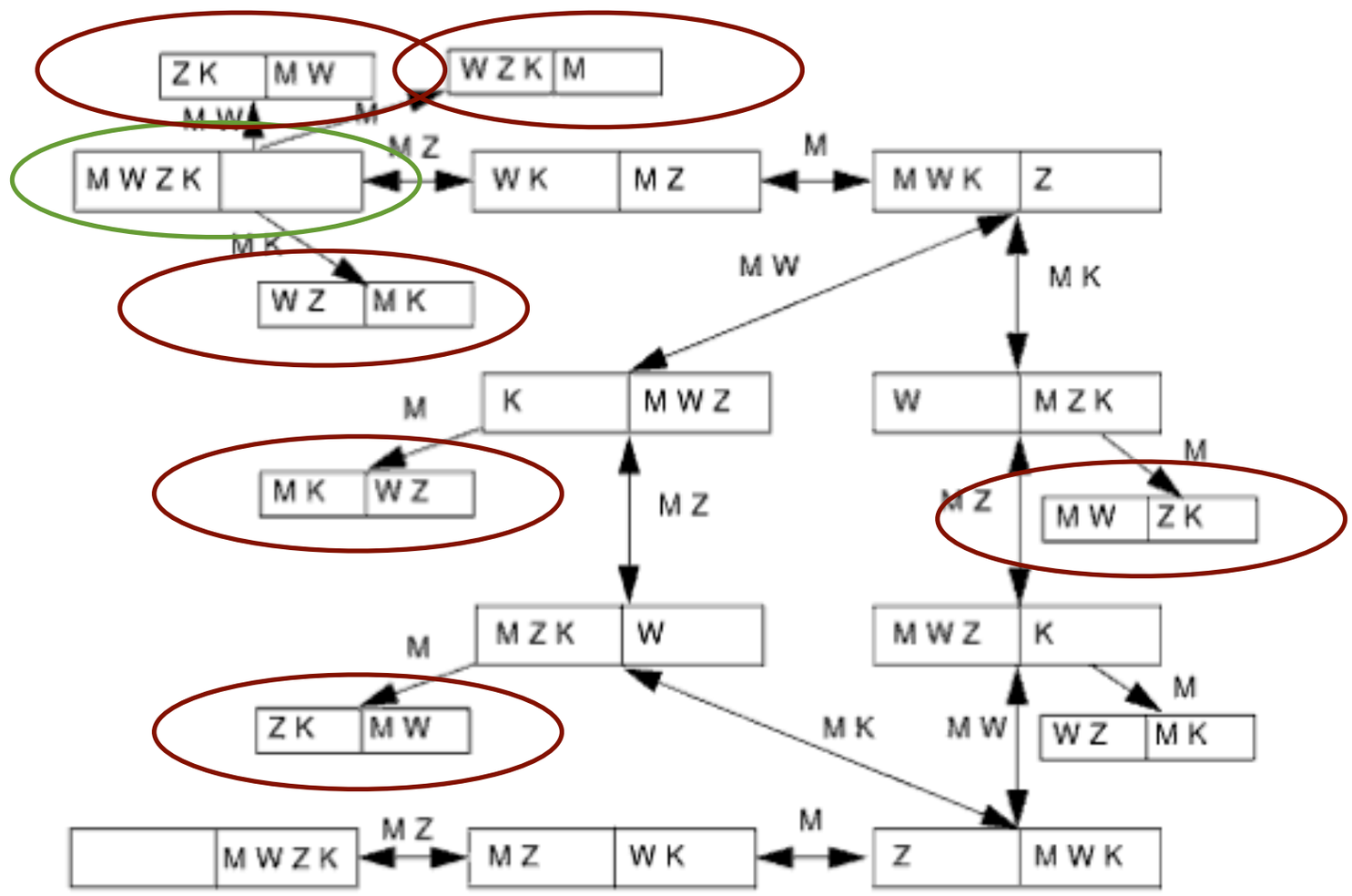

states and transitions

The river-crossing puzzle

Formalization with a finite automaton [Kastens et al.] :

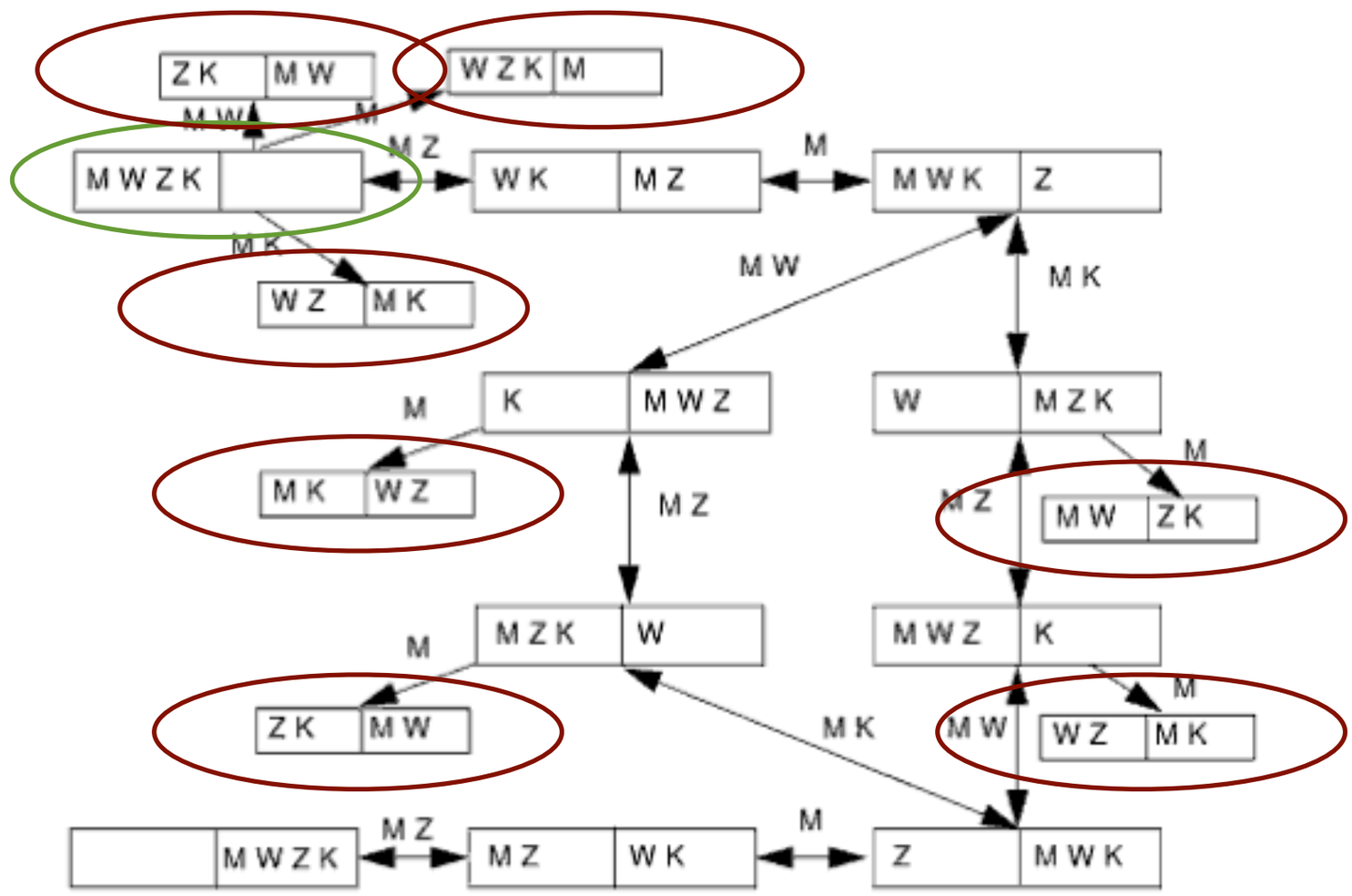

states and transitions

The river-crossing puzzle

Formalization with a finite automaton [Kastens et al.] :

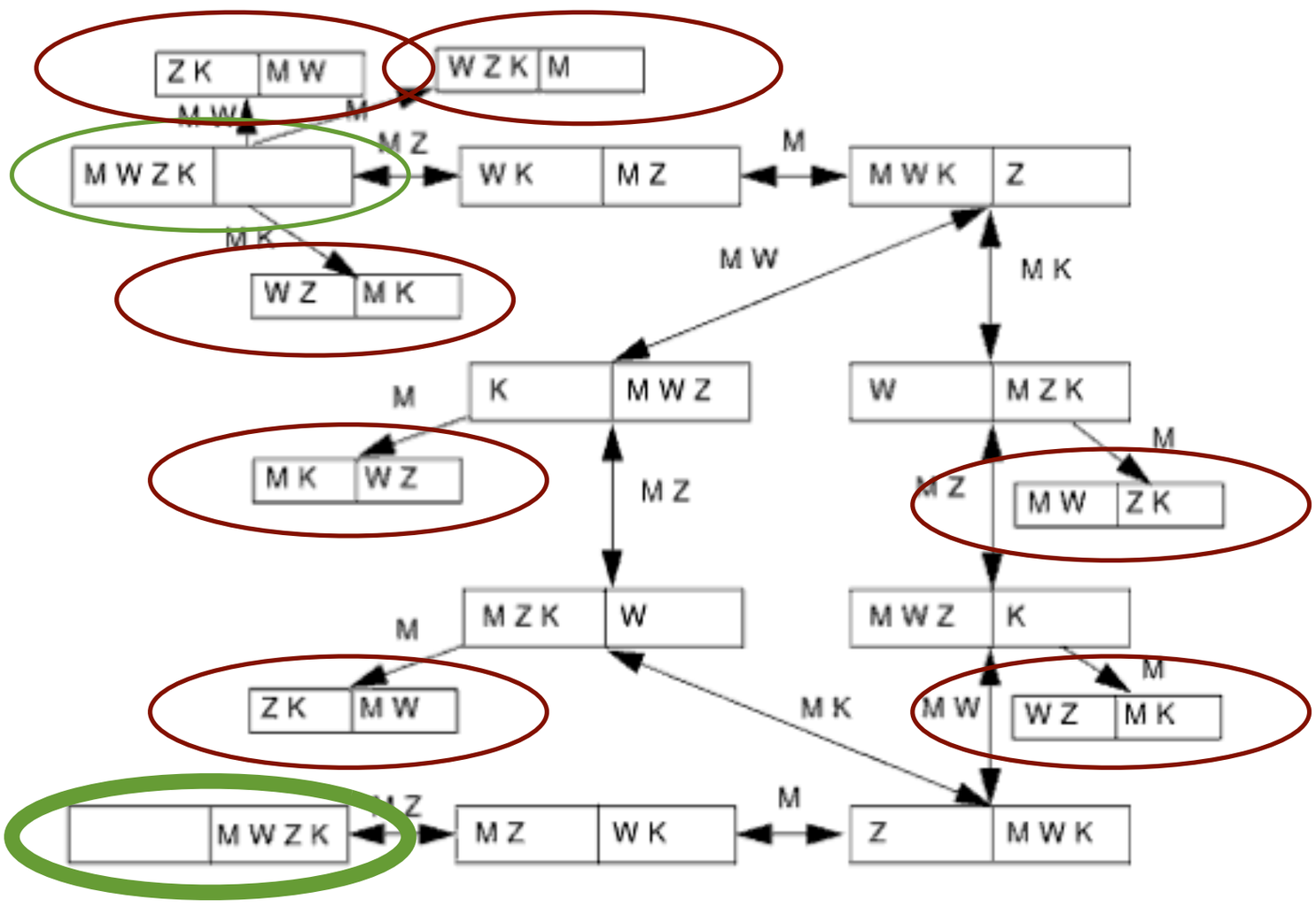

states and transitions