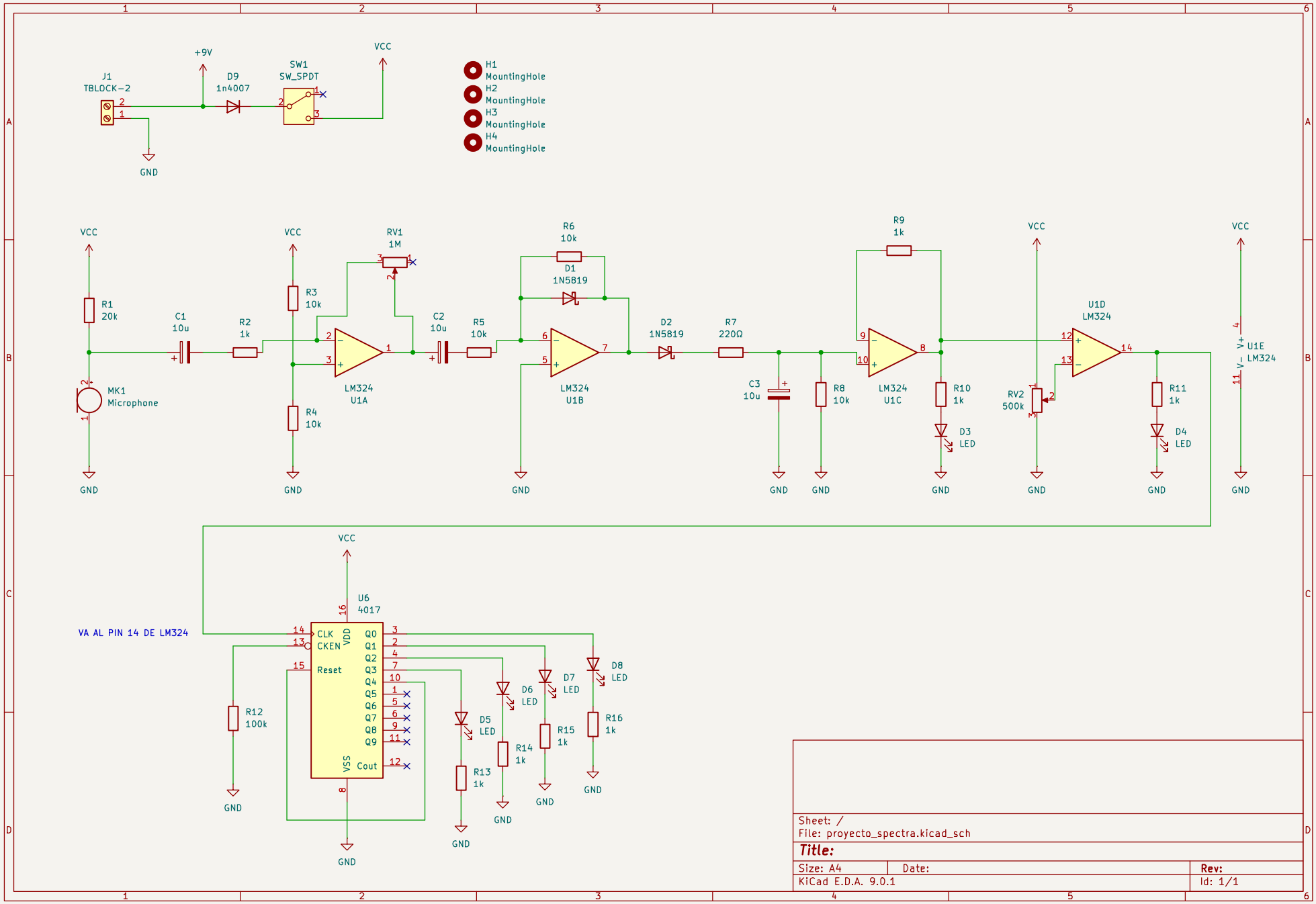
J1
TBLOCK-2
+9V
D9
1n4007
SW1
SW_SPDT
VCC
GND
H1
MountingHole
H2
MountingHole
H3
MountingHole
H4
MountingHole
R1
20k
C1
10u
R2
1k
MK1
Microphone
R3
10k
R4
10k
RV1
1M
LM324
U1A
C2
10u
R5
10k
R6
10k
D1
1N5819
LM324
U1B
D2
1N5819
R7
220Ω
C3
10u
R8
10k
R9
1k
LM324
U1C
R10
1k
D3
LED
U1D
LM324
RV2
500k
R11
1k
D4
LED
U1E
LM324
VA AL PIN 14 DE LM324
U6
4017
CLK
CKEN
Reset
VDD
VSS
Cout
Q0
Q1
Q2
Q3
Q4
Q5
Q6
Q7
Q8
Q9
R12
100k
D5
LED
R13
1k
D6
LED
R14
1k
D7
LED
R15
1k
D8
LED
R16
1k
Sheet: /
File: proyecto_spectra.kicad_sch
Title:
Size: A4
Date:
Rev:
KiCad E.D.A. 9.0.1
Id: 1/1