A GMRF introduction: structured random effects

Elias T. Krainski

March 2026

Motivating examples

Infant mortality over time

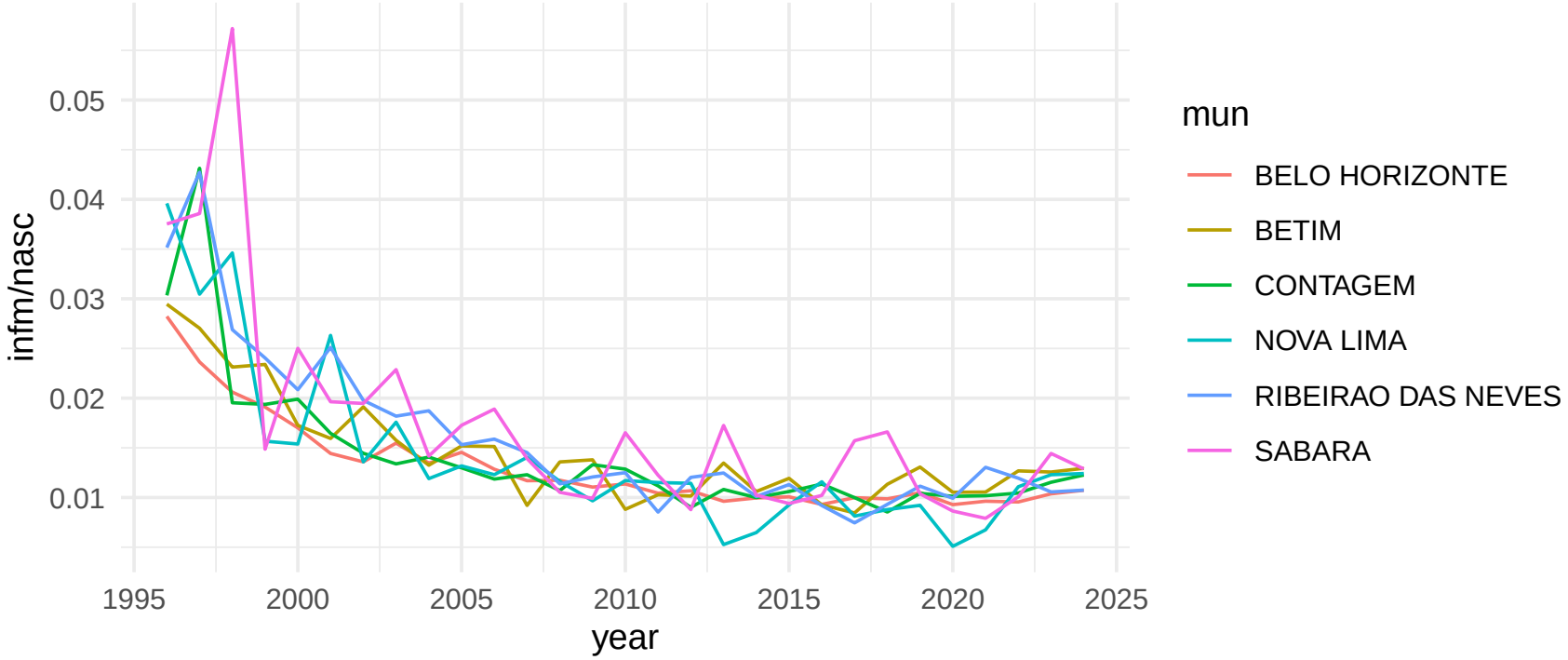

Problem: model the rate over time for each municipality

Effect of a covariate

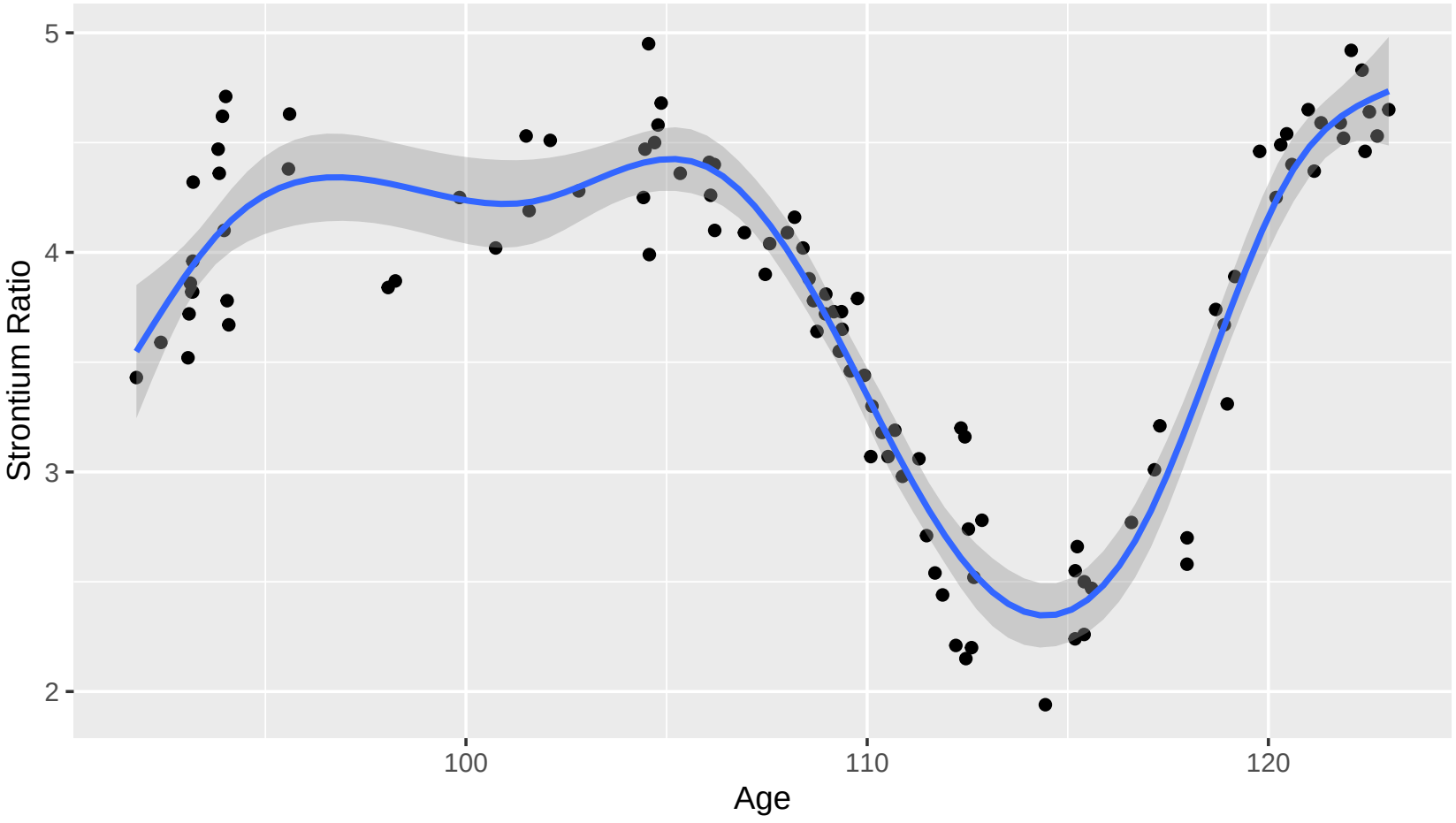

- Example from http://julianfaraway.github.io/brinla/

Infant mortality per municipalities

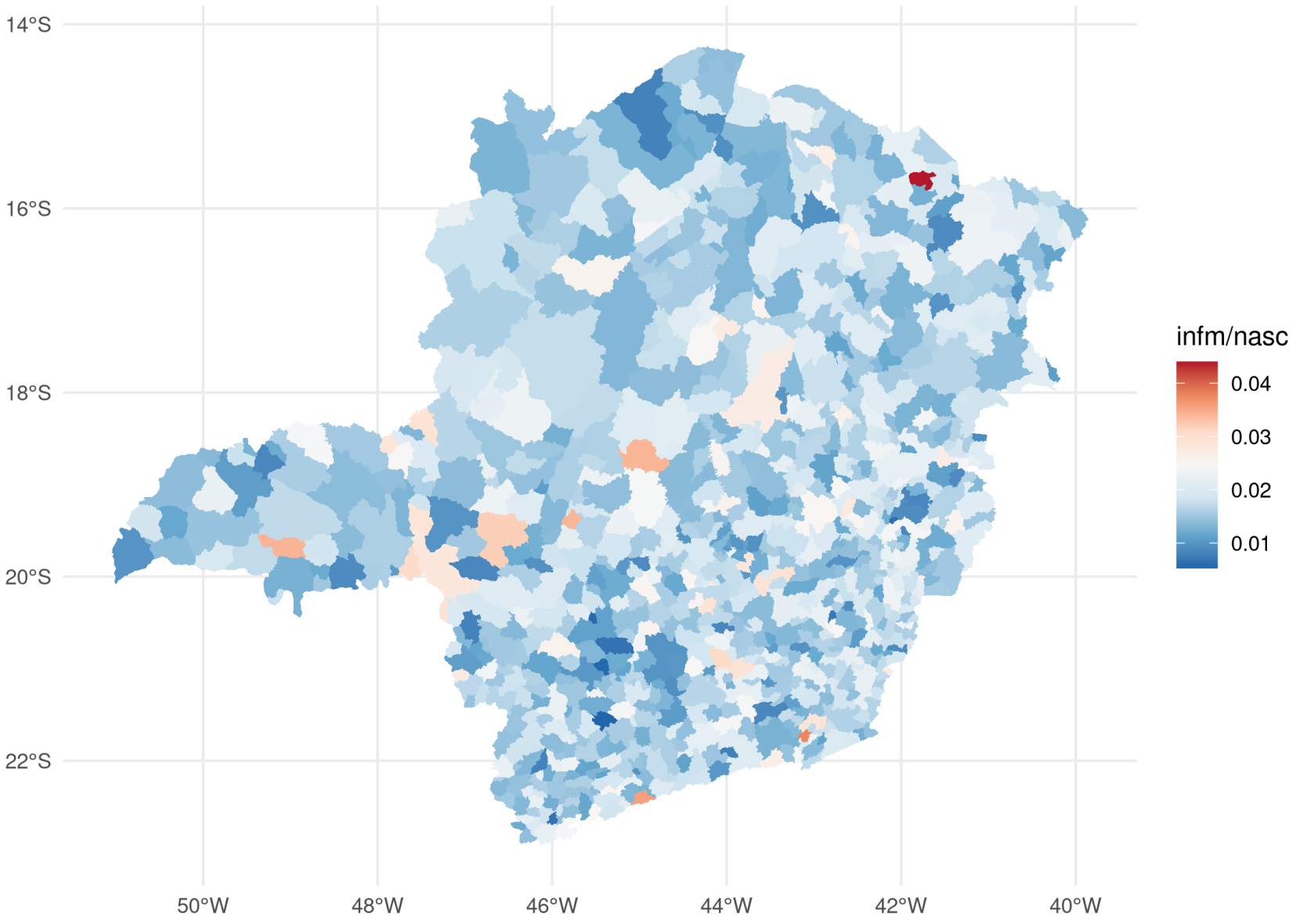

Structured random effects

Smoothed rates over time

- Temporally smooth infant death rate
  - is different for each year but similar for nearby years

Smoothed rates over time

- Temporally smooth infant death rate
  - is different for each year but similar for nearby years

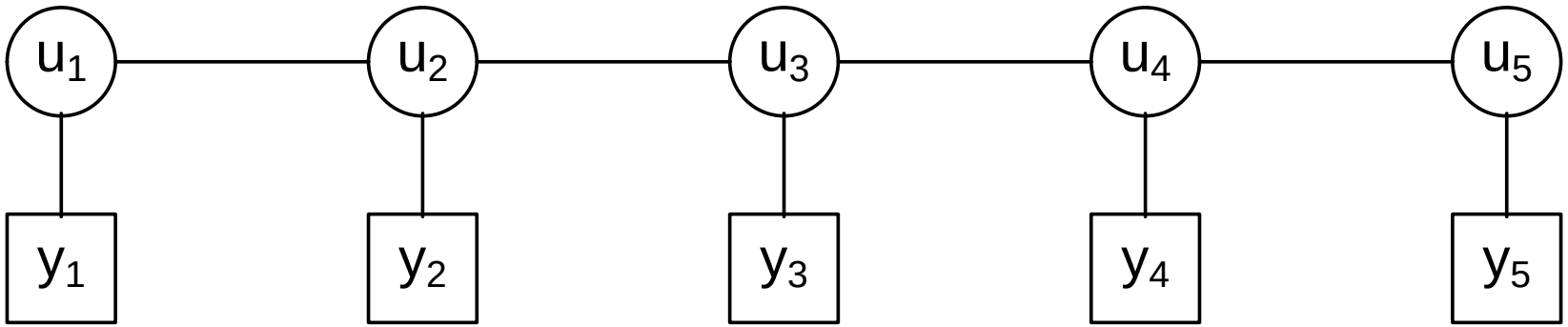

- The dependence on **u**
- **y** conditionally independent given **u**
  - y_i conditional on u_i is independent of y_{i-1} and of y_{i+1}

The RW1 prior

- It seems natural to borrow strength over time.
  - **u**: smoothing over time
  - ***R**andon **W**alk* - RW of first order: `rw1`
  - Gaussian distribution for the successive differences (**R** sparse)

$$\Delta_i = u_i - u_{i-1} \sim N(0, \tau^{-1})$$

The RW1 prior

- It seems natural to borrow strength over time.
  - **u**: smoothing over time
  - ***R**andon **W**alk* - RW of first order: `rw1`
  - Gaussian distribution for the successive differences (**R** sparse)

$$\Delta_i = u_i - u_{i-1} \sim N(0, \tau^{-1})$$

- The log of the (joint) distribution for **x** is

$$\log(\pi(\mathbf{u}|\tau)) \propto -\frac{\tau}{2}\sum_{i=2}^{n}(u_i - u_{i-1})^2 = -\frac{\tau}{2}\mathbf{u}'\mathbf{R}\mathbf{u},$$

where

$$\mathbf{R} = \begin{bmatrix} 1 & -1 & & & & & & \\ -1 & 2 & -1 & & & & & \\ & -1 & 2 & -1 & & & & \\ & & & \ddots & & & & \\ & & & & -1 & 2 & -1 & \\ & & & & & -1 & 2 & -1 \\ & & & & & & -1 & 1 \end{bmatrix}$$

The cyclic RW1

- When modeling daily/weekly/montly
  - 1st of January is similar to December, 31: cyclic random walk

$$
\begin{aligned}
\pi(\mathbf{u}|\theta) &\propto \exp\left\{-\frac{\theta}{2}\left[(u_1-u_n)^2+\sum_{i=2}^{n}(u_i-u_{i-1})^2\right]\right\} \\
&= \exp\left\{-\frac{\theta}{2}\mathbf{u}^T\mathbf{R}\mathbf{x}\right\}
\end{aligned}
$$

where, now,

$$
\mathbf{R} = \begin{bmatrix}
2 & -1 & & & & & & -1 \\
-1 & 2 & -1 & & & & & \\
 & -1 & 2 & -1 & & & & \\
 & & & \ddots & & & & \\
 & & & & -1 & 2 & -1 & \\
 & & & & & -1 & 2 & -1 \\
-1 & & & & & & -1 & 2
\end{bmatrix}
$$

- Cyclic second order is analogous.

Time series of counts model

- $y_i \geq 0$, for $i = 1, ..., n$
  - assuming conditional independence, thus

$$y_i | \lambda_i \sim \mathrm{Poisson}(\lambda_i)$$

  - Usually consider $\lambda_i = E_i \pi_i$

$$\log(\pi_i) = \beta_0 + u_i$$

  - u_i a structured random effect

Time series of counts model

- $y_i \geq 0$, for $i = 1, ..., n$
  - assuming conditional independence, thus

$$y_i | \lambda_i \sim \text{Poisson}(\lambda_i)$$

  - Usually consider $\lambda_i = E_i \pi_i$

$$\log(\pi_i) = \beta_0 + u_i$$

  - u_i a structured random effect
- $\mathbf{x} = \{\beta_0, u_1, \ldots, u_n\}$ is assumed a Latent Gaussian Model

Time series of counts model

- $y_i \geq 0$, for $i = 1, ..., n$
  - assuming conditional independence, thus

$$y_i | \lambda_i \sim \text{Poisson}(\lambda_i)$$

  - Usually consider $\lambda_i = E_i \pi_i$

$$\log(\pi_i) = \beta_0 + u_i$$

  - u_i a structured random effect
- $\mathbf{x} = \{\beta_0, u_1, \ldots, u_n\}$ is assumed a Latent Gaussian Model
- τ: (local) precision parameter for $(u_i - u_{i-1})$

Model fit in INLA

$$
\begin{aligned}
y_i|\lambda_i &\sim \text{Poisson}(\lambda_i) && \rightarrow \text{likelihood} \\
\beta_0 &\sim N(0, \text{a}) && \rightarrow \text{a known} \\
\mathbf{u}|\tau &\sim N(\mathbf{0}, (\tau\mathbf{R})^-) && \rightarrow \text{GMRF} \\
\tau &\sim p(\tau) && \rightarrow \text{prior distribution}
\end{aligned}
$$

Smoothing more

Gaussian distribution for the second order differences (`rw2`)

$$\Delta_i^2 = u_i - 2u_{i-1} + u_{i-2} \sim N(0, \tau^{-1})$$

The "same" model in space

$$y_i \sim \mathrm{Poisson}(E_i r_i)$$

$$\log(r_i) = \alpha + \beta X_i + u_i$$

- Add u_i: random effect to vary smoothly over neighboring areas

The "same" model in space

$$y_i \sim \mathrm{Poisson}(E_i r_i)$$

$$\log(r_i) = \alpha + \beta X_i + u_i$$

- Add u_i: random effect to vary smoothly over neighboring areas
- Besag (1974), Besag, York, and Mollié (1991) and Besag and Kooperberg (1995)

The "same" model in space

$$y_i \sim \text{Poisson}(E_i r_i)$$

$$\log(r_i) = \alpha + \beta X_i + u_i$$

- Add u_i: random effect to vary smoothly over neighboring areas
- Besag (1974), Besag, York, and Mollié (1991) and Besag and Kooperberg (1995)
- The simplest Besag's model:

$$\pi(u_i|\mathbf{u}_{-i}, \tau) \sim N(\frac{1}{n_i}\sum_{j\sim i} u_j, \frac{1}{n_i\tau})$$

  where $j \sim i$ means j *neighbor of* i.
- n_i is the number of neighbors of area i
- $u_i|u_{-i}$, the distribution at area i given all the others

The Besag's model

- From a set of conditional distributions

$$\pi(\mathbf{u}|\tau) \quad = \quad \pi(u_1, .., u_n|\tau)$$

The Besag's model

- From a set of conditional distributions

$$\begin{aligned}\pi(\mathbf{u}|\tau) &= \pi(u_1, .., u_n|\tau) \\ &\propto \exp\left(-\sum_i^n \frac{\tau}{2}(u_i - \frac{1}{n_i}\sum_{j\sim i} u_j)^2\right)\end{aligned}$$

The Besag's model

- From a set of conditional distributions

$$
\begin{aligned}
\pi(\mathbf{u}|\tau) &= \pi(u_1, .., u_n|\tau) \\
&\propto \exp\left(-\sum_i^n \frac{\tau}{2}(u_i - \frac{1}{n_i}\sum_{j\sim i} u_j)^2\right) \\
&= \exp\left(-\frac{\tau}{2}\sum_i \sum_{j\sim i}(u_i - u_j)^2\right)
\end{aligned}
$$

The Besag's model

- From a set of conditional distributions

$$
\begin{aligned}
\pi(\mathbf{u}|\tau) &= \pi(u_1, .., u_n|\tau) \\
&\propto \exp\left(-\sum_i^n \frac{\tau}{2}(u_i - \frac{1}{n_i}\sum_{j\sim i} u_j)^2\right) \\
&= \exp\left(-\frac{\tau}{2}\sum_i \sum_{j\sim i}(u_i - u_j)^2\right) \\
&= \exp\left(-\frac{\tau}{2}\mathbf{u}^T\mathbf{R}\mathbf{u}\right)
\end{aligned}
$$

- $\mathbf{R}$ is the precision structure, **sparse**:

$$
\mathbf{R}_{ij} = \begin{cases} n_i & \text{if } i = j \\ -1 & \text{if } j \sim i \\ 0 & \text{otherwise} \end{cases}
$$

The Besag's model

- From a set of conditional distributions

$$\begin{aligned}
\pi(\mathbf{u}|\tau) &= \pi(u_1, .., u_n|\tau) \\
&\propto \exp\left(-\sum_i^n \frac{\tau}{2}(u_i - \frac{1}{n_i}\sum_{j\sim i} u_j)^2\right) \\
&= \exp\left(-\frac{\tau}{2}\sum_i \sum_{j\sim i}(u_i - u_j)^2\right) \\
&= \exp\left(-\frac{\tau}{2}\mathbf{u}^T\mathbf{R}\mathbf{u}\right)
\end{aligned}$$

- $\mathbf{R}$ is the precision structure, **sparse**:

$$\mathbf{R}_{ij} = \begin{cases} n_i & \text{if } i = j \\ -1 & \text{if } j \sim i \\ 0 & \text{otherwise} \end{cases}$$

- *Gaussian Markov Random Field* - GMRF, Rue and Held (2005)

Notes

- The **R** matrix has rank deficiency equals 1
  - add a constraint if there is an intercept
- The τ is a local precision
  - scale the model as proposed in Sørbye and Rue (2014)

$$R^* = v_0 R, \text{ where } v_0 = \exp(\log(\sum_i (R^-)_{ii}))$$

- See other options from

```
names(inla.models()$latent)
```

References

Besag, J. 1974. "Spatial Interaction and the Statistical Analysis of Lattice Systems." *JRSS-B* 36 (2): 192–236.

Besag, J., and C. Kooperberg. 1995. "On Conditional and Intrinsic Autoregression." *Biometrika* 82 (4): 733–46.

Besag, J., J. York, and A. Mollié. 1991. "Bayesian Image Restoration, with Two Applications in Spatial Statistics." *Annals of the Institude of Statistical Mathematics* 43 (1): 1–59.

Rue, H., and L. Held. 2005. *Gaussian Markov Random Fields: Theory and Applications*. Monographs on Statistics & Applied Probability. Boca Raton: Chapman; Hall.

Sørbye, S. H., and H. Rue. 2014. "Scaling Intrinsic Gaussian Markov Random Field Priors in Spatial Modelling." *Spatial Statistics* 8 (May): 39–51.