National Semiconductor

June 1989

54LS283/DM54LS283/DM74LS283 4-Bit Binary Adders with Fast Carry

General Description

These full adders perform the addition of two 4-bit binary numbers. The sum (Σ) outputs are provided for each bit and the resultant carry (C4) is obtained from the fourth bit. These adders feature full internal look ahead across all four bits. This provides the system designer with partial look-ahead performance at the economy and reduced package count of a ripple-carry implementation.

The adder logic, including the carry, is implemented in its true form meaning that the end-around carry can be accomplished without the need for logic or level inversion.

Features

- Full-carry look-ahead across the four bits
- Systems achieve partial look-ahead performance with the economy of ripple carry
- Typical add times
  Two 8-bit words 25 ns
  Two 16-bit words 45 ns
- Typical power dissipation per 4-bit adder 95 mW
- Alternate Military/Aerospace device (54LS283) is available. Contact a National Semiconductor Sales Office/Distributor for specifications.

Connection Diagram

Dual-In-Line Package

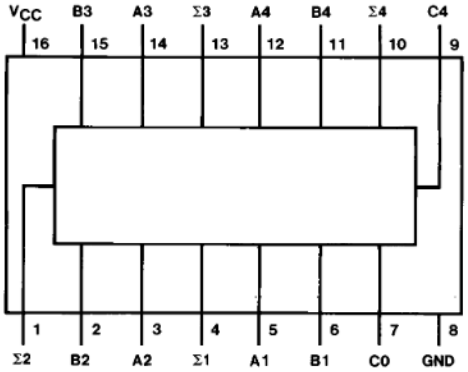

TL/F/6421–1

Order Number 54LS283DMQB, 54LS283FMQB, 54LS283LMQB, DM54LS283J, DM54LS283W, DM74LS283M or DM74LS283N
See NS Package Number E20A, J16A, M16A, N16E or W16A

© 1995 National Semiconductor Corporation RRD-B30M105/Printed in U. S. A.

Absolute Maximum Ratings (Note)

If Military/Aerospace specified devices are required, please contact the National Semiconductor Sales Office/Distributors for availability and specifications.

Supply Voltage	7V
Input Voltage	7V
Operating Free Air Temperature Range	
DM54LS and 54LS	−55°C to +125°C
DM74LS	0°C to +70°C
Storage Temperature Range	−65°C to +150°C

Note: *The "Absolute Maximum Ratings" are those values beyond which the safety of the device cannot be guaranteed. The device should not be operated at these limits. The parametric values defined in the "Electrical Characteristics" table are not guaranteed at the absolute maximum ratings. The "Recommended Operating Conditions" table will define the conditions for actual device operation.*

Recommended Operating Conditions

Symbol	Parameter	DM54LS283			DM74LS283			Units
		Min	Nom	Max	Min	Nom	Max	
V_{CC}	Supply Voltage	4.5	5	5.5	4.75	5	5.25	V
V_{IH}	High Level Input Voltage	2			2			V
V_{IL}	Low Level Input Voltage			0.7			0.8	V
I_{OH}	High Level Output Current			−0.4			−0.4	mA
I_{OL}	Low Level Output Current			4			8	mA
T_A	Free Air Operating Temperature	−55		125	0		70	°C

Electrical Characteristics over recommended operating free air temperature range (unless otherwise noted)

Symbol	Parameter	Conditions		Min	Typ (Note 1)	Max	Units
V_I	Input Clamp Voltage	V_{CC} = Min, I_I = −18 mA				−1.5	V
V_{OH}	High Level Output Voltage	V_{CC} = Min, I_{OH} = Max, V_{IL} = Max, V_{IH} = Min	DM54	2.5	3.4		V
			DM74	2.7	3.4		
V_{OL}	Low Level Output Voltage	V_{CC} = Min, I_{OL} = Max, V_{IL} = Max, V_{IH} = Min	DM54		0.25	0.4	V
			DM74		0.35	0.5	
		I_{OL} = 4 mA, V_{CC} = Min	DM74		0.25	0.4	
I_I	Input Current @ Max Input Voltage	V_{CC} = Max, V_I = 7V	A, B			0.2	mA
			C0			0.1	
I_{IH}	High Level Input Current	V_{CC} = Max, V_I = 2.7V	A, B			40	μA
			C0			20	
I_{IL}	Low Level Input Current	V_{CC} = Max, V_I = 0.4V	A, B			−0.8	mA
			C0			−0.4	
I_{OS}	Short Circuit Output Current	V_{CC} = Max (Note 2)	DM54	−20		−100	mA
			DM74	−20		−100	
I_{CC1}	Supply Current	V_{CC} = Max (Note 3)			19	34	mA
I_{CC2}	Supply Current	V_{CC} = Max (Note 4)			22	39	mA

Note 1: All typicals are at V_{CC} = 5V, T_A = 25°C.

Note 2: Not more than one output should be shorted at a time, and the duration should not exceed one second.

Note 3: I_{CC1} is measured with all outputs open, all B inputs low and all other inputs at 4.5V, or all inputs at 4.5V.

Note 4: I_{CC2} is measured with all outputs open and all inputs grounded.

Switching Characteristics at V_{CC} = 5V and T_A = 25°C (See Section 1 for Test Waveforms and Output Load)

Symbol	Parameter	From (Input) To (Output)	R_L = 2 kΩ				Units
			C_L = 15 pF		C_L = 50 pF		
			Min	Max	Min	Max	
t_{PLH}	Propagation Delay Time Low to High Level Output	C0 to Σ1, Σ2		24		28	ns
t_{PHL}	Propagation Delay Time High to Low Level Output	C0 to Σ1, Σ2		24		30	ns
t_{PLH}	Propagation Delay Time Low to High Level Output	C0 to Σ3		24		28	ns
t_{PHL}	Propagation Delay Time High to Low Level Output	C0 to Σ3		24		30	ns
t_{PLH}	Propagation Delay Time Low to High Level Output	C0 to Σ4		24		28	ns
t_{PHL}	Propagation Delay Time High to Low Level Output	C0 to Σ4		24		30	ns
t_{PLH}	Propagation Delay Time Low to High Level Output	A_i or B_i to Σ_i		24		28	ns
t_{PHL}	Propagation Delay Time High to Low Level Output	A_i or B_i to Σ_i		24		30	ns
t_{PLH}	Propagation Delay Time Low to High Level Output	C0 to C4		17		24	ns
t_{PHL}	Propagation Delay Time High to Low Level Output	C0 to C4		17		25	ns
t_{PLH}	Propagation Delay Time Low to High Level Output	A_i or B_i to C4		17		24	ns
t_{PHL}	Propagation Delay Time High to Low Level Output	A_i or B_i to C4		17		26	ns

Function Table

Input				Outputs					
				When C0 = L			When C0 = H		
				When C2 = L			When C2 = H		
A1 / A3	B1 / B3	A2 / A4	B2 / B4	Σ1 / Σ3	Σ2 / Σ4	C2 / C4	Σ1 / Σ3	Σ2 / Σ4	C2 / C4
L	L	L	L	L	L	L	H	L	L
H	L	L	L	H	L	L	L	H	L
L	H	L	L	H	L	L	L	H	L
H	H	L	L	L	H	L	H	H	L
L	L	H	L	L	H	L	H	H	L
H	L	H	L	H	H	L	L	L	H
L	H	H	L	H	H	L	L	L	H
H	H	H	L	L	L	H	H	L	H
L	L	L	H	L	H	L	H	H	L
H	L	L	H	H	H	L	L	L	H
L	H	L	H	H	H	L	L	L	H
H	H	L	H	L	L	H	H	L	H
L	L	H	H	L	L	H	H	L	H
H	L	H	H	H	L	H	L	H	H
L	H	H	H	H	L	H	L	H	H
H	H	H	H	L	H	H	H	H	H

TL/F/6421–3

H = High Level, L = Low Level

Note: Input conditions at A1, B1, A2, B2, and C0 are used to determine outputs Σ1 and Σ2 and the value of the internal carry C2. The values at C2, A3, B3, A4, and B4 are then used to determine outputs Σ3, Σ4, and C4.

Logic Diagram

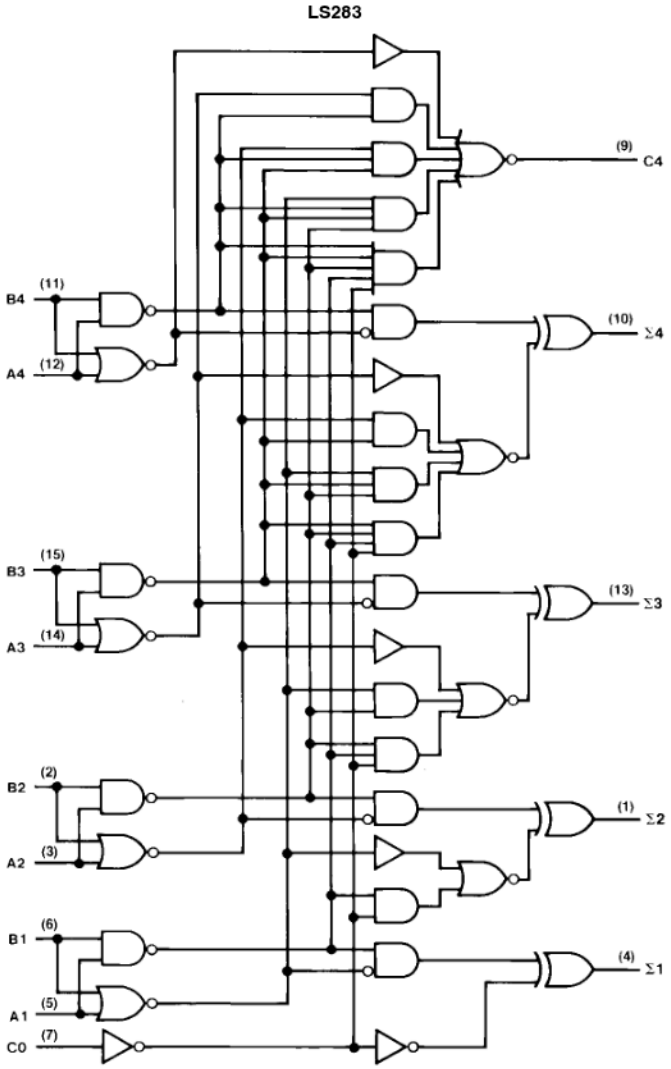

TL/F/6421–2

Physical Dimensions inches (millimeters)

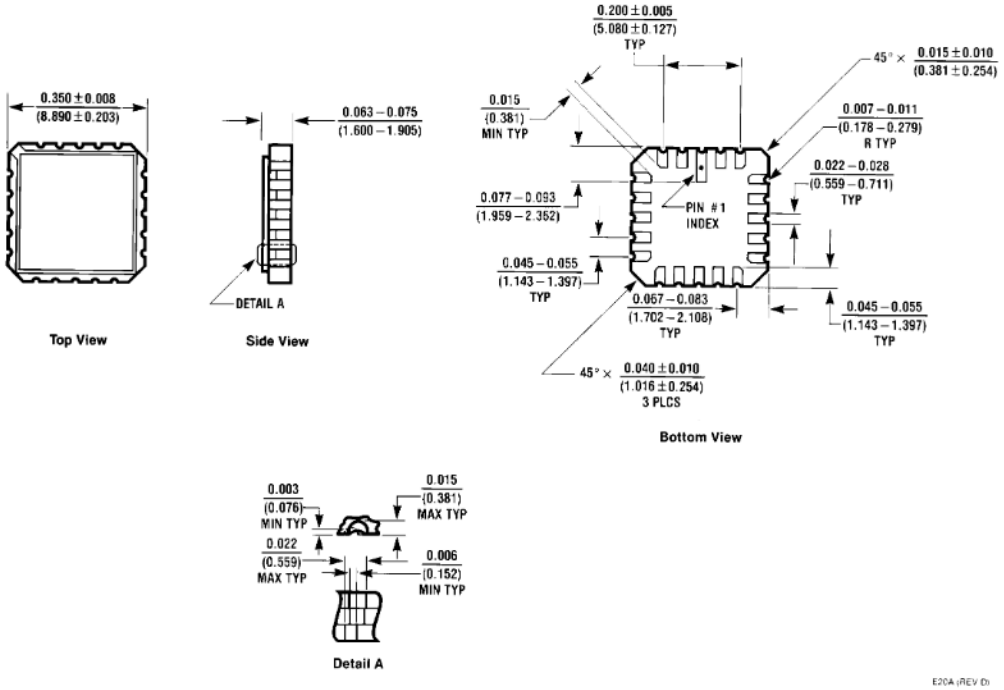

Ceramic Leadless Chip Carrier Package (E)
Order Number 54LS283LMQB
NS Package Number E20A

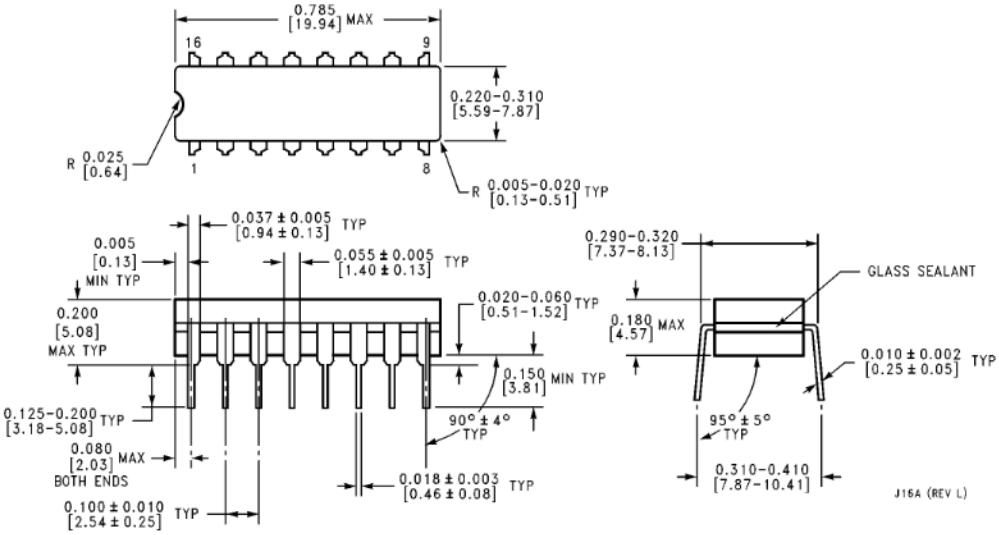

16-Lead Ceramic Dual-In-Line Package (J)
Order Number 54LS283DMQB or DM54LS283J
NS Package Number J16A

Physical Dimensions inches (millimeters) (Continued)

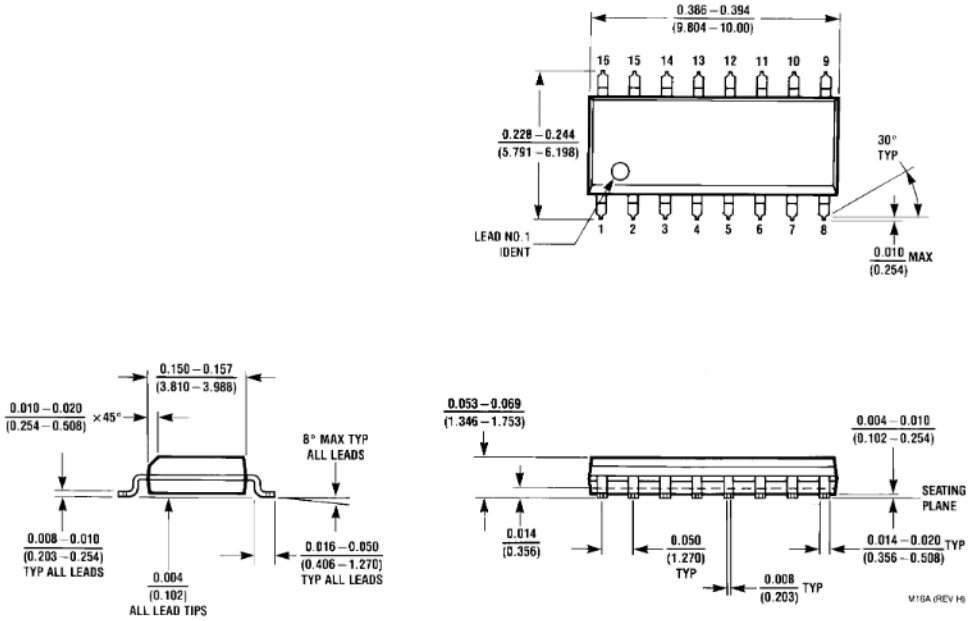

16-Lead Small Outline Molded Package (M)
Order Number DM74LS283M
NS Package Number M16A

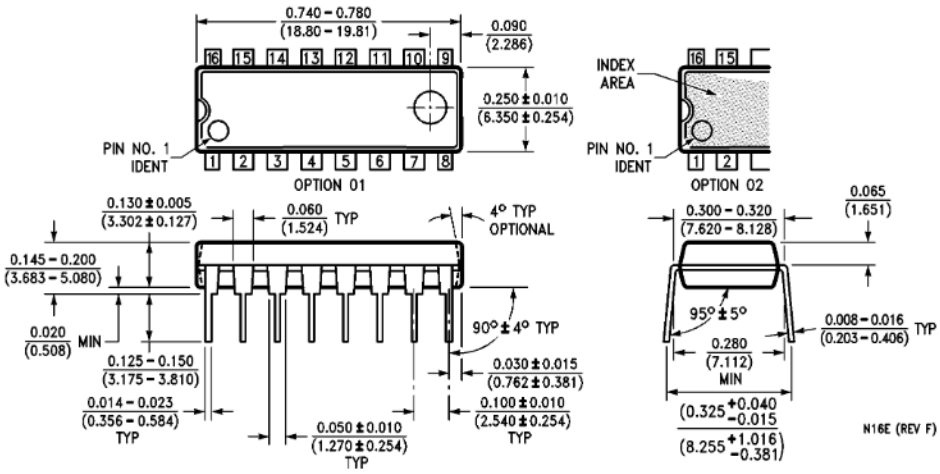

16-Lead Molded Dual-In-Line Package (N)
Order Number DM74LS283N
NS Package Number N16E

Physical Dimensions inches (millimeters) (Continued)

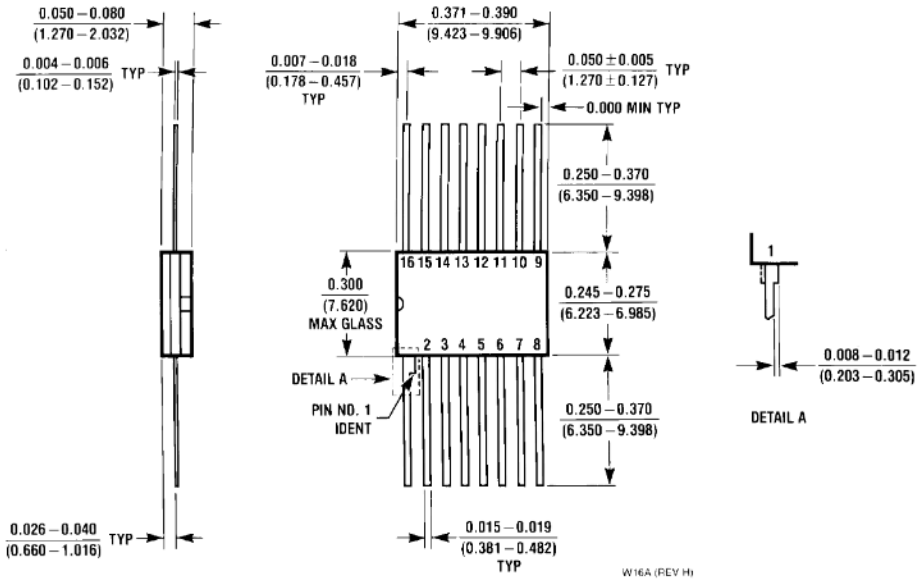

16-Lead Ceramic Flat Package (W)
Order Number 54LS283FMQB or DM54LS283W
NS Package Number W16A

LIFE SUPPORT POLICY

NATIONAL'S PRODUCTS ARE NOT AUTHORIZED FOR USE AS CRITICAL COMPONENTS IN LIFE SUPPORT DEVICES OR SYSTEMS WITHOUT THE EXPRESS WRITTEN APPROVAL OF THE PRESIDENT OF NATIONAL SEMICONDUCTOR CORPORATION. As used herein:

1. Life support devices or systems are devices or systems which, (a) are intended for surgical implant into the body, or (b) support or sustain life, and whose failure to perform, when properly used in accordance with instructions for use provided in the labeling, can be reasonably expected to result in a significant injury to the user.
2. A critical component is any component of a life support device or system whose failure to perform can be reasonably expected to cause the failure of the life support device or system, or to affect its safety or effectiveness.

National Semiconductor Corporation
1111 West Bardin Road
Arlington, TX 76017
Tel: 1(800) 272-9959
Fax: 1(800) 737-7018

National Semiconductor Europe
Fax: (+49) 0-180-530 85 86
Email: cnjwge@tevm2.nsc.com
Deutsch Tel: (+49) 0-180-530 85 85
English Tel: (+49) 0-180-532 78 32
Français Tel: (+49) 0-180-532 93 58
Italiano Tel: (+49) 0-180-534 16 80

National Semiconductor Hong Kong Ltd.
13th Floor, Straight Block,
Ocean Centre, 5 Canton Rd.
Tsimshatsui, Kowloon
Hong Kong
Tel: (852) 2737-1600
Fax: (852) 2736-9960

National Semiconductor Japan Ltd.
Tel: 81-043-299-2309
Fax: 81-043-299-2408

National does not assume any responsibility for use of any circuitry described, no circuit patent licenses are implied and National reserves the right at any time without notice to change said circuitry and specifications.