Simulation of Allothermal Dual-Fluidised Bed Biomass Gasification with BECCU via in-situ CaL Looping, for the Production of Renewable Syngas

Anastasia Perysinakis, Dr Chunfei Wu

Abstract

Depleting fossil fuel reserves and high CO_2 emissions have driven research into biomass gasification as an alternative to the production of energy-dense fuels. Significant challenges include low energy efficiencies, ash/tar formation, and CO_2 emissions. Autothermal CO_2 sorbent technologies based on CaO have been proposed, promoting in-situ heat generation and ash/tar reduction via CO_2 and steam gasification agents. However, these solutions require external effluent streams and high thermal inputs respectively. In this study, an allothermal, dual-fluidised air-gasification bed is proposed and simulated on Aspen Plus. Compared to autothermal cases, CO_2 emissions were decreased from 6% to 1% and product gas quality increased from 25% to 39% with negligible change in thermal efficiency.

Key phrases: *Biomass gasification, CaL, Calcium Oxide Looping, Sustainable Energy, Biofuel, Allothermal DFB, BECCU*

Acronyms

Bioenergy Coupled with Carbon Capture & Utilisation	**BECCU**
CaO Looping	**CaL**
Cold Gas Efficiency	**CGE**
Dual-fluidised bed reactor	**DFB**
Enhanced Oil Recovery	**EOR**
European Union	**EU**
Greenhouse Gas	**GHG**
Heat & Power	**H&P**
Lower Heating Value	**LHV**
Process Flow Diagram	**PFD**
Sorption-Enhanced Gasification	**SEG**
Synthetic Natural Gas	**SNG**
Volatile Content	**VC**

Table of Contents

1. Introduction 5
2. Methodology 10
3. Results and Discussion 13
4. Conclusions 17
5. References 18
6. Appendixes 22

1. Introduction

The fossil fuel industry is worth 80% of total primary energy consumption, and demand is expected to increase by 300% at the end of the century [1]. Globally, policy makers are centring the mitigation of greenhouse gas (GHG) emissions and local pollution effects as drivers for reducing fossil fuel dependency (in conjunction with concerns over depleting reserves) [2]. Further, it is increasingly evident that existing multilateral trade relationships based on fossil fuel imports threaten international energy security and diplomatic freedoms, specifically in the European Union (EU) [3].

As such, research into the utilisation of biomass (as a renewable source of stored solar energy) to promote resource diversification is pervasive; more than 50 countries are engaged in the development of related 'bioeconomy' strategies [4] dependent on inter-sectoral reform for the sustainable exploitation of biological resources [5]. Resultingly, bioenergy production has grown in line with EU policy targets since 1990 [6]:

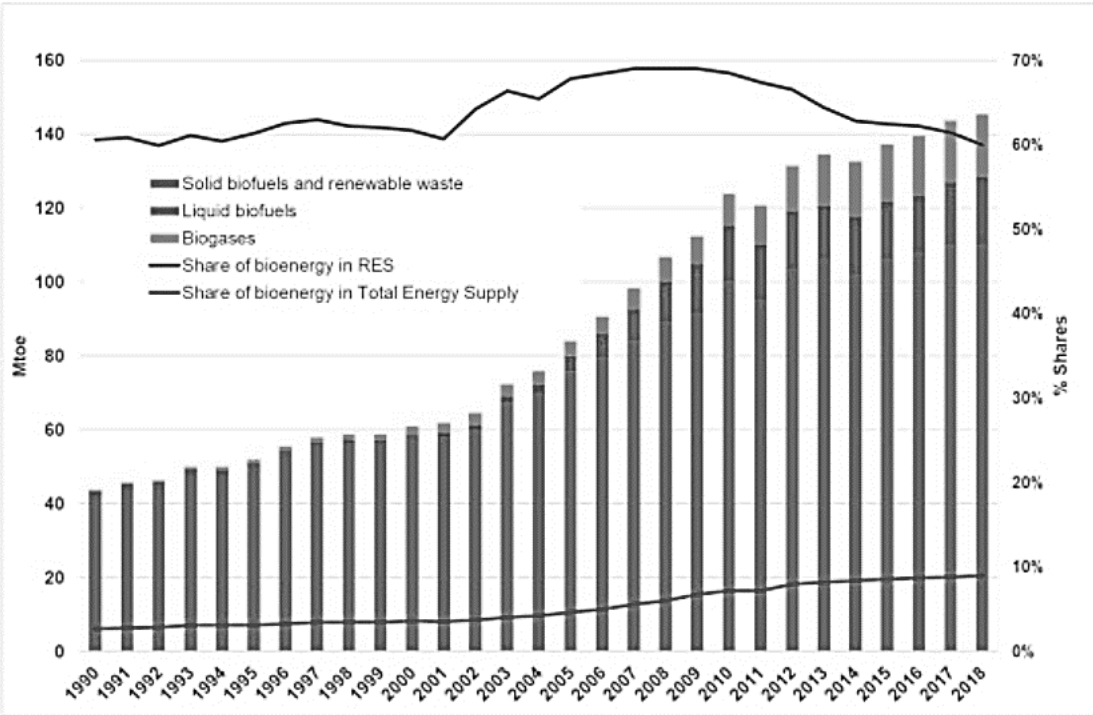

Figure 1: Growth in total bioenergy supply (EU) [6]

Biomass resources for application within a bioeconomy are obtained from a range of organic plant and animal materials such as wood, agricultural waste, food residue, industrial waste, energy crops and algae [7]. Notably, although previous studies into the potential risks of biofuel dependency have highlighted land-management and food-scarcity concerns [8], [7] argues that a focus on waste valorisation as regards to biomass will eliminate any proposed burden on land use, while positively

contributing towards land-management crises related to domestic and municipal waste over-production. The global biomass potential of energy crops alone is projected to represent 96 exajoules by 2050 (the business-as-usual scenario for net-zero GHG targets) [9], and the product-range of thermochemically processing biomass extends beyond direct heat and power (H&P) to include both liquid (notably via the Fischer-Tropsch process) and gaseous biofuels, as well as high-value chemical feedstocks. [10]

Company	Operation year and country	Feedstock	Product	Quantity (/year)	Web site
BioAmber (DNP/ard)	2010, France	Wheat-derived glucose	Succinic acid	3 kt	https://www.bio-amber.com/
BioAmber, Mitsui	2014, Canada	Glucose	Succinic acid	30–50 kt	
BioAmber, Mitsui	On process, North America	–	Succinic acid	70–200 kt	
Reverdia	2012, Italy	Starch	Succinic acid	10 kt	http://www.reverdia.com/
Myriant	2013, USA	Sorghum and lignocellulosic sugars	Succinic acid	14 kt	https://www.myriant.com/
Succinity	2014, Spain	Various renewable feed stocks	Succinic acid	10 kt	http://www.succinity.com/
PTT MCC Biochem	2010, Thailand	Biomass	Succinic acid	36 kt	http://www.pttmcc.com/
	2015, Thailand	Biomass	PBS	20 kt	
Nature Works™			Lactic acid	140 kt	https://www.natureworksllc.com/
Flexible Solutions	2009, Canada	Sugar	Aspartic acid	5–15 kt	https://www.flexiblesolutions.com/
DuPont Tate & Lyle BioProducts	2004, USA		1,3-propanediol.		http://www.duponttateandlyle.com
Huangshi Xinghua Biochemical Ltd.	–, China	Sweet potato and corn	Citric acid and citrate salt	60 kt	http://www.xinghuabiochem.com/
Novamont	2016, Italy	Sugars	BDO	30 kt	https://www.novamont.com/
	2018, France	Plant origin	Biopolyester	100 kt	
COFCO/Sinopec	2011, China	Corn stover	Ethanol	3 MG	https://www.cofcointernational.com/
Diamond Green Diesel	2013, USA	Animal fats, used cooking oil, and inedible corn oil	Diesel	275–675 MG	https://www.diamondgreendiesel.com/
Mascoma	2014, USA	Wood waste	Ethanol	20–80 MG	https://www.mascoma.com/
BlueFire Renewables	2013, USA	Sorted MSW, wood waste, and agricultural residues	Ethanol	19 MG	https://bfreinc.com/
Enerkem	2015, Canada	Sorted MSW	Methanol, Ethanol	10 MG	https://enerkem.com/
Abengoa Bioenergy	2011, USA	Corn residues	Ethanol	25 MG	http://www.abengoabioenergy.com/
	2010, Netherlands	Corn or wheat	Ethanol	127 MG	
Abengoa	2014, USA	Crop residues	Ethanol	25 MG	www.abengoa.com
	2014, Belgium	Wood chips and agro-residues	Electrical and thermal power	215 and 100 MW	
CalBio	2019, USA	Dairy waste	Electricity	320 MW	https://calbioenergy.com/
Avantium	2018, Netherlands	Wood chips	Sugars and lignin	130 kt	https://www.avantium.com/
VärmlandsMetanol AB	2006, Sweden	Forest residue	Methanol	130,000 m^3	http://www.varmlandsmetanol.se/index.htm

Figure 2: Examples of large-scale biomass operational companies and their primary products [7]

Further to the renewable and carbon-neutral qualities associated with biomass, benefits of its use include high volatile content (VC) levels, high reactivities and low ash and SO_x pollutant levels in comparison to coal, which respectively promote thermochemical conversion and reduce the cost-burden associated with solid-residue and post-processing [11].

Gasification is an industrially significant thermochemical transformation route for the conversion of carbonaceous material in biomass to combustible, energy-dense gaseous fuel (syngas) and small quantities of char, ash, tar, and oil. Product derivatives have demonstrated applications in H&P generation in boilers, gas engines and fuel cells (dependent on gas quality). [12] The general term describes the drying, pyrolysis, reduction and partial oxidation of organic carbonaceous material with a gasification agent, typically occurring at temperatures above 700°C over a complex series of serial/parallel processes (crucially dependent on factors such as the feedstock type/quality, operative

conditions and reactor design) [13]. Biomass gasification has not yet achieved market maturation: one industrial 100 kW plant utilising a downdraft reactor supplies just 70 hours of energy to the grid per 1000 hours of operation [14]. A recent study into low-energy biomass gasification utilising CO_2 as a gasification agent identified the following key barriers to uptake:

1. *Energy efficiency* – although exergetic reports indicate that biomass gasification is more efficient than combustion [15], there is still a heat of reaction associated with drying raw biomass (due to a high moisture content of ~5%-35%), heating and endothermic reactions within the process [16]. In conventional gasification, heat generation can be in-part achieved by the exothermic combustion of biomass with air, which decreases syngas quality as well as heat efficiency [17]. Further, the utilisation of either pure oxygen or steam as a gasification agent, is encumbered with high process energy requirements relating to air separation units or steam generation, respectively. Efficient heat management is therefore crucial. Known methods of effective heating include intermittent operation of a single fluidised bed, circulation of particles between interconnected beds and indirectly heated fluidised beds [18]. Efforts into optimising feedstock for energy density, quality (raw biomass is characterised by a low calorific value and high molar ratios of O/C and H/C [19]) and cost, as well as reducing CAPEX and maintenance burdens are also pervasive [20].
2. *CO_2 emissions* – The CO_2 emissions associated with both the syngas product and process intensity are consequential to the efficacy of this technology as a carbon-neutral process. However, the potential for 'bioenergy coupled with carbon capture and utilisation' (BECCU) technology integration can mitigate carbon emissions (direct and indirect), with the further potential of facilitating a negative emission energy system [6]. A recent study into the adsorption of CO_2 by CaO (the reversible carbonation of lime) in a fixed bed looping system found a CO_2 emission reduction of 58.7%, with a negative calorific value of gas achieved (19.74 MJ/m^3) and commented on the purported catalytic qualities of CaO in this context [21], while [22] noted up to 90% hydrogen yield (significant to related hydrogen economy aspirations and reduction of natural gas dependency) and a lower intermediary temperature of 650°C over a Pd/Co-Ni catalyst.
3. *Ash agglomeration* – ash composition is complex, although it is known that alkali silicates and sulphates are deposited on the gasifier wall, contributing to sintering. This increases the heat transfer resistance and reduces the stability of the system – effects from which it is difficult to recover [17]. The agglomeration and defluidisation mechanisms remain an area in need of further study; thus far, only a few investigations have been report, specifically into the effects of gas composition and fusion temperature on ash sintering (wherein it was found that lower temperatures below the softening point mitigate ash sintering) in both experimental and simulated environments [23, 24].

Although autothermal processes (in which the heat of gasification is provided *in-situ)* are well documented, they typically rely on combustion processes which can dilute the syngas quality [25]. In [22], CaO looping technology (CaL) resulted in the lower gasifier temperature described due to the in-situ, reversible exothermic reaction which provides a temperature control mechanism that in-turn has been shown to reduce sintering effects as well as facilitate CO_2 removal. Reduced CO_2 further impacts the system equilibrium by shifting towards a higher hydrogen yield and consumption of CO. Illustrative attention can be brought to the water-gas shift reaction (Equation 1), occurring in the reduction phase [14] and the oxidation of CO (Equation 2).

N.B. Enthalpies of reaction given at reference temperature 298K and reference pressure 1 atm.

Equation 1: Water-gas shift reaction

$$CO_g + H_20_g \rightarrow CO_{2(g)} + H_{2(g)}\ (+42.3\ kJ/g)$$

Equation 2:

$$CO + \frac{1}{2}O_2 \rightarrow CO_2\ (-283.1kJ/mol)$$

[26] reviews the evolution and scale-up applicability of CaL technologies (with reference primarily to investigations into non-renewable coal-fired contexts), commenting on their usefulness due to ease of retrofitting to existing processes, low environmental risk/high abundance of CaO, and wide applicability in areas such as Enhanced Oil Recovery (EOR) and hydrogen production. The authors further elucidate the utility of the multicyclic calcination-carbonation of $CaCO_3$ occurring at 650°C (Equation 3) in providing both thermochemical energy and carbon capture/storage solutions, as the below equilibrium can be manipulated accordingly. However, it is noted that counterbalancing the equilibrium with $CaCO_3$ leads to increased inert solid flow that could lead to difficulties regarding equipment sizing, energy storage density and higher energy consumption:

Equation 3:

$$CaCO_{3(s)} \rightleftharpoons CaO_{(s)} + CO_{2(g)}\ (\Delta H_r^0 = -177.8kJ/mol)$$

More pertinently, [27] is the most recent published study reviewing the process development and performance of flexible CaL technologies for application in a biomass gasification context (sorption-enhanced gasification [SEG]): as the required heat for biomass gasification inside the gasifier is 206 kJ/mol [28], the exothermic carbonation reaction can provide contributory heat as in [28]. The authors simulated a proposed model on Aspen Plus, based on a low-pressure, low-temperature dual-fluidised bed reactor with steam as a gasification agent. A downstream Sabatier reactor was employed to achieve high CH_4 yields for the SNG scenario. It was found that process parameters could be flexibly adjusted to achieve either high-purity bio-H_2 (>96 mol) or high-purity bio-synthetic natural gas (SNG) (>95mol%), or any combination of products in-between. High

process efficiencies were achieved (62.2% lower heating value (LHV) for H_2 and 78%LHV for methane), with negligible NO_x, SO_2 and H_2S product content. Further, the temperature difference between the calciner and the integrated gasifier in the biomass context decreases the solid recirculation rate as opposed to conventional indirect gasifiers [29].

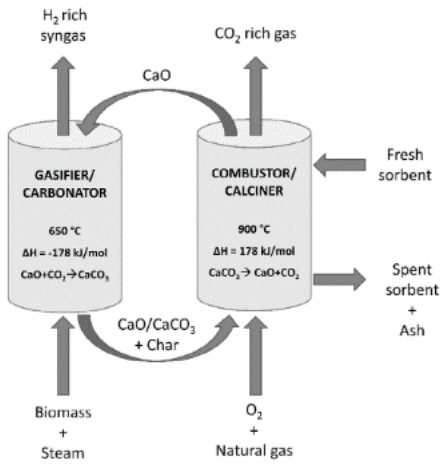

Figure 3: Scheme of sorption-enhanced gasification (SEG) based on CaL process with dial-fluidised bed [27]

Similarly, [28] investigated autothermal CaL technologies for the purpose of the reduction of ash sintering in downdraft biomass gasification. It found a 23.29% increase in H_2 concentration at 650°C with CaO than 750°C without CaO, and 14.11% at 550°C with CaO than at 650°C without Cao.

The catalytic properties of CaO as described in [21] are further examined in [27], in the context of tar reduction, as it has been found that it can favourably act as a catalyst for the cracking of tar (increasing conversion of carbon and reducing post-processing requirements) at CaO/fuel ratios >10, with little known adverse effects caused by the lower operating temperatures. [27] provides the only flexible, commercially viable solution to the above challenges ([28] and [30] do not optimise for process flexibility), while also producing negligible pollutant levels thus removing the necessity for an additional desulfurisation unit. With its inclusion of a flexibility objective, [27] details the addition of a posterior calcination reactor for the regeneration of CaO to produce a high-grade CO_2 stream as a valuable commodity (after separation from water), 20% of which is recycled back through the calcination bed to promote fluidisation. This is achieved by via combustion with high purity O_2 and natural gas.

Goal & Scope

The aim of this study is to simulate an applicable solution to the 3 challenges as described above, within the context of biomass gasification to produce high-value syngas via a negative CO_2 emission system (reflective more-so of the aims in [28] and [30]). The regeneration of CaO as

proposed in [27, 30] provides a cost and circular economy benefit, however efforts to convert the CO_2 in the regeneration flu gas to CO to increase the quality of syngas and increase the negative net-carbon gain (rather than producing a high-purity CO_2 stream) will be incorporated. In [30], the regeneration system and flu gas treatment were not expounded upon in the text, nor the schematic found in supplemental information. Further, the gasification agent simulated in [27] was steam, requiring a high initial heat loading, while CO_2 was used as the gasification agent in [30] to avoid direct air injection, requiring CO_2 flu gas from an external process stream. Therefore, investigation into utilising air as the gasification agent with the aim of a low-temperature, high-quality syngas output system centred in this study. This will be achieved by the pursuit of the following objectives:

- The inclusion of an integrated SEG system for the reduction of direct and indirect CO_2 emissions
- The inclusion of a feasible temperature control mechanism to reduce ash agglomeration and increase heat energy efficiency
- The addition of a calcination reactor for the regeneration of CaO
- The addition of a pure H_2 stream to react with the CO_2 product in the calcination reaction as such:

Equation 4:

$$CO_{2(g)} + H_{2(g)} \rightarrow CO_{(g)} + H_2O_{(g)}\ (-41.15kJ/mol)$$

2. Methodology

The proposed gasification process was simulated in Aspen Plus. The process was designed to optimise for a high-quality syngas product and regeneration of CaO, with additional conversion of the CO_2 flu gas within the calcination reactor.

The input parameters for the model in [27] were selected to enable a valuable comparison between models (Table 1): the heating values for the biomass feedstock in the study were obtained from the HCOALGEN and DCOALIG tools. However, [31] represents the most recent review of the gasification of non-woody biomass sources; arguably a more interesting challenge for this application due to their cheap nature (typically as agricultural waste) and cohesion with the waste valorisation objective as described above, despite their lower energy content. From the comprehensive agglomeration of biomass gasification feedstock data provided, beef cattle manure represents as a valuable feedstock for investigation in future investigations utilising this model, due to its global prevalence as well as its geographically relevant challenge to the bioeconomy of Northern Ireland [32].

Table 1: Biomass analyses of feedstock [27]

	Proxanal Analysis				Ultanal Analysis				
	M	A	FC	VM	C	H	O	N	S
Southern Pine Bark	9.22	0.63	29.68	69.63	51.13	6.1	41.96	0.14	0.04

An additional specific power consumption of 53.8 kJ/kg for the granulation of the feed is assumed in [27], although considered out of scope for the calculations in this study. The biomass feed is assumed to be 15°C ([27] applied torrefaction after pulverisation and diverted the excess heat from the output stream to the steam generator for gasification, while [30] investigated the effect of feedstock temperature and found little difference within the range 50-200°C).

All other input parameters for the SEG remain consistent with [27]:

Table 2: Model input parameters

Parameter	Value
Integrated carbonator temperature [°C]	650
Biomass Feed [°C]	15
Pressure [bar]	1.05
CaO/C ratio [mol/mol]	4.7
Air/carbon ratio [mol/mol]	1.8
Calciner temperature [°C]	900
CaO makeup/recycle ratio	0.03
Calcination conversion	0.9
Carbonation conversion	0.7

The SEG reactor was modelled as a dual-fluidised bed reactor (DFB) with air fluidisation as in [27] to facilitate superior heat integration via mixing [25]. The model integrated the carbonator reactor and the gasifier at 650°C to achieve the kinetic and chemical equilibrium balance of the carbonation reaction. In [30], the integrated gasification and carbonation sections were modelled in Aspen Plus on one downdraft reactor (generally selected for tar-reduction [33-35], while previous studies on downdraft autothermal CaL technologies conventionally separated the two stages for optimal simulation control in Aspen Plus [36]. In this study, an allothermal dual-compartment approach was taken to ensure minimal gas-phase mixing for a purer syngas product [25, 37]. Biomass was fed into a decomposition block (*RYield*) and mixer at 10kg/hr simulating the drying and pyrolysis sections of the gasifier. An *RGibbs* block (oxidation and reduction), and an *RStoic* block (carbonation) followed. The energy potentials of the carbonation and gasification reactors were unified with a heat

stream, and it was assumed that the carbon conversion was 30% as generally observed for DFB cases [29]. The process flow diagram (PFD) follows:

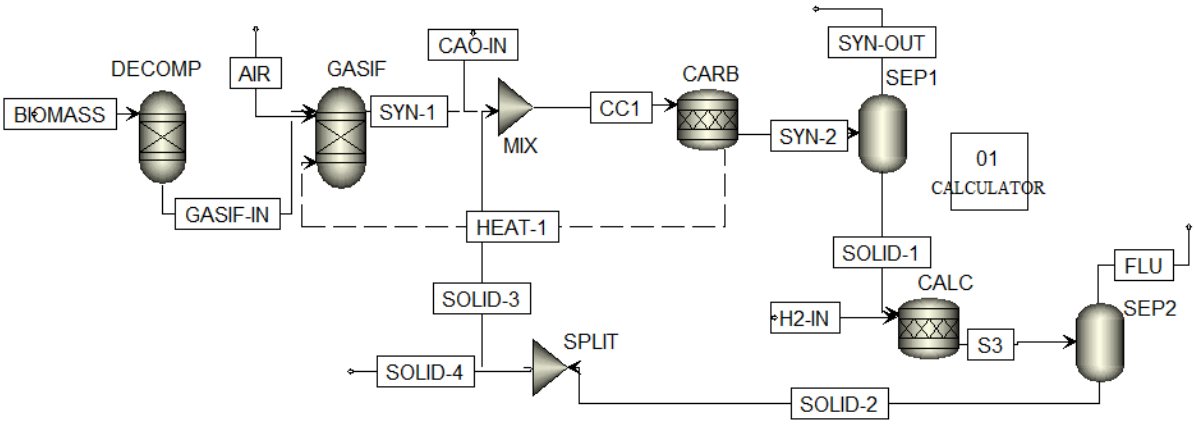

Figure 4: Proposed PFD (Aspen Plus)

Although there is no visible heat stream integration with the DECOMP block due to time constraints associated with the simulation development (the pyrolysis is modelled at 25°C in a pseudo-decomposition block), the heat requirement for pyrolysis can be supplied by the circulating hot solids from the calcination reactor [27, 37]. Once the process has achieved steady state, no external heat is required for the gasification reaction due to the exothermic carbonation (Aspen calculates 709.8 kJ/kg duty for the gasifier and -709.8 kJ/kg for the carbonator at steady stated exchange). The calcination conversion was set to 0.9 for a higher hydrogen yield, and solid CaO, $CaCO_3$, char and ash are separated in a cyclone (modelled as separation block SEP1). The syngas leaves the cyclone as a product stream. The calcination reactor (*RStoic block)* is modelled at atmospheric pressure, maximising CaO conversion in accordance with [38, 39]. Tar production and sulfur effects on sorbent deactivation were not included for simplicity, as it is not possible to model tar deposition in Aspen Plus. The solids that leave the calcination reactor are separated in a cyclone (SEP2) from the flu gas and recirculated into the carbonation reactor (5% is purged). Natural gas is used as a utility to supply energy required for the calcination reactor. A calculator block was added to convert the ultanal analysis to wet-based for determination of the syngas product stream.

It was assumed that:

- All chemical reactions reach equilibrium
- Char is 100% carbon composed
- Negligible tar formation
- 100% heat transfer efficiency where external heat duty is applied
- 75% heat transfer during heat exchange
- 70% carbon efficiency due to particle kinetics not explicitly modelled

- 100% CaO make up
- Stipulated pyrolytic yield
- The blocks are considered implicitly 0 dimensional & thermally isolated
- Each block has perfect mixing and uniform temperature
- Ideal gas behaviour (high temperature, low pressure)

3. Results and Discussion

The aim of this study was the proposal of a high thermal efficiency SEG process with CaO sorbent regeneration to produce high-quality syngas, using air as a gasification agent. A duty of 709.8 kJ/hr was exchanged between the carbonation reactor and the gasification reactor [calculated via Aspen for stream HEAT-1]. The following results display the syngas composition under the reference temperature parameters for integrated gasification-carbonation (650°C), alongside a temperature variation analysis for the integrated carbonator:

Table 3: Output composition with varying temperature [vol% (dry)]

Temp [°C]	650	550	750
Component			
N2	27.75	27.34	28.19
O2	5.07	5.59	4.54
CO2	0.32	0.21	0.44
H2O	3.96	2.79	5.14
H2	20.82	21.83	19.80
CO	24.39	24.35	24.43
N2	27.75	27.34	28.19

Although the discussed benefits of a lowered integrated gasification temperature can be seen between 650°C and 550°C, an increased CO yield is displayed at 750°C. In [28], it is suggested that as the equilibrium point of the endothermic Boudouard equation (Equation 5) occurring during gasification, is 700°C, the formation of CO is promoted at exceeding temperatures.

Equation 5:

$$C + CO_2 + 2CO$$

Performance evaluation in [27] is assessed via the following properties:

- Carbon efficiency (set to 70% in this study as described in the methodology)
- Overall thermal efficiency (not calculated due to time limitations in calculating overall power consumption and efficiency related to air pumps, cyclones, and other equipment)
- Cold gas efficiency (CGE):

Equation 6:

$$\eta_{th} = \frac{LHV_{syngas}.\dot{m}_{syngas}}{LHV_{fuel}.\dot{m}_{fuel} + LHV_{NG}.\dot{m}_{NG}}.100\%$$

In this study, the LHV was calculated in Aspen on a mass basis at 15°C (*RefSYS* correlation), natural gas usage was found from Aspen's calculated equipment costs, and the syngas mass flow rate was taken from the SYN-OUT stream excluding nitrogen and water (See Appendix 1 for input parameters):

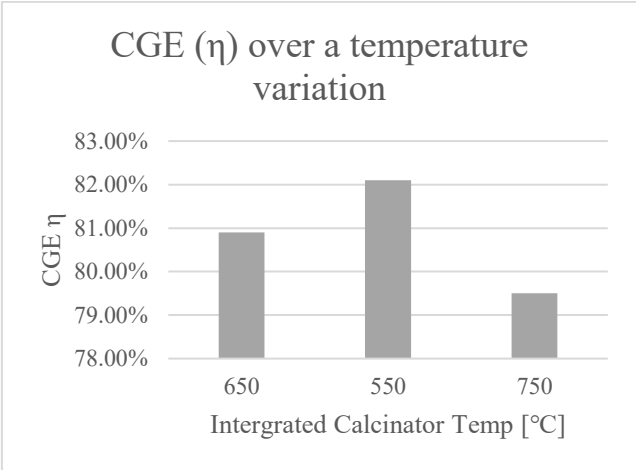

Figure 5: CGE at varying carbonation temperatures

The cold gas efficiency levels for integrated carbonation with CaL looping are congruent with [27, 28, 30] (CaO/Biomass ratio ~5, carbonator T = 650°C without oxygen introduction). The following duty and natural gas usage were reported:

Table 4:Natural Gas Consumption & Utilities (EU-2007/589/EC) at $0.045/kWh

Costing rate	$/hr	2.766865
Mass flow	kg/hr	4.758151
Duty	kJ/hr	221349.2
Heating/Cooling value	kJ/kg	46520
CO2 emission rate	kg/hr	12.41769

N.B.: A large proportion of the natural gas usage and resultant CO_2 emission rate above is attributable to pyrolysis heating for the DECOMP block, although in practise this heat can be provided by the circulating hot solids from the calcination block as in [27]

As proven in each case, the CaL looping component in this study delivers significant benefits to cold gas efficiency, CO_2 emissions reduction, increased syngas quality and hydrogen production. Compared to gasification techniques in simulated on Aspen in [30], this study demonstrated the following gains:

Table 5: Process Improvement Comparisons [30]

Parameter	This Study	No CaO	Autothermal CaO
CO_2	1%	81%	6%
H_2	2%	Negligible	0.46%
CO	39%	16%	25%
CGE	80.9%	56.7%	83.8

The increased CO content compared to no-CaO cases was suggested in [30] and [37] to be correlated to the CaO/Biomass ratio (See Appendix 3), specifically the rising internal gasification temperature due to a larger exothermic carbonation response when more CaO is introduced to the system (when the carbonation system is not equilibrated through a connected heat stream, the exit stream from the gasifier is >1000°C as confirmed by [28]). Additionally, CO_2 partially converts to CO in the 'FLU' stream which increases the syngas quality (See Appendix 2) [40]. The increase in cold-gas efficiency follows the same logic, reflecting more-so the increase in CO/Biomass ratio via accelerated gasification rates from the additional CaO [30]. However, when assessing the CGE achieved by the dual-compartment DFB reactor in this study compared to the autothermal case in [30], the increased oxygen content (due to the air gasification agent as opposed to CO_2), inhibits further CO/biomass ratio effects in congruence with the authors.

The continuous sorption-enhanced steam reforming, and superior mixing efficiency achieved by the DFB configuration successfully achieved further H_2 yield benefits to the autothermal case in [30], with the demonstrated capability for flexible adjustment to either high-purity SNG or H_2 production (utilising posterior methanation or higher carbonation pressures and CaO/biomass) as in [37]. However, engineering multi-compartment fluidised beds such that thermal losses between the lateral surfaces of the compartments are minimised is a complex process, although it has been posited that mitigation strategies employing stagnant air layers could be effective [25]. Further, the CO_2 efficiency gains from utilising air as a gasification agent rather than steam (avoiding heat energy required for steam generation) are in-part negated by the high nitrogen content in the syngas, which dilutes its calorific value and necessitates the inclusion of energy intensive separation units [18, 25, 29, 30]. As such, the experimentally validated schematics illustrated in [27] (figures 6 and 7), represent the most interesting DFB configuration through their use of heat recovery steam generation (the temperature of the calcination effluent stream is such that it can supply the energy for steam

generation, resulting in a low N_2 content and high H_2 content even when not optimised for H_2 production [20-40% vol]) [37]:

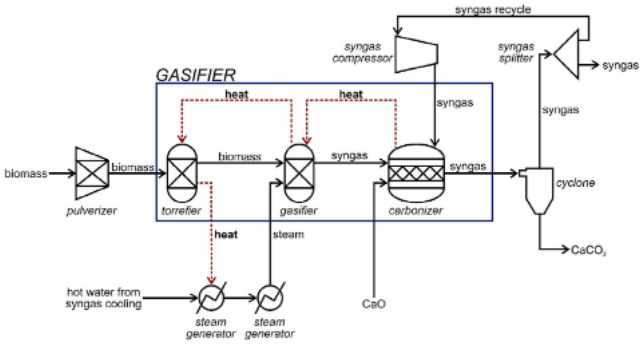

Figure 6: Process flow diagram of the sorption-enhanced gasification reactor [27]

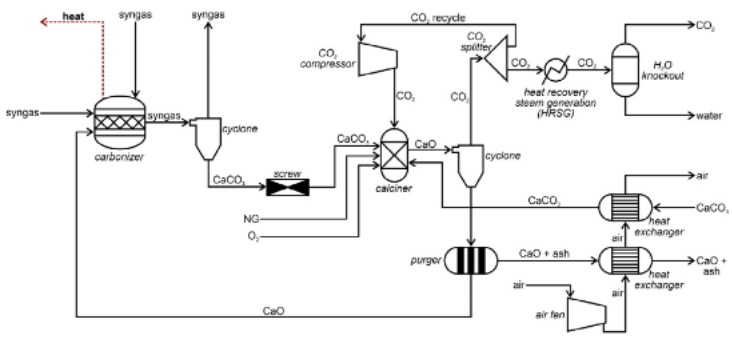

Figure 7: Process flow diagram of calcium looping process [27]

However, incorporating an advanced DFB set-up at low temperatures utilising CO_2 as the gasification agent as in [30] provides a valuable future research endeavour. This technology would enable a low N_2 product formation without the necessity of steam generation and associated process complexities and energy intensive ancillary equipment.

The simplicity of the model provides further constraints regarding the following factors, each of which represent parameters to be optimised in further work:

- CaO makeup – A high CaO make-up assumption implies poorly cycled CaO particles with a CO_2 carrying capacity not close to their residual conversion [37].
- CaO sorbent type – Typically, sorbent doping, or alternative catalytic adsorption routes are considered in biomass gasification [20, 41, 42], while in this study, convention CaL technology was applied for proof-of-concept testing under a time constraint.
- CaO sorbent kinetics – underdeveloped understanding of flu gas interactions with biomass and CaO in the gasification section, consequently underrepresented in the *RGibbs* Aspen block [30]

- Pyrolysis complexity – The pseudo decomposition block does not capture the multi-phase, dynamic pyrolysis section of the integrated carbonation-gasification reactor, specifically in its interaction with the thermochemical equilibrium in the subsequent stages [33, 35, 43-45].
- Tar modelling – The mathematical model efficacy is significantly improved when tar formation is considered [36], while tar deposition was not even an input parameter in this study.
- Heat transfer assumptions – 75% allothermal heat transfer is assumed, as experimental DFB heat transfer rates in this context as not explicitly available, and regardless significantly variable with reactor geometry and operative conditions. As such, pilot scale studies should be considered subsequent to this study, to analyse heat effects under complexity.
- Natural gas usage – Although in [27], natural gas is also utilised in the calcination reactor, a high-purity O_2 stream leads to a negligible natural gas feed content which decreases fossil fuel reliance. In further investigations based on this study, considerations into process configurations that could decrease both natural gas and O_2 reliance in the calcination reactor would be of value. Solutions may include the diversion of some syngas through a methanation reactor to produce SNG as in [27], which could be used as fuel in the calcination reactor. Further, [27] includes H_2O knockout duty, compressors, coolers and pumps in its CGE calculation for a more complete understanding of the sustainability of this process.

4. Conclusions

This study aimed to simulate an applicable solution to 3 challenges facing biomass gasification for syngas production: low energy efficiency, high CO_2 emissions and ash agglomeration. This aim was achieved through the pursuit of the development of a DFB integrated CaL SEG system with CaO regeneration, using air as a gasification agent. The proposed solution provides value to the above challenges as such:

- The production of high-quality syngas (compared to autothermal CaL cases) with enhanced cold gas efficiency, avoiding the need for steam generation or air separation (39% CO and increased H_2 product with 80.9% CGE)
- The avoidance of steam generation or effluent CO_2 utilisation resulted in a negative carbon utilisation system with decreased CO_2 emissions (1% compared to 6% for autothermal CaL cases)

- Low temperature gasification with a high energy efficiency process below the softening spot for ash agglomeration, compounded by CaO catalytic cracking effects for tar reduction.

Recommendations for further work include:

- Pilot-scale demonstrations for proof-of-concept analysis under complexity (including modelling tar deposition, CaO cycling, equilibrium effects in the pyrolysis section, and sorbent-biomass-CO_2 dynamics)
- Integration of ancillary equipment duties and power requirements
- Incorporation of a CO_2 gasification agent concept
- Optimisation of sorbent selection, delivery, and heat transfer processes

5. References

[1] W. Y. Wang, L. W. Fan, and P. Zhou, "Evolution of global fossil fuel trade dependencies," (in English), *Energy,* Article vol. 238, p. 13, Jan 2022, Art no. 121924, doi: 10.1016/j.energy.2021.121924.

[2] J. Blazquez, R. Fuentes, and B. Manzano, "On some economic principles of the energy transition," (in English), *Energy Policy,* Article vol. 147, p. 9, Dec 2020, Art no. 111807, doi: 10.1016/j.enpol.2020.111807.

[3] R. S. Sprick *et al.*, "Tunable Organic Photocatalysts for Visible-Light-Driven Hydrogen Evolution," *Journal of the American Chemical Society,* vol. 137, no. 9, pp. 3265-3270, 2015-03-11 2015, doi: 10.1021/ja511552k.

[4] J. Popp, S. Kovacs, J. Olah, Z. Diveki, and E. Balazs, "Bioeconomy: Biomass and biomass-based energy supply and demand," (in English), *New Biotechnology,* Article vol. 60, pp. 76-84, Jan 2021, doi: 10.1016/j.nbt.2020.10.004.

[5] M. Kardung *et al.*, "Development of the Circular Bioeconomy: Drivers and Indicators," (in English), *Sustainability,* Article vol. 13, no. 1, p. 24, Jan 2021, Art no. 413, doi: 10.3390/su13010413.

[6] E. I. Koytsoumpa, D. Magiri-Skouloudi, S. Karellas, and E. Kakaras, "Bioenergy with carbon capture and utilization: A review on the potential deployment towards a European circular bioeconomy," (in English), *Renewable & Sustainable Energy Reviews,* Review vol. 152, p. 22, Dec 2021, Art no. 111641, doi: 10.1016/j.rser.2021.111641.

[7] W. Dessie *et al.*, "Current advances on waste biomass transformation into value-added products," *Applied Microbiology and Biotechnology,* vol. 104, no. 11, pp. 4757-4770, 2020-06-01 2020, doi: 10.1007/s00253-020-10567-2.

[8] O. Filip, K. Janda, L. Kristoufek, and D. Zilberman, "Food versus fuel: An updated and expanded evidence," (in English), *Energy Economics,* Article vol. 82, pp. 152-166, Aug 2019, doi: 10.1016/j.eneco.2017.10.033.

[9] M. A. Destek, S. A. Sarkodie, and E. F. Asamoah, "Does biomass energy drive environmental sustainability? An SDG perspective for top five biomass consuming countries," (in English), *Biomass & Bioenergy,* Article vol. 149, p. 8, Jun 2021, Art no. 106076, doi: 10.1016/j.biombioe.2021.106076.

[10] S. Magagula, J. Z. Han, X. Y. Liu, and B. C. Sempuga, "Targeting efficient biomass gasification," (in English), *Chinese Journal of Chemical Engineering,* Review vol. 33, pp. 268-278, May 2021, doi: 10.1016/j.cjche.2020.11.027.

[11] N. M. Nguyen, F. Alobaid, P. Dieringer, and B. Epple, "Biomass-Based Chemical Looping Gasification: Overview and Recent Developments," *Applied Sciences,* vol. 11, no. 15, p. 7069, 2021-07-30 2021, doi: 10.3390/app11157069.

[12] C. Gai and Y. Dong, "Experimental study on non-woody biomass gasification in a downdraft gasifier," *International Journal of Hydrogen Energy,* vol. 37, no. 6, pp. 4935-4944, 2012-03-01 2012, doi: 10.1016/j.ijhydene.2011.12.031.

[13] H. C. Yoon, T. Cooper, and A. Steinfeld, "Non-catalytic autothermal gasification of woody biomass," *International Journal of Hydrogen Energy,* vol. 36, no. 13, pp. 7852-7860, 2011-07-01 2011, doi: 10.1016/j.ijhydene.2011.01.138.

[14] J. A. Ruiz, M. C. Juarez, M. P. Morales, P. Munoz, and M. A. Mendivil, "Biomass gasification for electricity generation: Review of current technology barriers," (in English), *Renewable & Sustainable Energy Reviews,* Review vol. 18, pp. 174-183, Feb 2013, doi: 10.1016/j.rser.2012.10.021.

[15] W. Paengjuntuek, J. Boonmak, and J. Mungkalasiri, "Energy Efficiency Analysis in An Integrated Biomass Gasification Fuel Cell System," (in English), *2015 International Conference on Alternative Energy in Developing Countries and Emerging Economies,* Proceedings Paper vol. 79, pp. 430-435, 2015, doi: 10.1016/j.egypro.2015.11.514.

[16] S. Zhang *et al.*, "Hydrogen production from autothermal CO2 gasification of cellulose in a fixed-bed reactor: Influence of thermal compensation from CaO carbonation," *International Journal of Hydrogen Energy,* 2022-02-01 2022, doi: 10.1016/j.ijhydene.2022.02.018.

[17] M. Trninic, A. Jovovic, D. Stojiljkovic, and G. Jankes, "Biomass gasification technology: The state of the art overview," (in English), *Proceedings of the 2016 4th International Symposium on Environmental Friendly Energies and Applications (Efea),* Proceedings Paper p. 8, 2016.

[18] J. Karl and T. Proll, "Steam gasification of biomass in dual fluidized bed gasifiers: A review," (in English), *Renewable & Sustainable Energy Reviews,* Review vol. 98, pp. 64-78, Dec 2018, doi: 10.1016/j.rser.2018.09.010.

[19] P. Basu, "“Biomass Characteristics”," in *Biomass Gasification, Pyrolysis and Torrefaction (Second Edition)*, P. Basu Ed., 2013, ch. Chapter 3, pp. 47-86.

[20] M. Zhao, X. S. Yang, T. L. Church, and A. T. Harris, "Novel CaO-SiO2 Sorbent and Bifunctional Ni/Co-CaO/SiO2 Complex for Selective H-2 Synthesis from Cellulose," (in English), *Environmental Science & Technology,* Article vol. 46, no. 5, pp. 2976-2983, Mar 2012, doi: 10.1021/es300135d.

[21] N. B. Gao, M. Sliz, C. Quan, A. Bieniek, and A. Magdziarz, "Biomass CO2 gasification with CaO looping for syngas production in a fixed-bed reactor," (in English), *Renewable Energy,* Article vol. 167, pp. 652-661, Apr 2021, doi: 10.1016/j.renene.2020.11.134.

[22] J. Fermoso, F. Rubiera, and D. Chen, "Sorption enhanced catalytic steam gasification process: a direct route from lignocellulosic biomass to high purity hydrogen," (in English), *Energy & Environmental Science,* Article vol. 5, no. 4, pp. 6358-6367, Apr 2012, doi: 10.1039/c2ee02593k.

[23] T. Ma *et al.*, "Biomass ash induced agglomeration in fluidized bed. Part 2: Effect of potassium salts in different gas composition," (in English), *Fuel Processing Technology,* Article vol. 180, pp. 130-139, Nov 2018, doi: 10.1016/j.fuproc.2018.08.004.

[24] Q. H. Li, Y. G. Zhang, A. H. Meng, L. Li, and G. X. Li, "Study on ash fusion temperature using original and simulated biomass ashes," (in English), *Fuel Processing Technology,* Article vol. 107, pp. 107-112, Mar 2013, doi: 10.1016/j.fuproc.2012.08.012.

[25] A. Leclerc and F. Larachi, "Allothermal Fluidized Bed Reactor for Steam Gasification of Biomass," (in English), *Instrumentation Science & Technology,* Article vol. 43, no. 4, pp. 390-428, Jul 2015, doi: 10.1080/10739149.2015.1010090.

[26] C. Ortiz, J. M. Valverde, R. Chacartegui, L. A. Perez-Maqueda, and P. Gimenez-Gavarrell, "Scaling-up the Calcium-Looping Process for CO2 Capture and Energy Storage," (in English), *Kona Powder and Particle Journal,* Review no. 38, pp. 189-208, 2021, doi: 10.14356/kona.2021005.

[27] D. Zalec, D. P. Hanak, M. Moze, and I. Golobic, "Process development and performance assessment of flexible calcium looping biomass gasification for production of renewable gas with adjustable composition," (in English), *International Journal of Energy Research,* Article; Early Access p. 19, doi: 10.1002/er.7558.

[28] S. M. Zhang, N. B. Gao, C. Quan, F. C. Wang, and C. F. Wu, "Autothermal CaO looping biomass gasification to increase process energy efficiency and reduce ash sintering," (in English), *Fuel,* Article vol. 277, p. 7, Oct 2020, Art no. 118199, doi: 10.1016/j.fuel.2020.118199.

[29] K. Goransson, U. Soderlind, and W. Zhang, "Experimental test on a novel dual fluidised bed biomass gasifier for synthetic fuel production," (in English), *Fuel,* Article vol. 90, no. 4, pp. 1340-1349, Apr 2011, doi: 10.1016/j.fuel.2010.12.035.

[30] H. M. Sun and C. F. Wu, "Autothermal CaO Looping Biomass Gasification for Renewable Syngas Production," (in English), *Environmental Science & Technology,* Article vol. 53, no. 15, pp. 9298-9305, Aug 2019, doi: 10.1021/acs.est.9b01527.

[31] E. R. Widjaya, G. N. Chen, L. Bowtell, and C. Hills, "Gasification of non-woody biomass: A literature review," (in English), *Renewable & Sustainable Energy Reviews,* Review vol. 89, pp. 184-193, Jun 2018, doi: 10.1016/j.rser.2018.03.023.

[32] G. Pulina *et al.*, "Animal board invited review - Beef for future: technologies for a sustainable and profitable beef industry," (in English), *Animal,* Review vol. 15, no. 11, p. 15, Nov 2021, Art no. 100358, doi: 10.1016/j.animal.2021.100358.

[33] A. M. Salem, I. N. Zaini, M. C. Paul, and W. H. Yang, "The evolution and formation of tar species in a downdraft gasifier: Numerical modelling and experimental validation," (in English), *Biomass & Bioenergy,* Article vol. 130, p. 12, Nov 2019, Art no. 105377, doi: 10.1016/j.biombioe.2019.105377.

[34] H. Dafiqurrohman, D. Kosasih, A. W. N. Putra, M. I. B. Setyawan, and A. Surjosatyo, "Improvement of Tar Removal Performance in Biomass Gasification Using Fixed-Bed Biomass Filtration," (in English), *Journal of Engineering and Technological Sciences,* Article vol. 52, no. 4, pp. 546-564, 2020, doi: 10.5614/j.eng.technol.sci.2020.52.4.7.

[35] E. B. Machin *et al.*, "Tar reduction in downdraft biomass gasifier using a primary method," (in English), *Renewable Energy,* Article vol. 78, pp. 478-483, Jun 2015, doi: 10.1016/j.renene.2014.12.069.

[36] A. Gagliano, F. Nocera, M. Bruno, and G. Cardillo, "Development of an equilibrium-based model of gasification of biomass by Aspen Plus," (in English), *8th International Conference on Sustainability in Energy and Buildings, Seb-16,* Proceedings Paper vol. 111, pp. 1010-1019, 2017, doi: 10.1016/j.egypro.2017.03.264.

[37] I. Martinez and M. C. Romano, "Flexible sorption enhanced gasification (SEG) of biomass for the production of synthetic natural gas (SNG) and liquid biofuels: Process assessment of stand-alone and power-to-gas plant schemes for SNG production," (in English), *Energy,* Article vol. 113, pp. 615-630, Oct 2016, doi: 10.1016/j.energy.2016.07.026.

[38] T. Kohl *et al.*, "Comparison of energy efficiency assessment process methods: Case Bio-SNG process," (in English), *Energy,* Article; Proceedings Paper vol. 74, pp. 88-98, Sep 2014, doi: 10.1016/j.energy.2014.03.107.

[39] P. Haro, F. Johnsson, and H. Thunman, "Improved syngas processing for enhanced Bio-SNG production: A techno-economic assessment," (in English), *Energy,* Article vol. 101, pp. 380-389, Apr 2016, doi: 10.1016/j.energy.2016.02.037.

[40] Y. Guo *et al.*, "Low-Temperature CO2 Methanation over CeO2-Supported Ru Single Atoms, Nanoclusters, and Nanoparticles Competitively Tuned by Strong Metal-Support Interactions and H-Spillover Effect," (in English), *Acs Catalysis,* Article vol. 8, no. 7, pp. 6203-6215, Jul 2018, doi: 10.1021/acscatal.7b04469.

[41] P. D. Dissanayake *et al.*, "Biochar-based adsorbents for carbon dioxide capture: A critical review," (in English), *Renewable & Sustainable Energy Reviews,* Review vol. 119, p. 14, Mar 2020, Art no. 109582, doi: 10.1016/j.rser.2019.109582.

[42] A. Sharma, J. Jindal, A. Mittal, K. Kumari, S. Maken, and N. Kumar, "Carbon materials as CO2 adsorbents: a review," (in English), *Environmental Chemistry Letters,* Review vol. 19, no. 2, pp. 875-910, Apr 2021, doi: 10.1007/s10311-020-01153-z.

[43] X. J. Xing, Z. K. Sun, P. Y. Ma, J. Yu, and Z. B. Wu, "Establishment of three components of biomass pyrolysis yield model," in *12th International Conference on Combustion and Energy Utilisation (ICCEU)*, Lancaster, ENGLAND, Sep 29-Oct 03 2014, vol. 66, AMSTERDAM: Elsevier Science Bv, in Energy Procedia, 2015, pp. 293-296, doi: 10.1016/j.egypro.2015.02.061. [Online]. Available: <Go to ISI>://WOS:000360761400074

[44] D. Humbird, A. Trendewicz, R. Braun, and A. Dutta, "One-Dimensional Biomass Fast Pyrolysis Model with Reaction Kinetics Integrated in an Aspen Plus Biorefinery Process Model," (in English), *Acs Sustainable Chemistry & Engineering,* Article vol. 5, no. 3, pp. 2463-2470, Mar 2017, doi: 10.1021/acssuschemeng.6b02809.

[45] C. Wang, G. Y. Chen, W. C. Ma, X. L. Zhu, and Y. Wang, "Process Simulation on Fluidized Bed Pyrolysis of Biomass," in *International Conference on Energy, Environment and Sustainable Development (ICEESD 2011)*, Shanghai Univ Elect Power, Shanghai, PEOPLES R CHINA, Oct 21-23 2011, vol. 356-360, STAFA-ZURICH: Trans Tech Publications Ltd, in Advanced Materials Research, 2012, pp. 2265-2269, doi: 10.4028/www.scientific.net/AMR.356-360.2265. [Online]. Available: <Go to ISI>://WOS:000302888301091

6. Appendixes

Appendix 1

Table 6: Cold gas efficiency inputs

Temp [°C]	LHV syngas [kJ/kg]	Mass flow syngas [kg/hr]	LHV biomass [kg/kg]	Mass flow biomass [kg/hr]	LHV natural gas [kg/kg]	Mass flow natural gas [kg/hr]
650	16526	18.575	10537	10	46520	4.71
550	16819.53	18.48	10526.67	10	46520	4.75
750	16207.04	18.63	10526.67	10	46520	4.77

Appendix 2

Table 7: FLU Component Molar Yields

Component	Mole Fraction
N2	0
O2	0
CO2	0.246961
H2O	0.246961
H2	0.259117
CO	0.246961

Appendix 3

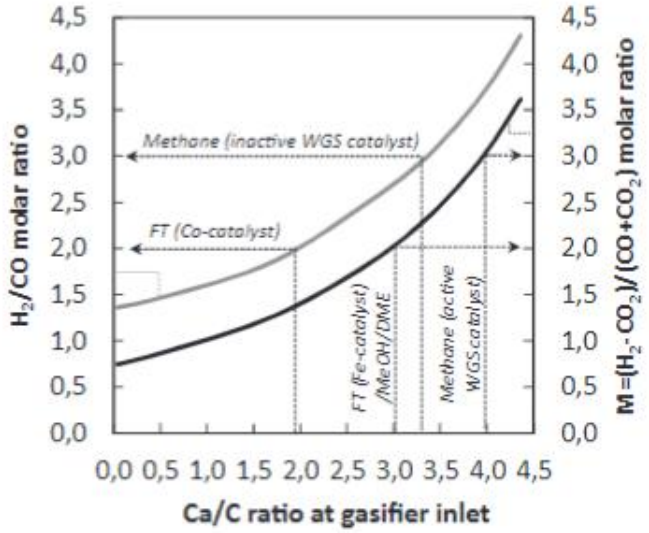

Figure 8: CaO/Biomass ratio effects on H2/CO ratio [37]