Table of Contents	
2	Block Diagram
3	Notes
4	Main PWR
5	PMIC
6	iMX6 Power
7	iMX6 Control, Pwr-On Rst, JTAG
8	DDR3
9	NOR Flash, Boot Select
10	NAND Flash, MLB, SD-MMC, CAN
11	USB
12	HDMI, SATA
13	Mini PCIE
14	Ethernet
15	LVDS Displays
16	Parallel Display, MIPI
17	I2C I/O Expanders
18	Steering logic
19	Debug UART, LED, Test Points
20	Card Edge Fingers
21	Contingency Ckt
22	Rev History

MX6 Dual Lite
SABRE AI CPU Card

Revision A

See Revision History sheet for version

MX6 Quad CPU Card

Schematic SCH-27142
Part No. MCIMX6QAICPU1

MX6 DualLite CPU Card

Schematic SCH-27767
Part No. MCIMX6DLAICPU1

Automotive Base Board

Schematic SCH-26662
Part No. MCIMXABASEV1

1. Unless Otherwise Specified:
   All resistors are in ohms, 5%, 1/8 Watt.
   All capacitors are in uF, 20%, 50V.
   All voltages are DC.
   All polarized capacitors are aluminum electrolytic.

2. Interrupted lines coded with the same letter or letter combinations are electrically connected.

3. Device type number is for reference only. The number varies with the manufacturer.

4. Special signal usage:
   _B Denotes - Active-Low Signal
   <> or [] Denotes - Vectored Signals
   () or {} Denotes - Extra Notes to be considered.

5. Interpret diagram in accordance with American National Standards Institute specifications, current revision, with the exception of logic block symbology.

Consumer devices are utilized in this design when lead time for equivalent automotive-grade devices conflicted with production schedules.
Freescale suggests consulting component suppliers for equivalent automotive-grade device information.

freescale

Multimedia Application Division,
Wireless & Mobile System Group

This document contains information proprietary to Freescale Semiconductor and shall not be used for engineering design, procurement or manufacture in whole or in part without the express written permission of Freescale Semiconductor.

ICAP Classification: FCP: FIUO: PUBI: X

Designer: David	Drawing Title: MCIMX6DLAICPU1		
Drawn by: David	Page Title: Cover & Revision History		
Approved: David	Size C	Document Number SCH-27767 PDF: SPF-27767	Rev A
	Date: Friday, February 15, 2013	Sheet 1 of 22	

Block Diagram

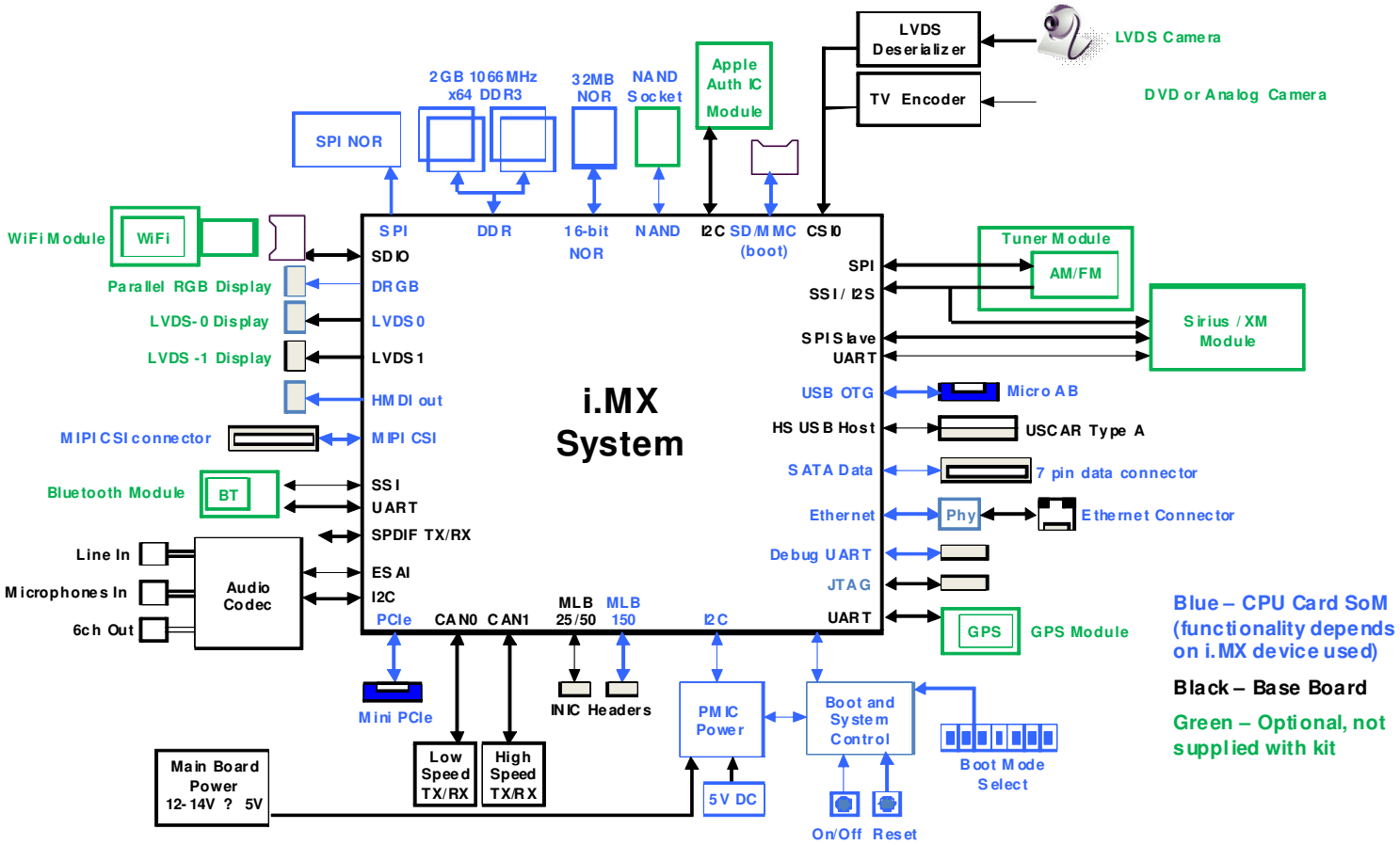

freescale

ICAP Classification: FCP: ___ FIUO: PUBI: X

Drawing Title: MCIMX6DLAICPU1

Page Title: Block Diagram

Size	Document Number	Rev
C	SCH-27767 PDF: SPF-27767	A

Date: Monday, November 12, 2012 Sheet 2 of 22

I2C2 - 50 kbps Max Bus Speed
I2C2_SDA = KEY_ROW3
I2C2_SCL = EIM_EB2

Peripheral	Location	Speed (kbps)	8-Bit Write Addresses	Default Write Address
PMIC	CPU Card	400	0x10 to 0x1E	0x10
iPOD	Base Board	50	0x20	0x20
Terrestrial Radio AM-FM	Base Board	400	0xC0, 0xC2, 0xC4, 0xC6	0xC6
ESAI Audio CODEC	Base Board	100	0x90, 0x92, 0x94, 0x96	0x90
LVDS0 Capacitive Touch	CPU Card	100	0x82	0x82
HDMI EDID	CPU Card option	100	0xA0	Option not installed
MIPI ADI Video Card	CPU Card	400	0x40, 0x42	0x42

I2C3 - 400 kbps Max Bus Speed
I2C3_SDA = EIM_D18
I2C3_SCL = GPIO_3

Peripheral	Location	Speed (kbps)	8-Bit Write Addresses	Default Write Address
MOST (MLB)	CPU, Base Board option	400	0x40	0x40
Port Expander A	CPU Card	400	56 combinations	0x60
Port Expander B	CPU Card	400	56 combinations	0x64
Port Expander C	CPU Card	400	56 combinations	0x68
Analog In via Video ADC	Base Board	400	0x40, 0x42	0x42
Ambient Light Sensor	Base Board	400	0x88	0x88
Compass	Base Board	400	0x1C	0x1C
Accelerometer	Base Board	400	0x3A, 0x38	0x38
RGB LCD Resistive Touch	CPU Card option	3400	0x90	Option not installed

Boot Configuration Table (See switch interconnection on sheet 9).
Refer to sheet 7 for the two Boot Mode switches.

Boot mode	BT_CFG1_								BT_CFG2_								BT_CFG3_								BT_CFG4_							
Switch >>>	S2_4	S2_3	S2_2	S2_1	S1_10	S1_9		S1_8	S1_7	S1_6		S1_5	S1_4	S1_3	S1_2	S1_1																
	7	6	5	4	3	2	1	0	7	6	5	4	3	2	1	0	7	6	5	4	3	2	1	0	7	6	5	4	3	2	1	0
NAND 64 Gb	1	x	0	*	0	0	1	0	x	x	x	0	1	0	0	0	0	0	0	0	0	0	0	0	x	x	x	x	x	x	x	x
NAND 16 Gb	1	x	0	*	0	0	1	0	x	x	x	0	1	0	0	0	0	0	0	0	0	0	0	0	x	x	x	x	x	x	x	x
NOR	0	0	0	0	0	x	x	x	0	1	x	x	x	x	x	x	0	0	0	0	0	0	0	0	x	x	x	x	x	x	x	x
SD_CPU	0	1	0	*	*	*	x	*	*	*	1	1	0	x	x**	*	0	0	0	0	0	0	0	0	x	x	x	x	x	x	x	x
MMC_CPU	0	1	1	*	*	x	x	x	*	*	1	1	0	*	*	*	0	0	0	0	0	0	0	0	x	x	x	x	x	x	x	x
SATA HDD	0	0	1	0	x	x	x	x	x	x	x	*	*	*	*	*	0	0	0	0	0	0	0	0	x	x	x	x	x	x	x	x
SPI_NOR	0	0	1	1	x	x	x	x	x	x	x	x	x	x	x	x	0	0	0	0	0	0	0	0	x	x	0	1	1	0	0	0

CPU Card Identification for Software
MX6 fuses OCOTP_GP1[15:8]
SABRE-AI rev C = 0x14

Note: SD/MMC limited to USDHC-3 and 4-bit bus width only

Legend:

1 - Pin needs to be connected to high level

0 - Pin needs to be connected to low level

x - Don't care

* - Switch needs to be configured high or low depending on application. Check reference manual for boot configuration options.

** BT_CFG2[1] is 0 for SD and 1 for SDXC.

SD Speed = CFG1[3:2]
00 = SDR25 (high)
01 = SDR12 (normal)
10 = SDR50
11 = SDR104

freescale

ICAP Classification: FCP: [redacted] PUBI: X

Drawing Title: MCIMX6DLAICPU1

Page Title: Notes

Size C | Document Number SCH-27767 PDF: SPF-27767 | Rev A

Date: Friday, February 15, 2013 | Sheet 3 of 22

Main Power

When CPU Card is run standalone, all power is sourced from P5V0 (Q505 pad 5).

5 Vdc +/-5%
1 to 4 A typical
4.6 A estimated maximum

IMPORTANT!
No fuse protection.
Use current-limited supply.

(From card edge finger)
Pg20 MAINBOARD_SENSE_B

Symbol Q502 & Q505:
Base on the datasheet, FDMS6681Z is a 8-pin package with an extra thermal pad on the bottom.
Pin 5 in the symbol represents all the Drain pins including the thermal pad because they are connected together.

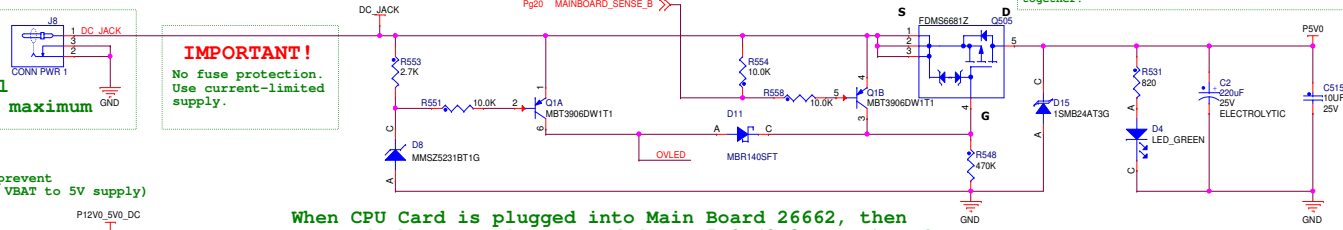

When CPU Card is plugged into Main Board 26662, then part of the power is sourced from P5V0 (2.3 A max) and part is supplied by VBAT (approx 1 A max) to avoid overloading the 5-V regulator on 26662.

(Diode-OR to prevent backfeed from VBAT to 5V supply)

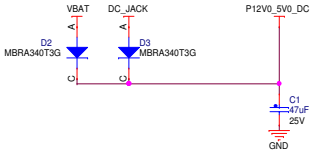

5 Vdc OVERVOLTAGE INDICATOR

This LED will illuminate when the DC adapter input voltage exceeds 5.6V

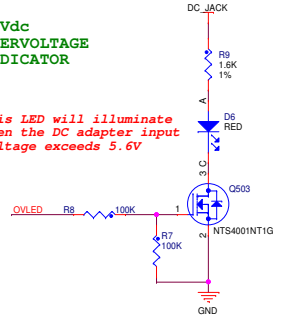

PMIC Power Feed 3.5 A max

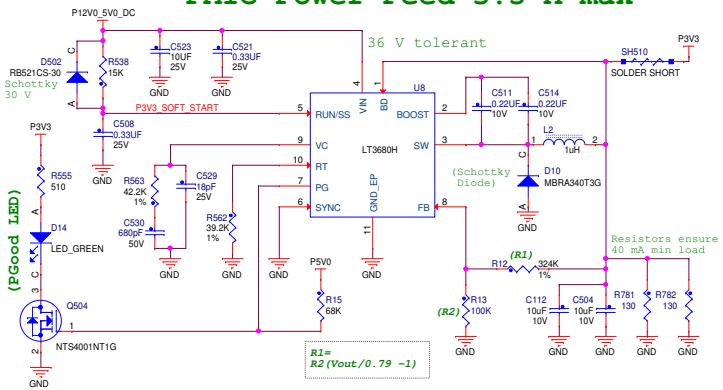

Peripheral Power Supply 3.5 A max

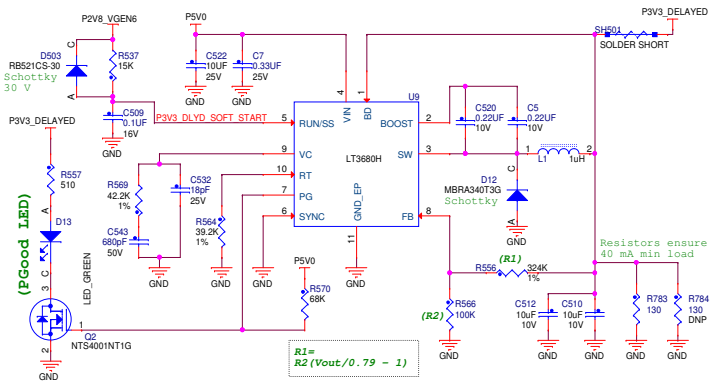

5 V delay FET

(P2V5_VGEN5 closes these switches when ON)

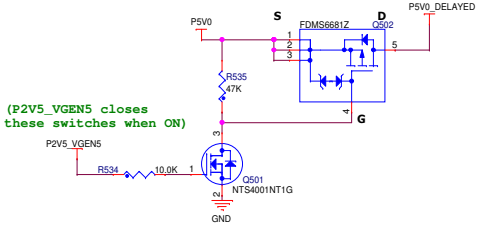

P3V3 and P3V3_DELAYED voltage is actually 3.35 V nominal for compatibilty with Main Board 26662. For customer production product, Freescale recommends R1 = 317k 1% for 3.3 V nominal.

Backup Power Supply for Real-Time Clock

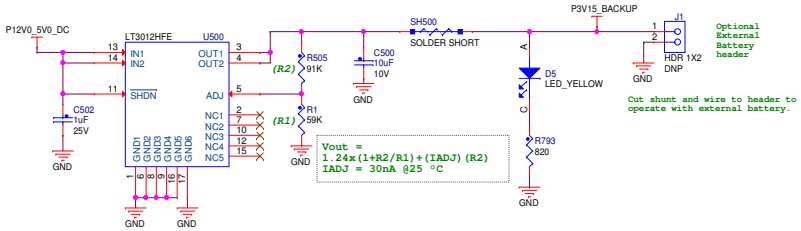

3.15V @ 250mA max

freescale

ICAP Classification:	FCP: ___	FIUO:	PUBI: X
Drawing Title:	MCIMX6DLAICPU1		
Page Title:	Main PWR		
Size C	Document Number SCH-27767 PDF: SPF-27767		Rev A
Date: Monday, November 12, 2012		Sheet 4 of 22	

PMIC

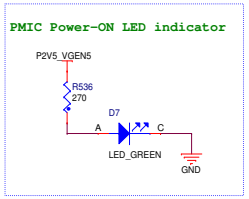

With low-inductive paths between VIN the voltage sources, either 0.22 uF or 0.47 uF may be used.

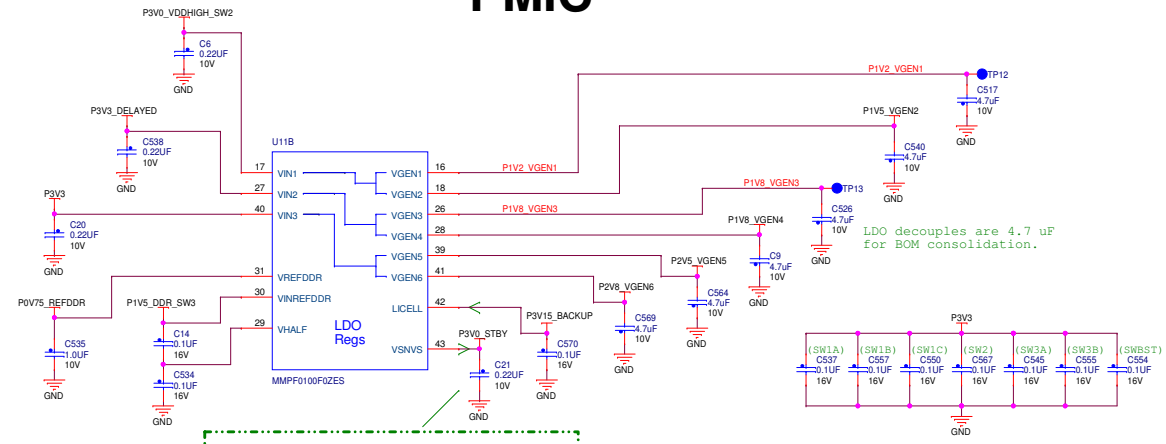

BOM Deviation - Change C21 from 0.22 uF to 0.47 uF to comply with PMIC data sheet.

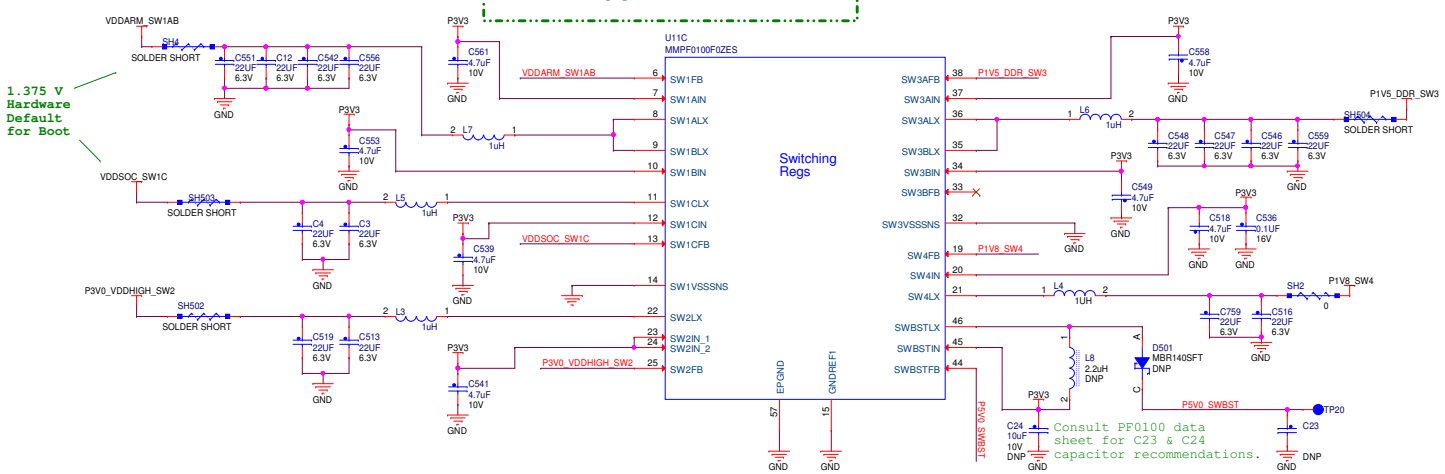

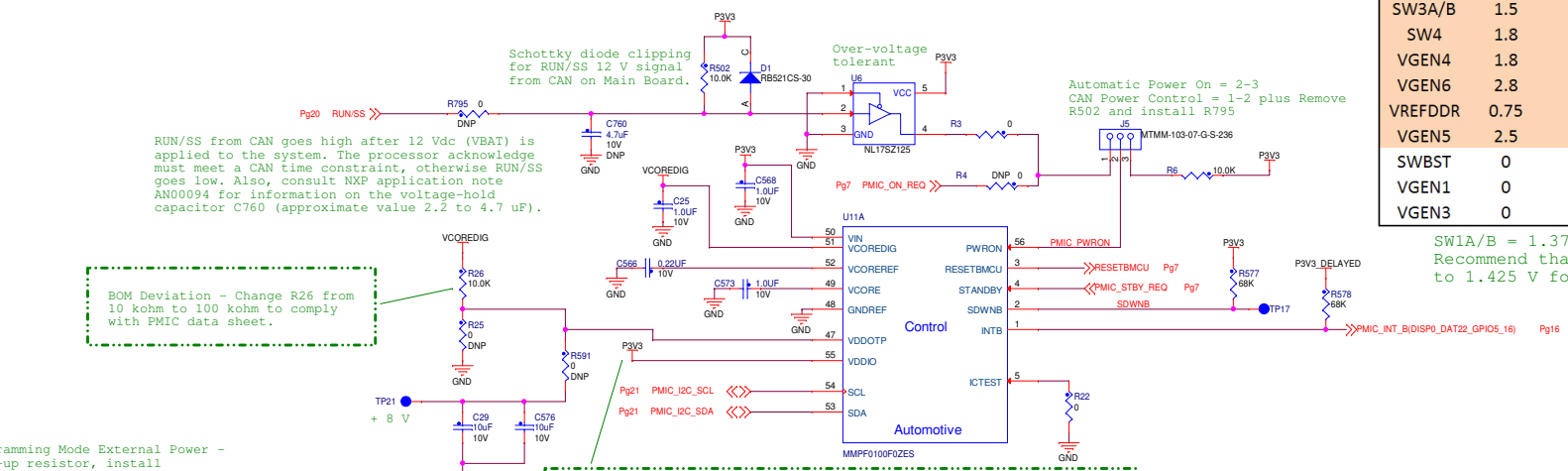

Peripheral Power Rails

Voltage (V)	Rail Name	Block	Power Source	Generated By	Current Capability (A)
12	VBAT	MLB	Wall Supply	MB	5.5
5	P5V0_DELAYED	Para LCD	Main Power	MB or Jack	
		LVDS LCD			
		HDMI			
		MIPI			
	P5V0_OTG_VBUS	USB			0.5
	P5V0_H1_VBUS	USB	switcher	CPU	0.8
3.3	P3V3_DELAYED	NAND Flash	switcher	LT3680	3.5
		SD Card			
		NOR Flash			
		HDMI			
		LVDS LCD			
		Ethernet			
		UART			
		MIPI			
		Mini PCIE			
		MLB (MOST)			
3.0	P3V0_VDD_USB	USB	VDDUSB_CAP	iMX	-
2.8	P2V8_VGEN6	MIPI	VGEN6	PMIC	0.2
1.8	P1V8_SW4	MIPI	SW4	PMIC	1.0
	P1V8_VGEN4	SD Card	VGEN4	PMIC	0.35
1.5	P1V5_DDR_SW3	DDR	SW3A/B	PMIC	2.5
	P1V5_VGEN2	Mini PCIE	VGEN2	PMIC	0.25
1.5	ETH_VDDIO_REG	Ethernet	PHY - on-chip	AR8031	-
0.75	P0V75_REFDDR	DDR	VREFDDR	PMIC	0.01

MB = Main board 26662

PMIC Output Rails

Regulator	Voltage (V)	Power-Up Sequence	Load
VSNVS	3	0	VDD_SNVS_IN
SW1A/B	1.375	1	VDDARM_IN
SW1C	1.375	1	VDDSOC_IN
SW2	3	2	VDDHIGH_IN
VGEN2	1.5	2	mini PCIE connector
SW3A/B	1.5	3	NVCC_DRAM, NVCC_RGMII (option)
SW4	1.8	3	MIPI connector
VGEN4	1.8	3	NVCC_SD3
VGEN6	2.8	3	3V3_DELAYED enable, MIPI conn
VREFDDR	0.75	3	DRAM_VREF
VGEN5	2.5	3	Pwr LED & 5V0_DELAYED enable
SWBST	0	N/A	Not used
VGEN1	0	N/A	Not used
VGEN3	0	N/A	Not used

SW1A/B = 1.375 V for boot-up at ~800 MHz. Recommend that software increase SW1A/B to 1.425 V for 1 GHz operation.

freescale

ICAP Classification: FCP: ___ FIUO: PUBI: X

Drawing Title: MCIMX6DLAICPU1

Page Title: PMIC

Size C | Document Number SCH-27767 PDF: SPF-27767 | Rev A

Date: Friday, February 15, 2013 | Sheet 5 of 22

MX6 Power

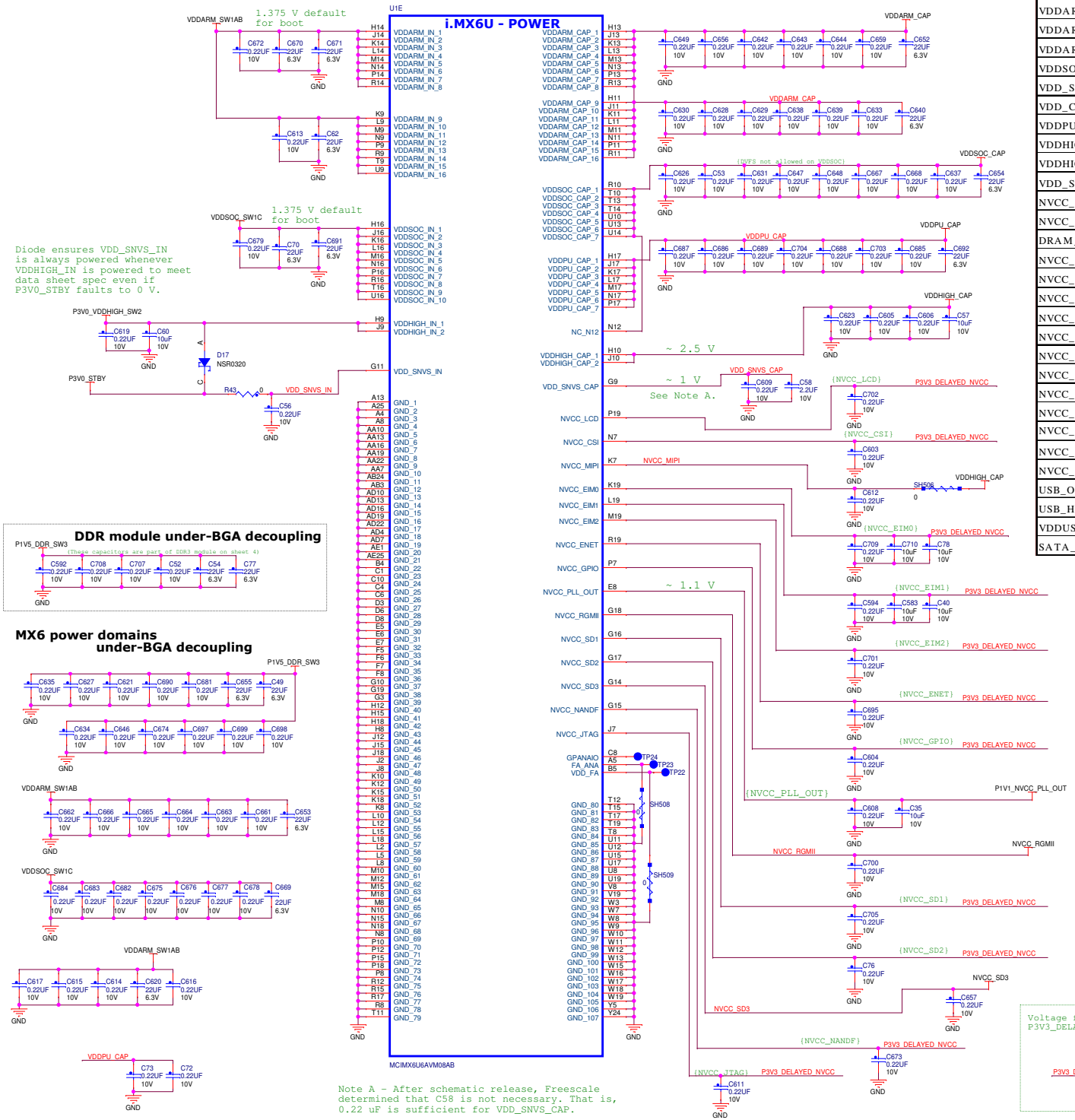

Supply Rail	Global Net	Regulator	Voltage (V)	Source
VDDARM_IN	P1V325_VDDARM_SW1AB	SW1A/B	1.375*	PMIC
VDDARM23_IN				
VDDARM_CAP	P1V2_VDDARM_CAP	Note 1	(1.2)	i.MX
VDDARM23_CAP				
VDDSOC_IN	P1V325_VDDSOC_SW1C	SW1C	1.375*	PMIC
VDD_SOC_CAP	P1V1_VDDSOC_CAP	Note 1	(1.1)	i.MX
VDD_CACHE				
VDDPU_CAP	P1V2_VDDPU_CAP	Note 1	(1.2)	i.MX
VDDHIGH_IN	P3V0_VDDHIGH_SW2	SW2	3.0	PMIC
VDDHIGH_CAP	P2V5_VDDHIGH_CAP	Note 1	(2.5)	i.MX
VDD_SNVS_IN	P3V0_STBY	VSNVS	3.0	PMIC
NVCC_RGMII	P1V5_DDR_SW3	SW3	1.5	PMIC
NVCC_DRAM				
DRAM_VREF	P0V75_REFDDR	VREFDDR	0.75	PMIC
NVCC_CSI	P3V3_DELAYED	VOUT1	3.3	LT3680
NVCC_EIM0, 1, 2				
NVCC_ENET				
NVCC_GPIO				
NVCC_LCD				
NVCC_NANDF				
NVCC_SD1, 2				
NVCC_SD3				
NVCC_JTAG				
NVCC_PLL_OUT	P1V1_NVCC_PLL_OUT	Note 1	1.1	i.MX
NVCC_MIPI	P2V5_VDDHIGH_CAP	VDDHIGH_CAP	2.5	i.MX
NVCC_LVDS2P5	P2V5_VDDHIGH_CAP	VDDHIGH_CAP	2.5	i.MX
USB_OTG_VBUS	USB_OTG_VBUS	MIC2005	5.0	Main Jack
USB_H1_VBUS	USB_H1_VBUS	5V	5.0	CPU 5 V
VDDUSB_CAP	VDDUSB	Note 1	(3.0)	i.MX
SATA_VP	P1V1_VDDSOC_CAP	VDDSOC_CAP	1.1	i.MX

* Software should increase to 1.425 V for 1 GHz operation.
Note 1: i.MX6 on-chip regulators.

freescale

ICAP Classification: FCP: ___ FIUO: PUBI: X

Drawing Title: MCIMX6DLAICPU1

Page Title: iMX6 Power

Size	Document Number	Rev
C	SCH-27767 PDF: SPF-27767	A

Date: Friday, February 15, 2013 Sheet 6 of 22

MX6 Control

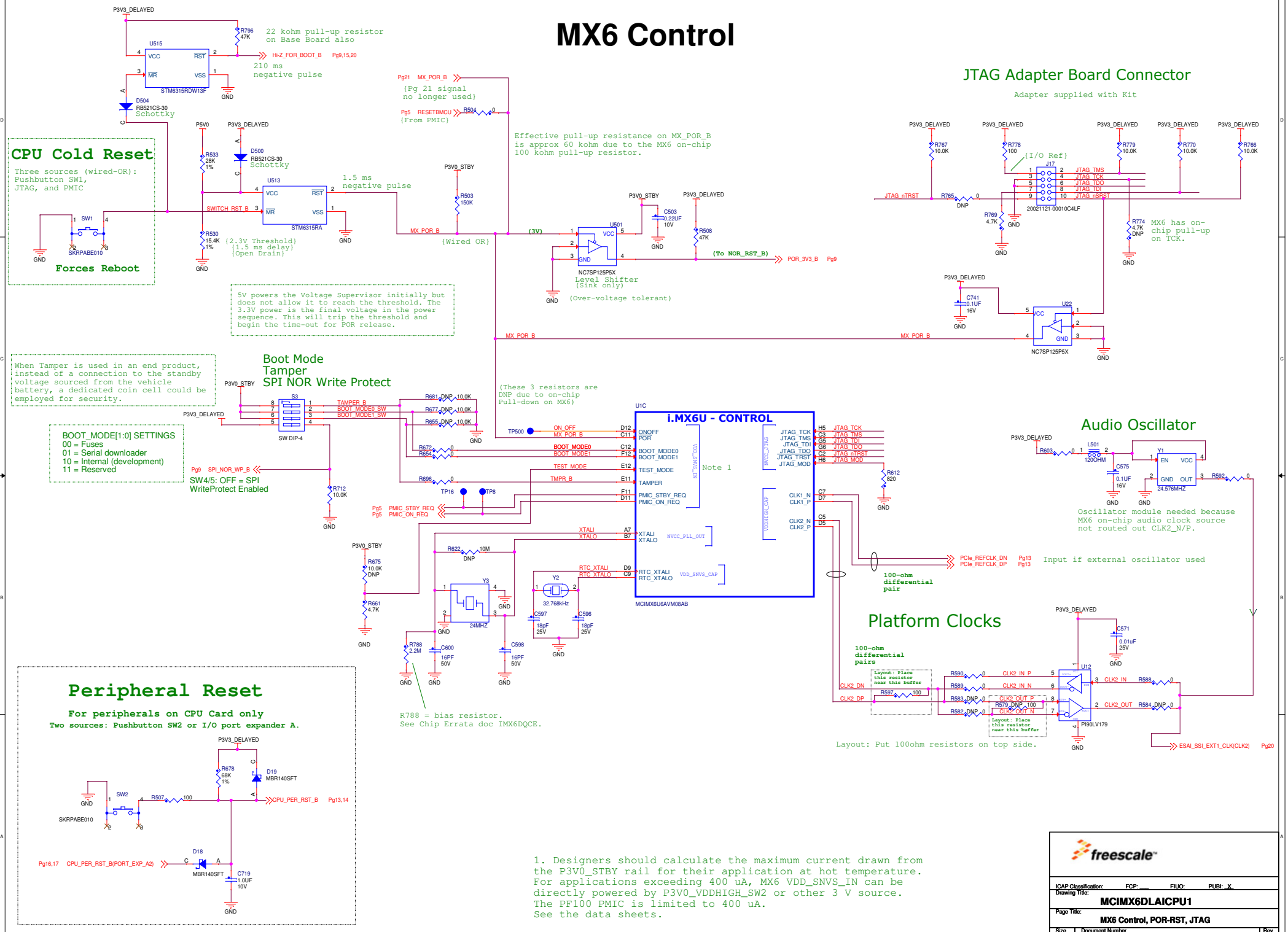

1. Designers should calculate the maximum current drawn from the P3V0_STBY rail for their application at hot temperature. For applications exceeding 400 uA, MX6 VDD_SNVS_IN can be directly powered by P3V0_VDDHIGH_SW2 or other 3 V source. The PF100 PMIC is limited to 400 uA. See the data sheets.

freescale

ICAP Classification:	FCP: ___ FIUO: PUBI: X
Drawing Title:	MCIMX6DLAICPU1
Page Title:	MX6 Control, POR-RST, JTAG
Size C	Document Number SCH-27767 PDF: SPF-27767 Rev A
Date: Monday, November 12, 2012	Sheet 7 of 22

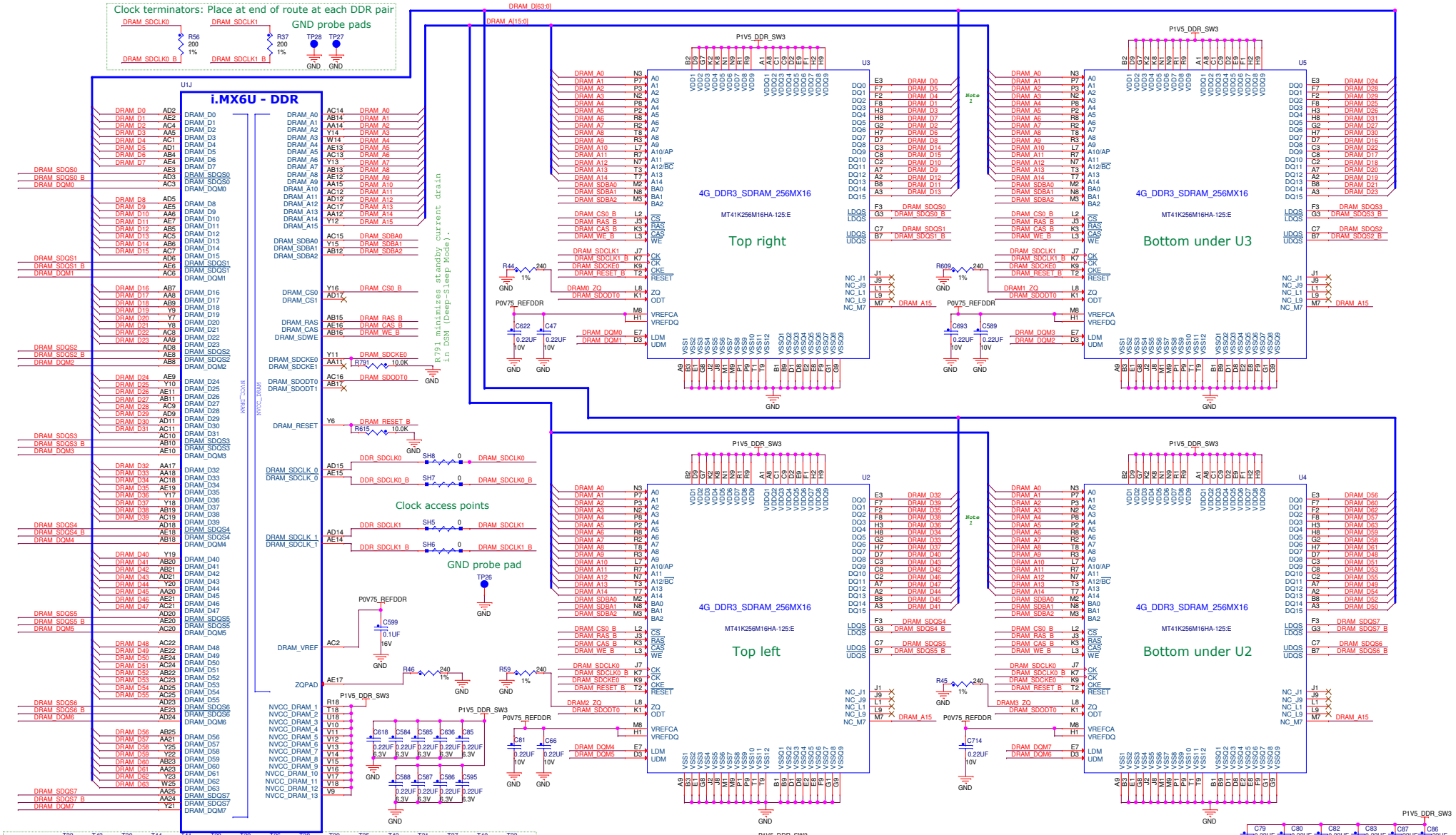

NOTE 1:

Using bit swapping for DATA bus to allow easy pcb routing.

When using data bit swapping the low order bit of each byte must reside at bit 0 of the byte. The remaining 7 data bits can be swapped freely. This restriction is for write leveling calibration.
Example D0 to D0 or D0 to D8, and D1-7 can be swapped.

When swapping byte lanes on 16-bit memories, remember to move the DQMx, DQSx, and DQSx_B signals for that byte lane.

This design utilizes a consumer device. Freescale suggests consulting the supplier for the equivalent automotive-grade device information.

freescale

ICAP Classification:	FCP: ___	FIUO:	PUBI: _X_
Drawing Title:	MCIMX6DLAICPU1		
Page Title:	2 GByte Total (256M x 16-bit each) DDR3		
Size C	Document Number SCH-27767 PDF: SPF-27767		Rev A
Date: Monday, November 12, 2012		Sheet 8 of 22	

Parallel & Serial NOR FLASH, BOOT Select

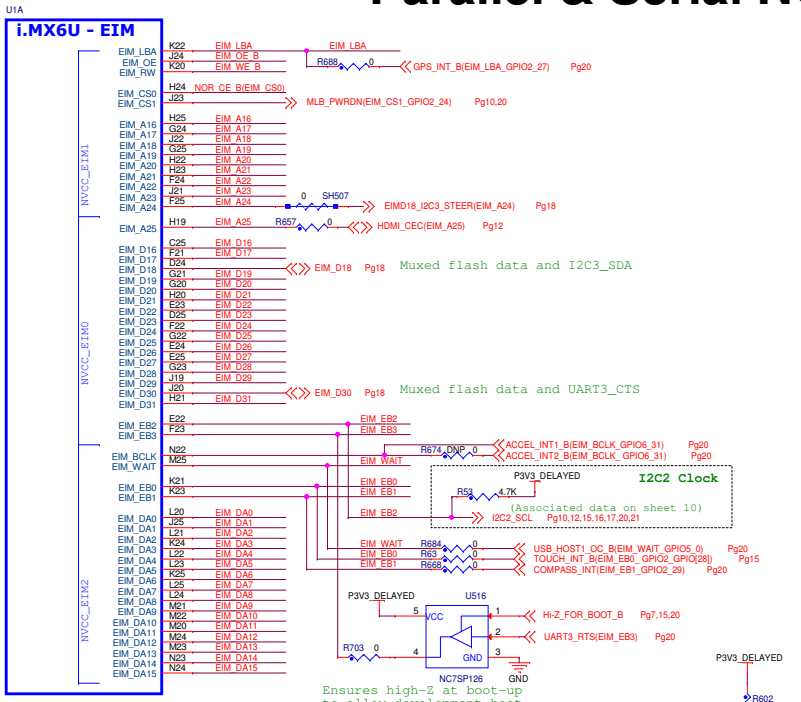

32 MB Parallel NOR Flash

NOR Flash is bottom boot-block uniform (32Kword).
NOR Flash is sized for bootloaders, kernel images, and/or nonvolatile configuration/data storage.

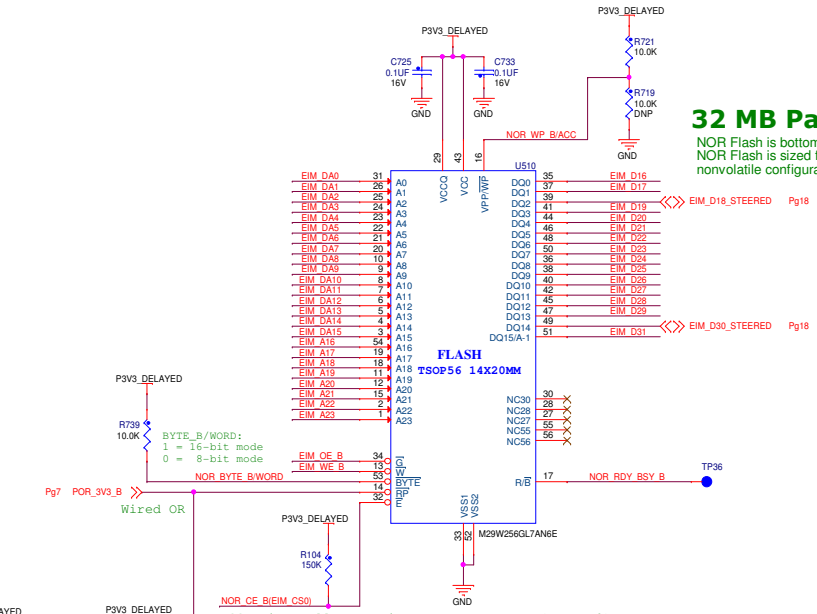

Boot Configuration Select

Switch mapping with the configuration options is described on the Notes page of the schematics.

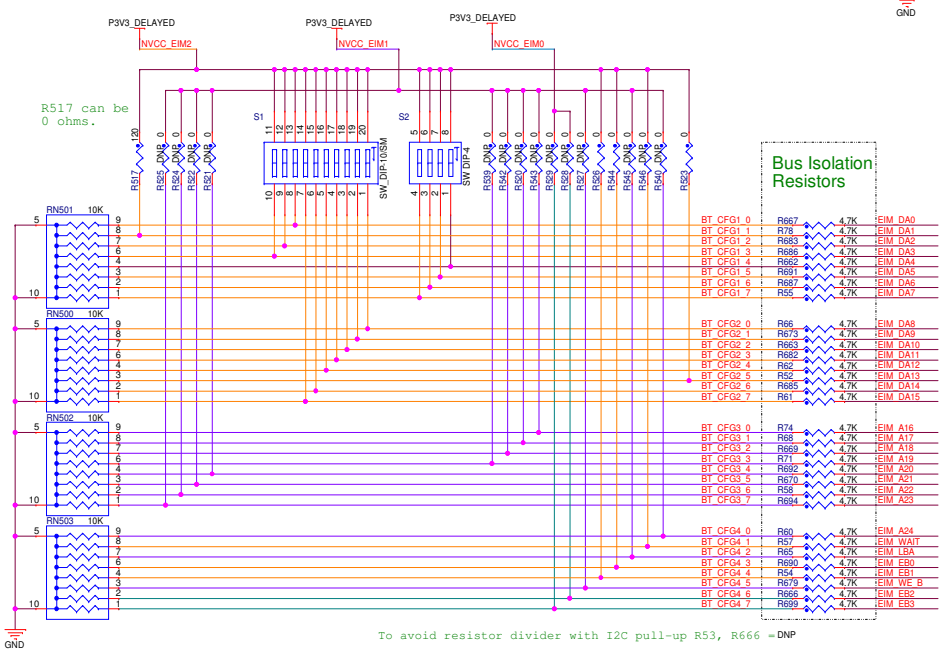

4 MB SPI NOR Flash

Kernal and/or Boot Loader Storage

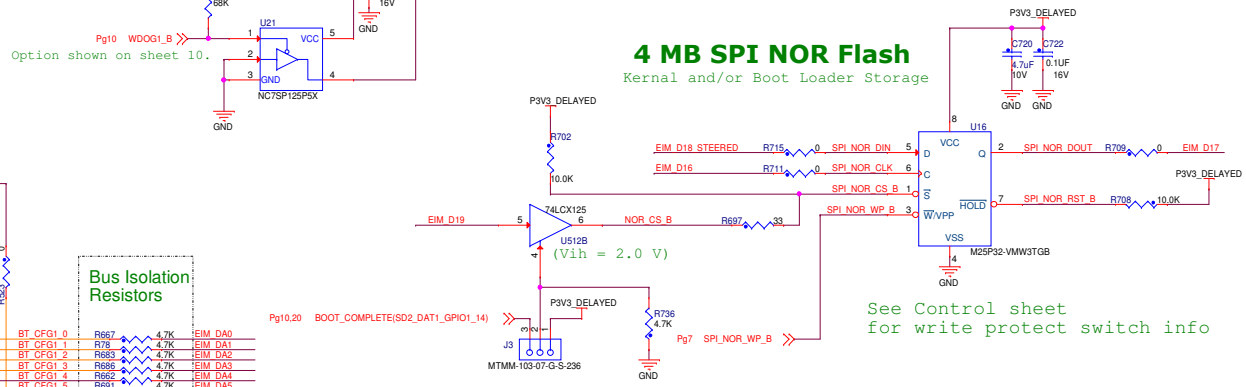

Jumper Boot Selection
1 - 2 Do not boot from SPI NOR (default)
2 - 3 Boot from SPI NOR

If SPI NOR is not utilized, BOOT_COMPLETE can be used as a GPIO on either the CPU Card or Main board by installing the jumper 1 - 2 and wiring to jumper pin 3. The signal is also routed to a card edge finger.

To allow SPI NOR boot when plugged into Base Board 26662:
Base Board rev B: Remove R193 on Base Board
Base Board rev E: No changes

freescale

ICAP Classification:	FCP: ___ FIUO: PUBI: X
Drawing Title:	MCIMX6DLAICPU1
Page Title:	NOR FLASH, BOOT_SEL
Size C	Document Number SCH-27767 PDF: SPF-27767 Rev A
Date: Monday, November 12, 2012	Sheet 9 of 22

NAND FLASH, MLB, SD-MMC, CAN

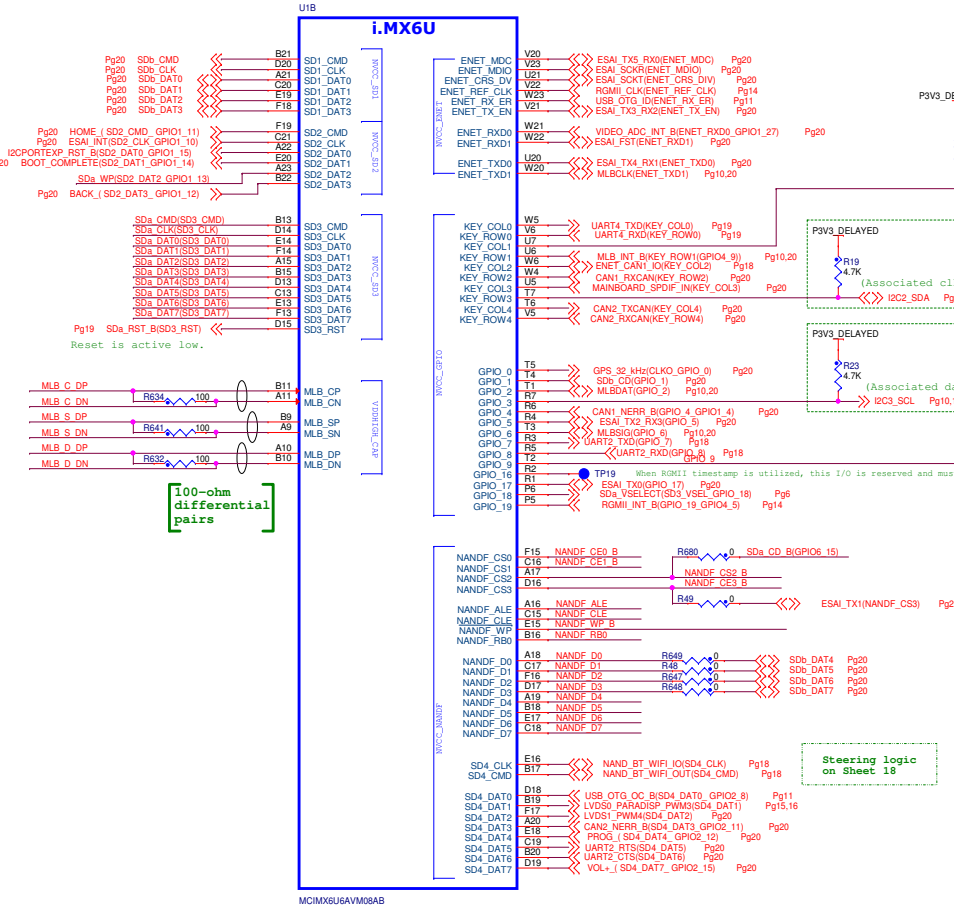

NAND Flash Socket
(TSOP48)

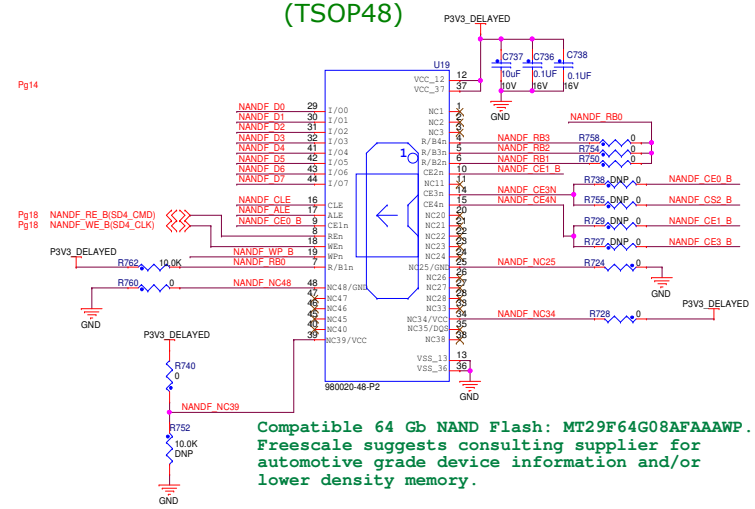

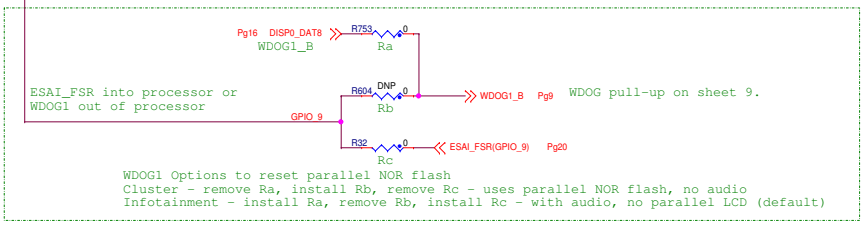

MLB (MOST) Connector

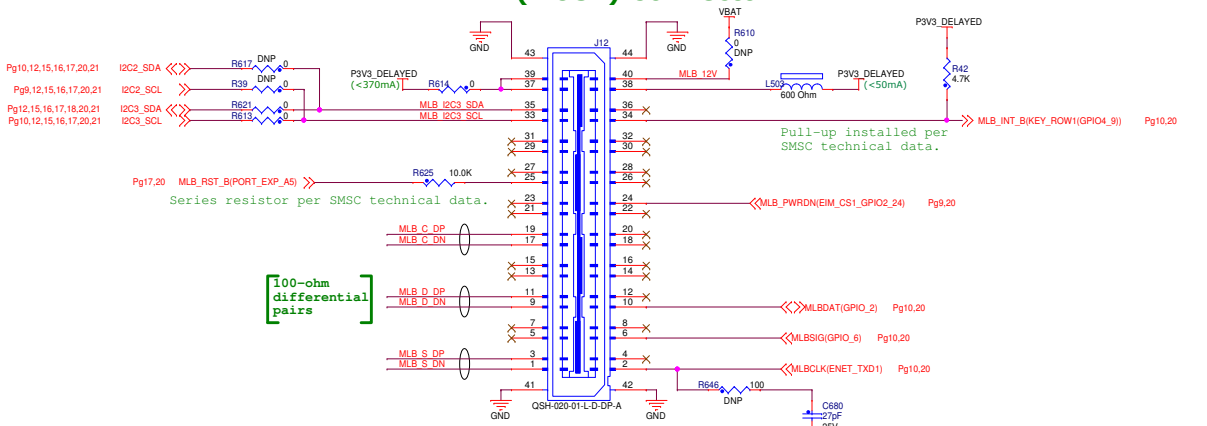

SD USH-1 & MMC

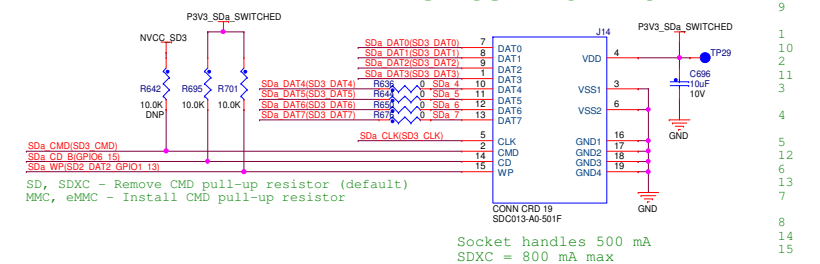

freescale

ICAP Classification:	FCP: ___ FIUO: PUBI: X
Drawing Title:	MCIMX6DLAICPU1
Page Title:	NAND FLASH, SD-MMC, MLB
Size C	Document Number SCH-27767 PDF: SPF-27767 Rev A
Date: Monday, November 12, 2012	Sheet 10 of 22

USB OTG/ HOST

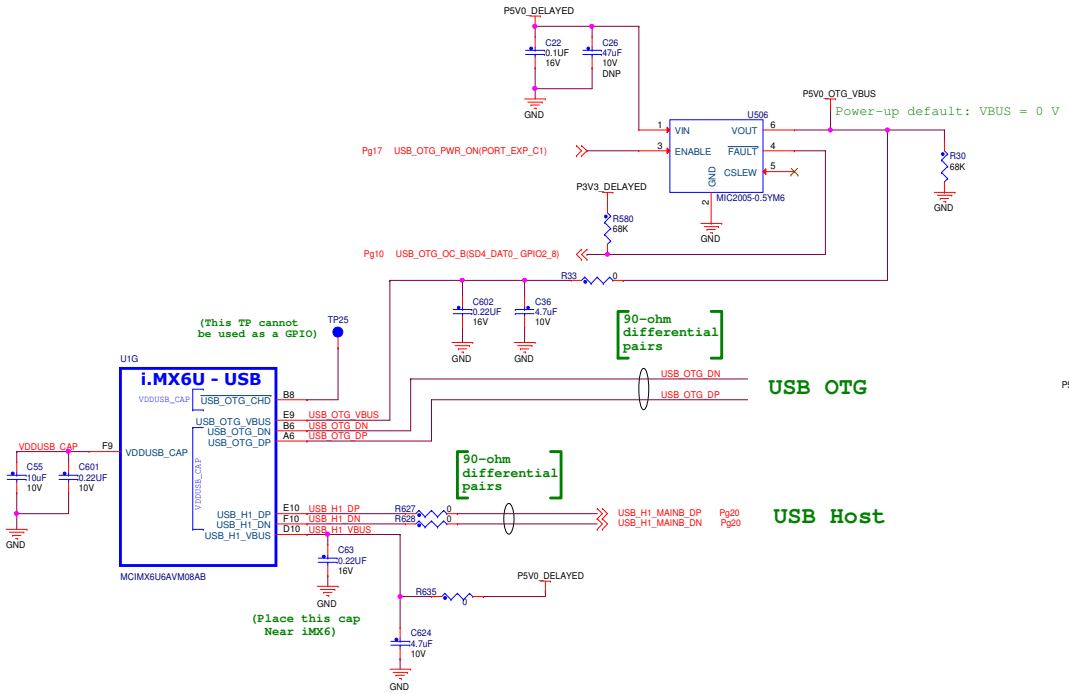

USB OTG

Standard A connector is not installed and is for Freescale internal use only for USB compliance testing.

Micro connector fits inside the footprint of the A connector.
Route Dm & Dp signals from A connector to micro_AB. No branches.
The AB connector is bottom mount connector on the top side to aid differential routing between AB and Standard A connectors.

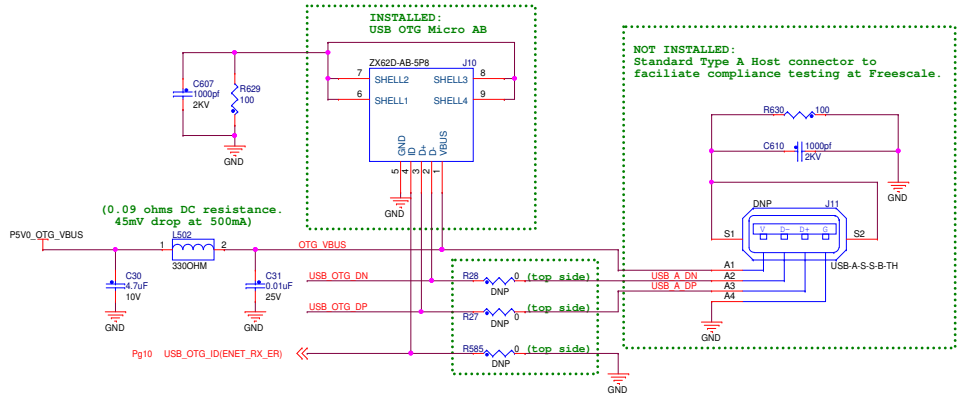

Type A Receptacle Note:
Resistors Installed = Host Mode
Resistors Uninstalled = Device Mode

Caution:
Place tape or insulator over resistors to prevent shorting to metal USB A connector shell.

ESD Protection

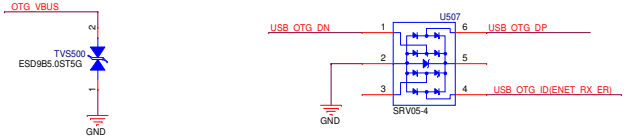

USB_OTG_ID could cause backfeed through U507 when P3V3_DELAYED is not powered up.
Therefore, pin 5 is not connected to a postive supply.

freescale

ICAP Classification: FCP: ___ FIUO: PUBI: X

Drawing Title: **MCIMX6DLAICPU1**

Page Title: **USB**

Size	Document Number	Rev
C	SCH-27767 PDF: SPF-27767	A

Date: Monday, November 12, 2012 Sheet 11 of 22

HDMI

HDMI for demonstration and prototyping; not used in vehicle.

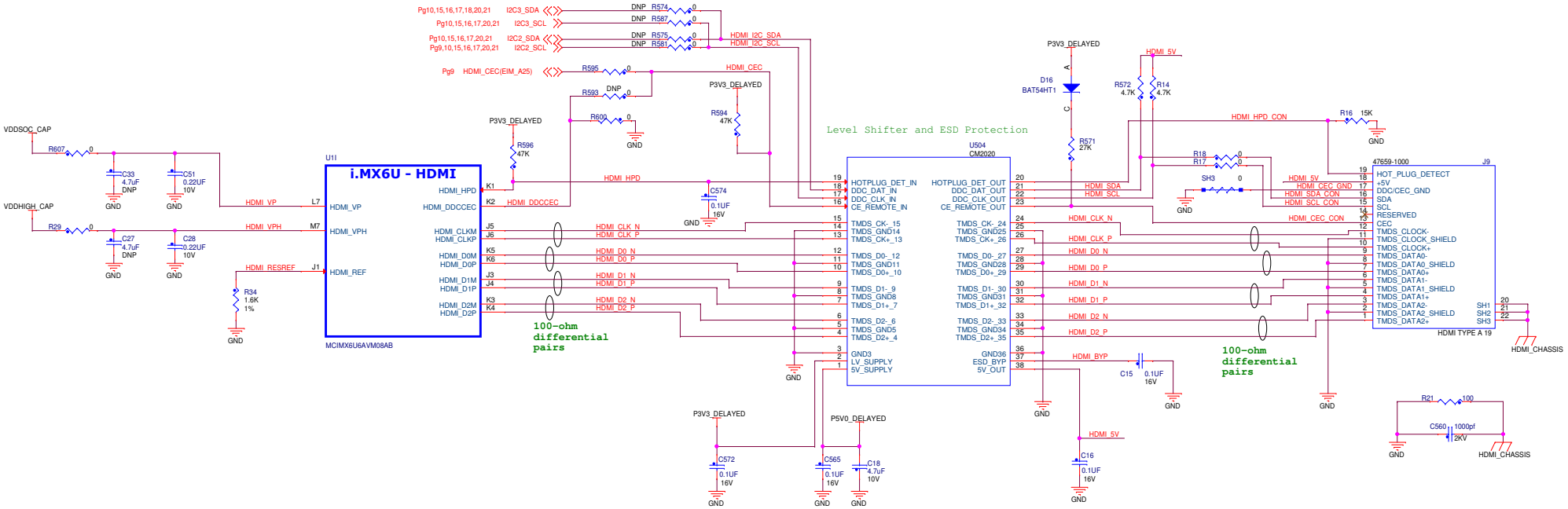

SATA

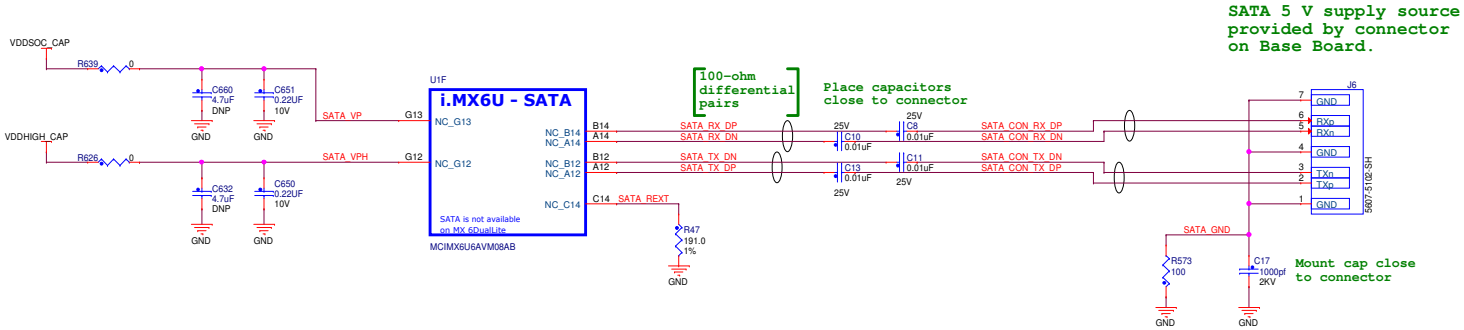

freescale

ICAP Classification:	FCP: ___ FIUO: PUBI: X
Drawing Title:	MCIMX6DLAICPU1
Page Title:	HDMI, SATA
Size C	Document Number SCH-27767 PDF: SPF-27767 Rev A
Date: Monday, November 12, 2012	Sheet 12 of 22

Mini PCIE Connector

PCIe provided to support USB3.0.
Circuit board passed PCIe 2.5G compliance test.

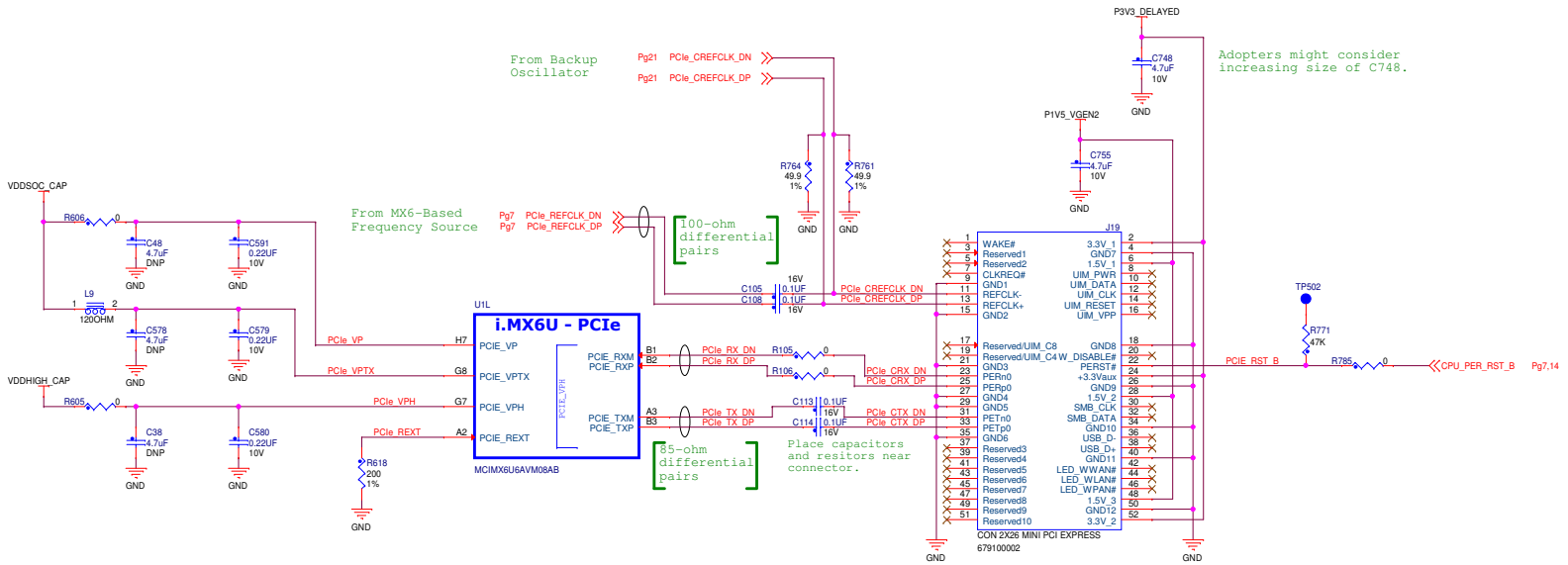

Layout considerations

TX pairs are usually routed on top layer

Length/skew compensation (trace serpentines) are not required for this Bus

Please remove ref plane under edgefinger pads

Use wide pair-to-pair spacing (At least 5H TX vs TX and RX vs RX use at least 7H for RX vs RX

freescale

ICAP Classification: FCP: ___ FIUO: PUBI: _X_

Drawing Title: **MCIMX6DLAICPU1**

Page Title: **Mini PCI Express**

Size	Document Number	Rev
C	SCH-27767 PDF: SPF-27767	A

Date: Friday, February 15, 2013 Sheet 13 of 22

Ethernet

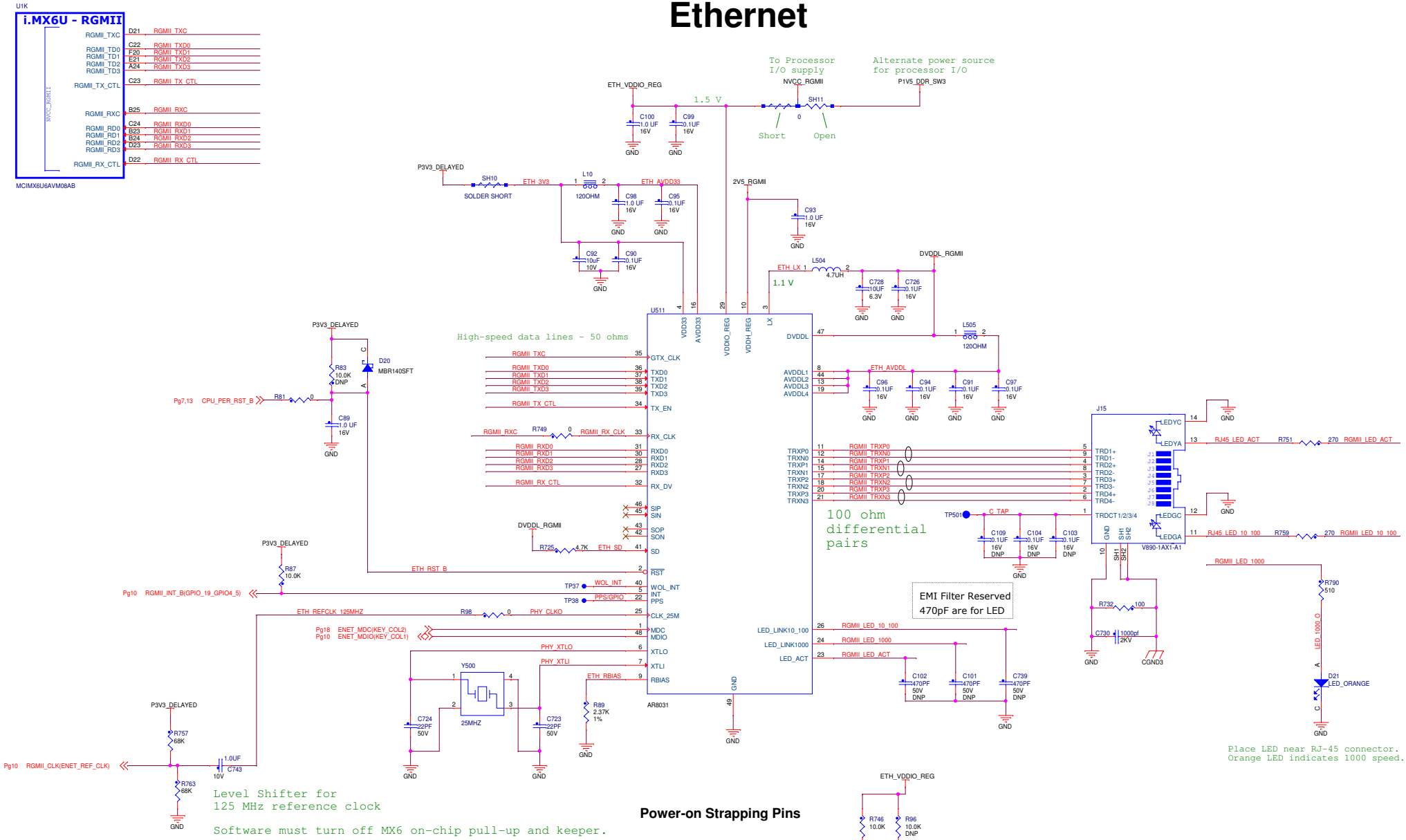
U1K
i.MX6U - RGMII
MCIMX6U6AVM08AB
RGMII_TXC D21 RGMII_TXC
RGMII_TD0 C22 RGMII_TXD0
RGMII_TD1 F20 RGMII_TXD1
RGMII_TD2 E21 RGMII_TXD2
RGMII_TD3 A24 RGMII_TXD3
RGMII_TX_CTL C23 RGMII_TX_CTL
RGMII_RXC B25 RGMII_RXC
RGMII_RD0 C24 RGMII_RXD0
RGMII_RD1 B23 RGMII_RXD1
RGMII_RD2 B24 RGMII_RXD2
RGMII_RD3 D23 RGMII_RXD3
RGMII_RX_CTL D22 RGMII_RX_CTL
To Processor I/O supply
Alternate power source for processor I/O
NVCC_RGMII
P1V5_DDR_SW3
SH11
Short
Open
ETH_VDDIO_REG
1.5 V
C100 1.0 UF 16V
C99 0.1UF 16V
P3V3_DELAYED
SH10
SOLDER SHORT
ETH_3V3
L10
120OHM
ETH_AVDD33
C98 1.0 UF 16V
C95 0.1UF 16V
C92 10uF 10V
C90 0.1UF 16V
2V5_RGMII
C93 1.0 UF 16V
DVDDL_RGMII
ETH_LX_1
L504
4.7UH
1.1 V
C728 10UF 6.3V
C726 0.1UF 16V
U511
VDD33
AVDD33
VDDIO_REG
VDDH_REG
LX
DVDDL
L505
120OHM
High-speed data lines - 50 ohms
GTX_CLK
TXD0
TXD1
TXD2
TXD3
TX_EN
RX_CLK
RXD0
RXD1
RXD2
RXD3
RX_DV
SIP
SIN
SOP
SON
SD
RST
WOL_INT
INT
PPS
CLK_25M
MDC
MDIO
XTLO
XTLI
RBIAS
AR8031
AVDDL1
AVDDL2
AVDDL3
AVDDL4
ETH_AVDDL
C96 0.1UF 16V
C94 0.1UF 16V
C91 0.1UF 16V
C97 0.1UF 16V
TRXP0
TRXN0
TRXP1
TRXN1
TRXP2
TRXN2
TRXP3
TRXN3
RGMII_TRXP0
RGMII_TRXN0
RGMII_TRXP1
RGMII_TRXN1
RGMII_TRXP2
RGMII_TRXN2
RGMII_TRXP3
RGMII_TRXN3
100 ohm differential pairs
TP501
C_TAP
C109 0.1UF 16V DNP
C104 0.1UF 16V DNP
C103 0.1UF 16V DNP
J15
LEDYC
LEDYA
LEDGC
LEDGA
TRD1+
TRD1-
TRD2+
TRD2-
TRD3+
TRD3-
TRD4+
TRD4-
TRDCT1/2/3/4
V890-1AX1-A1
RJ45_LED_ACT
R751 270 RGMII_LED_ACT
RJ45_LED_10_100
R759 270 RGMII_LED_10_100
RGMII_LED_1000
R790 510
D21 LED_ORANGE
Place LED near RJ-45 connector.
Orange LED indicates 1000 speed.
EMI Filter Reserved
470pF are for LED
R732 100
C730 1000pf 2KV
CGND3
LED_LINK10_100
LED_LINK1000
LED_ACT
C102 470PF 50V DNP
C101 470PF 50V DNP
C739 470PF 50V DNP
D20 MBR140SFT
R83 10.0K DNP
Pg7,13 CPU_PER_RST_B
R81 0
C89 1.0 UF 16V
RGMII_RXC
R749 0
RGMII_RX_CLK
DVDDL_RGMII
R725 4.7K
ETH_SD
ETH_RST_B
R87 10.0K
Pg10 RGMII_INT_B(GPIO_19_GPIO4_5)
TP37
WOL_INT
TP38
PPS/GPIO
ETH_REFCLK 125MHZ
R98 0
PHY_CLKO
Pg18 ENET_MDC(KEY_COL2)
Pg10 ENET_MDIO(KEY_COL1)
PHY_XTLO
PHY_XTLI
ETH_RBIAS
Y500
25MHZ
C724 22PF 50V
C723 22PF 50V
R89 2.37K 1%
P3V3_DELAYED
R757 68K
Pg10 RGMII_CLK(ENET_REF_CLK)
1.0UF 10V C743
R763 68K
Level Shifter for
125 MHz reference clock
Software must turn off MX6 on-chip pull-up and keeper.
Power-on Strapping Pins
ETH_VDDIO_REG
R746 10.0K
R96 10.0K DNP
Addr = 1
PHYADDRESS0 RGMII_RXD0 R97 DNP 10.0K
PHYADDRESS1 RGMII_RXD1 R745 10.0K
MODE2[1] RGMII_RXD2 R744 10.0K
MODE2[3] RGMII_RXD3 R743 10.0K
MODE2[2] RGMII_RXC R748 10.0K
MODE2[0] RGMII_RX_CTL R747 10.0K
SEL_GPIO_INT RGMII_LED_1000 R742 10.0K
ANA_MOD RGMII_LED_ACT R741 10.0K
2V5_RGMII
R94 10.0K DNP
R95 10.0K DNP
MODE2[3:0]
(Default assemble: 0000)
1100 BaseT, RMII1;
1101 BaseT, RMII2;
1110 100X, RGMII, 75OHMS;
1111 100X, TRANS, 75OHMS;
0000 BaseT, RGMII;
0001 BaseT, SGMII;
0010 1000X, RGMII, 50OHMS;
0011 1000X, RGMII, 75OHMS;
0100 1000X, TRANS, 50OHMS;
0101 1000X, TRANS, 75OHMS;
0110 100X, RGMII, 50OHMS;
0111 100X, TRANS, 50OHMS;
Others Reserved
This design utilizes a consumer device. Freescale suggests consulting the supplier for the equivalent automotive-grade device information.
freescale
ICAP Classification: FCP: ___ FIUO: PUBI: X
Drawing Title: MCIMX6DLAICPU1
Page Title: Ethernet
Size C
Document Number SCH-27767 PDF: SPF-27767
Rev A
Date: Monday, November 12, 2012
Sheet 14 of 22

LVDS Displays

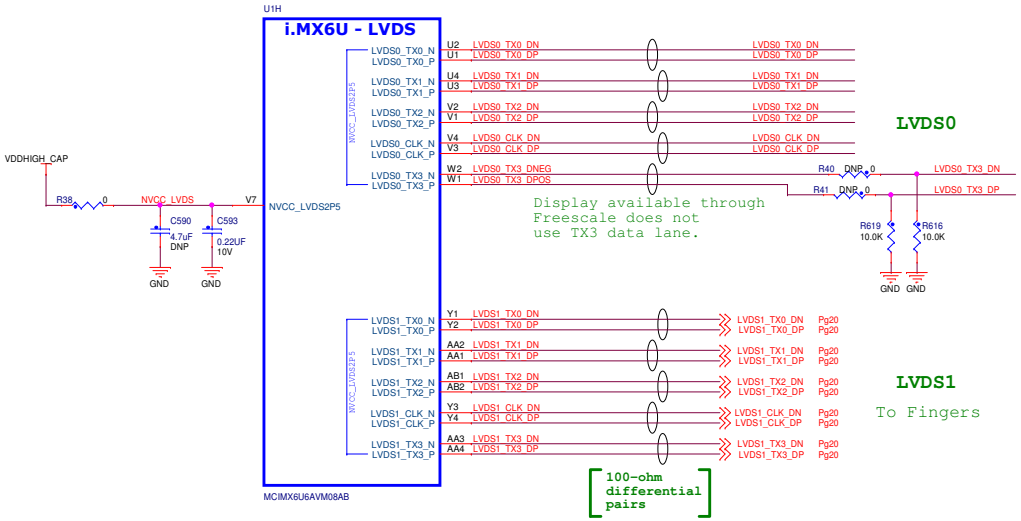

NVCC_LVDS2P5 also powers on-chip DDR I/O predrivers, and must be powered whether LVDS is used or not.

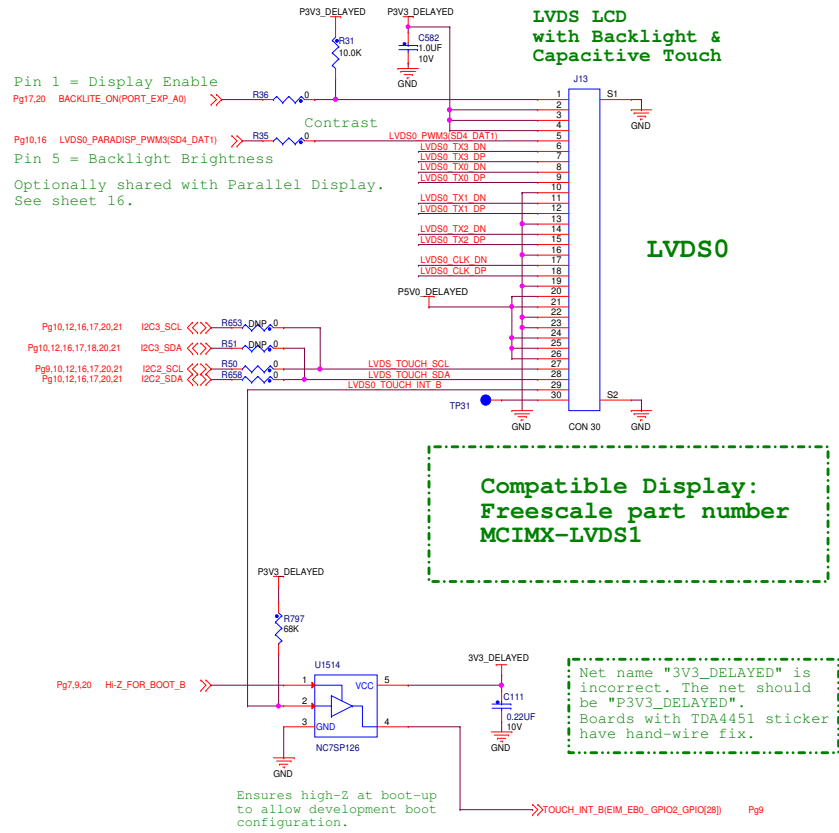

Depending on the cable and display, the touch interrupt may be noisy. If erroneous interrupts occur, adopters could consider adding a 0.22 uF capacitor to GND at U1514 pin 2. For mass production, a better solution is an R-C filter on the interrupt line feeding U1514 pin 2. Designers should check their preferred display's interrupt with an oscilloscope.

The MCIMX-LVDS1 display with touch can be placed in Sleep through the I2C port. However, INT_B must be driven with a falling edge to wake up the display, which is not allowed due to U1514.

The MCIMX-LVDS1 is not an automotive-grade display. For an automotive system, most likely the display with be placed in sleep and awakened through the I2C port. Adopters should consider their preferred display's requirements.

freescale

ICAP Classification: FCP: ___ FIUO: PUBI: X

Drawing Title: MCIMX6DLAICPU1

Page Title: LVDS Displays

Size	Document Number	Rev
C	SCH-27767 PDF: SPF-27767	A

Date: Friday, February 15, 2013 Sheet 15 of 22

Display Connectors

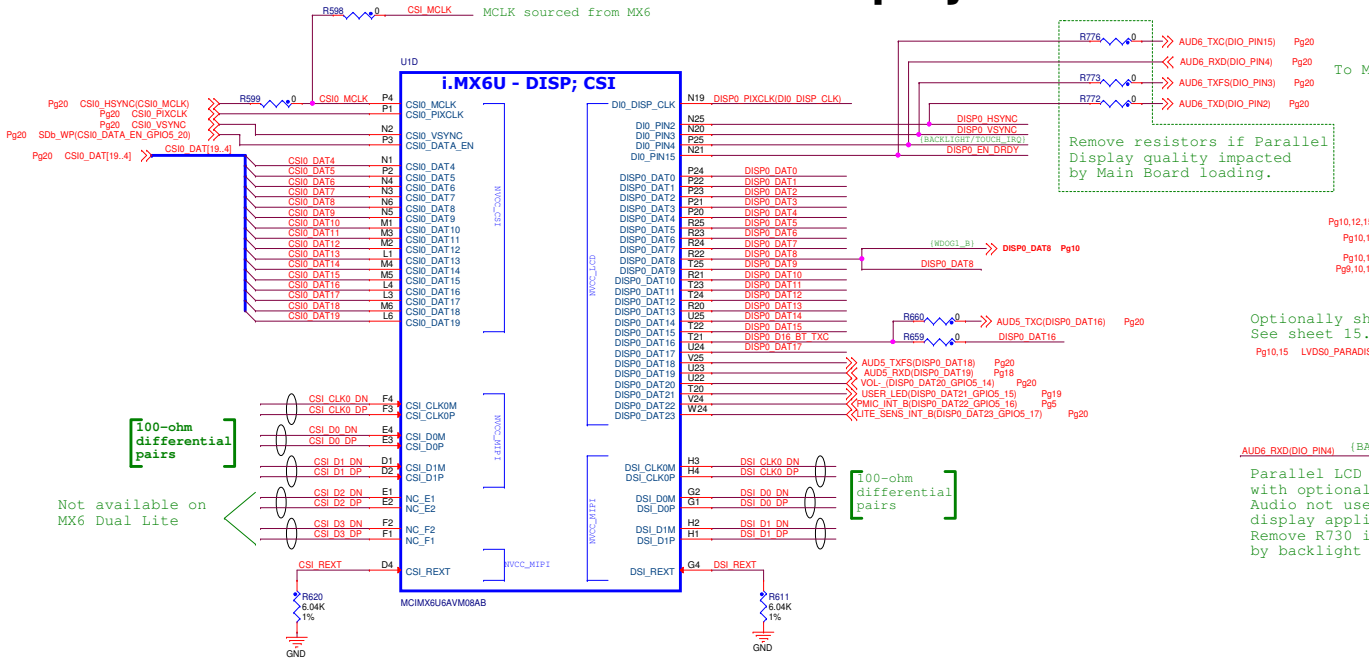

Parallel Display Connector

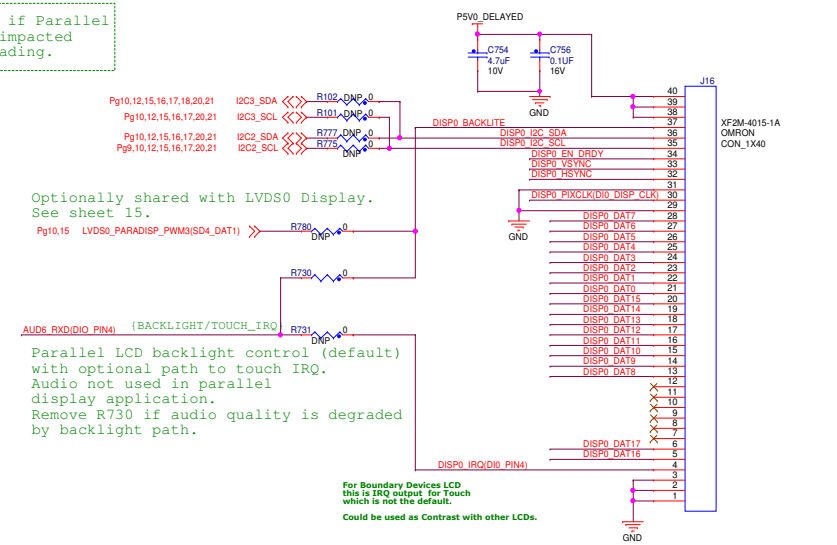

Compatible 7" 800 x 480 LCD and software driver available from Boundary Devices.
If touch is desired, order the LCD with I2C pull-ups removed.

Email: info@boundarydevices.com

MIPI Connector

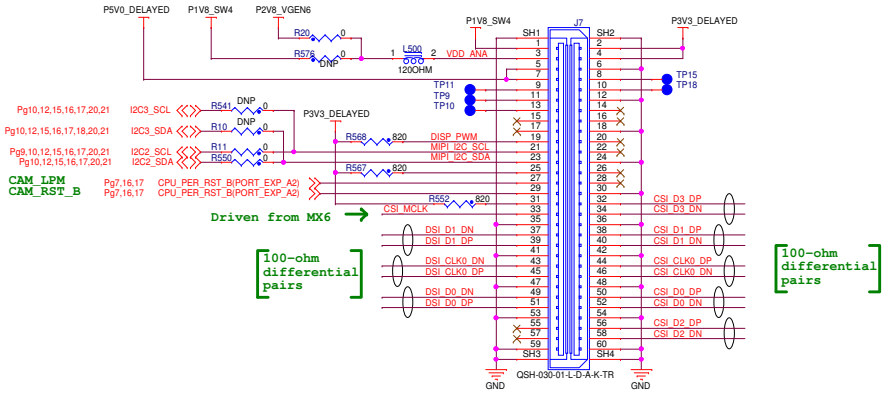

Analog Devices ADV7280 SD video decoder card may be used with cable. Contact ADI for more information.
Not directly compatible with Freescale MIPI Display and Camera Board due to mechanical clearance.

Suggested form factor for MIPI Card without cable use (All units are in inches).

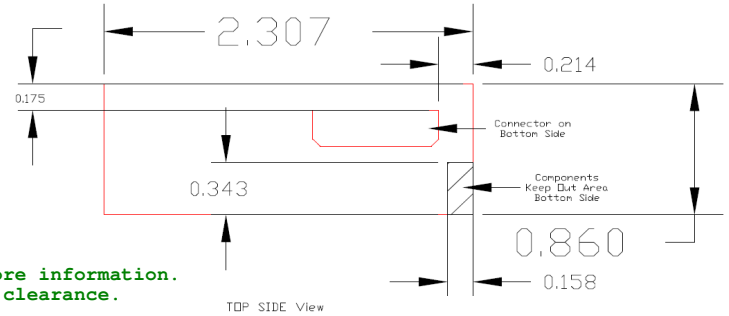

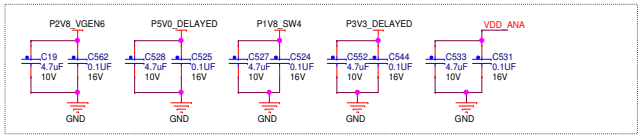

freescale

ICAP Classification:	FCP: ___ FIUO: PUBI: X
Drawing Title:	MCIMX6DLAICPU1
Page Title:	Parallel Display, MIPI port
Size C	Document Number SCH-27767 PDF: SPF-27767 Rev A
Date: Monday, November 12, 2012	Sheet 16 of 22

I2C I/O Expanders

Port Expander A

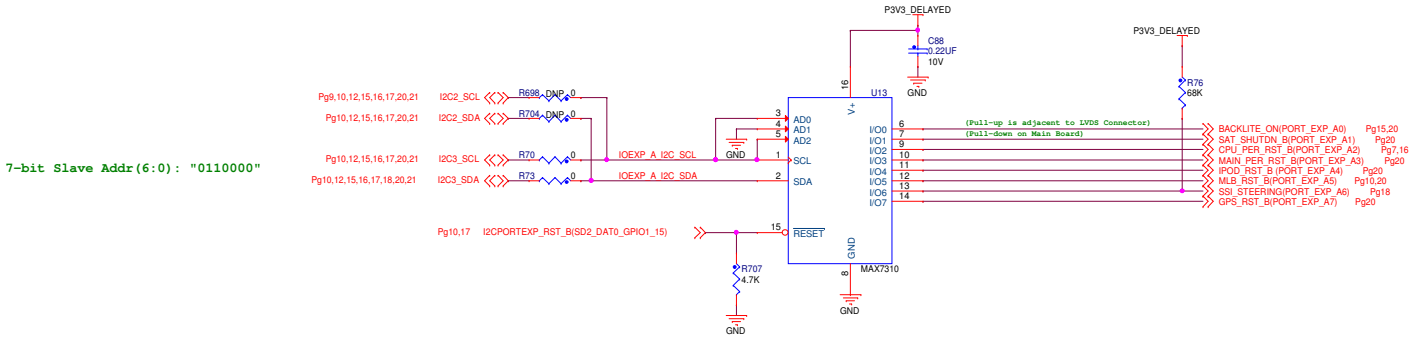

Port Expander B

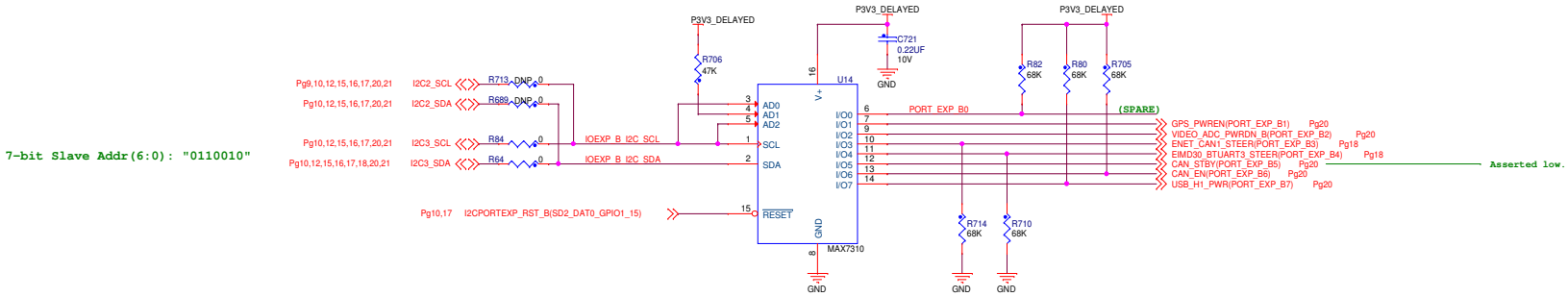

Port Expander C

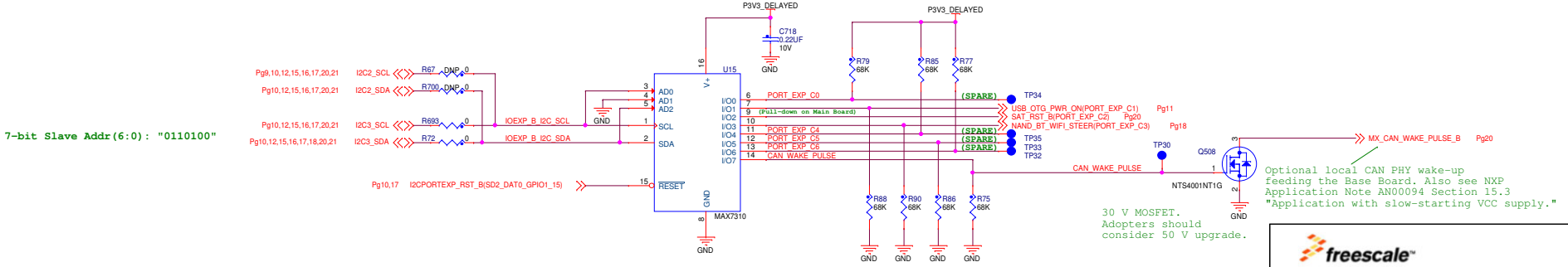

freescale

ICAP Classification: FCP: ___ FIUO: PUBI: X

Drawing Title: **MCIMX6DLAICPU1**

Page Title: **I2C - I/O Expanders**

Size	Document Number	Rev
C	SCH-27767 PDF: SPF-27767	A

Date: Monday, November 12, 2012 Sheet 17 of 22

Steering Logic

SATELLITE AND TERRESTRIAL TUNER AUDIO DATA STEERING

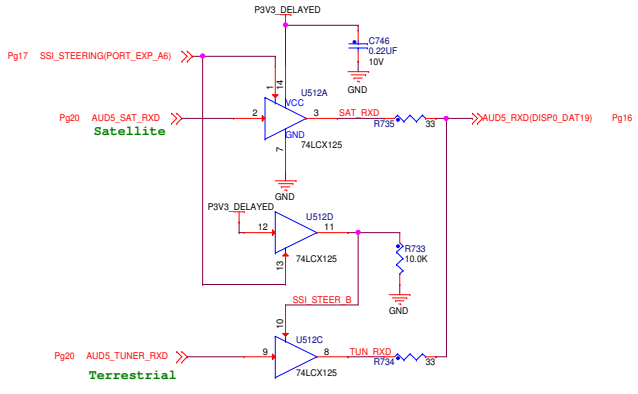

(Default = Terrestrial Tuner)

Steering logic required due to accommodating a superset of peripherals. For a more robust implementation, Freescale recommends adopters eliminate steering logic especially on the fast signals, since a subset of peripherals will be used in an actual application.

UART2 SHARED BETWEEN GPS AND SATELLITE

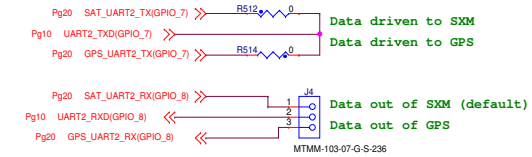

NAND FLASH AND BT_WIFI DATA STEERING

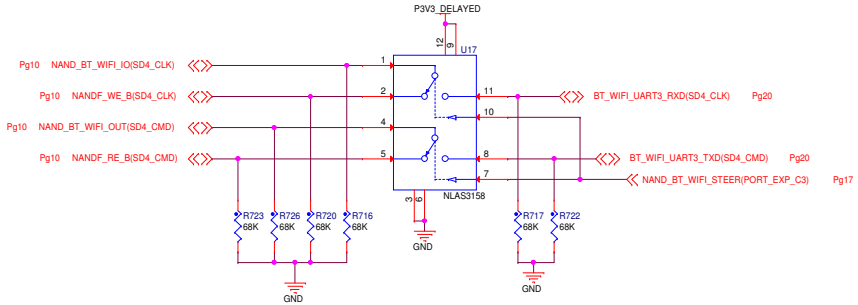

(Default = NAND FLASH)

EIM, UART3, and I2C STEERING

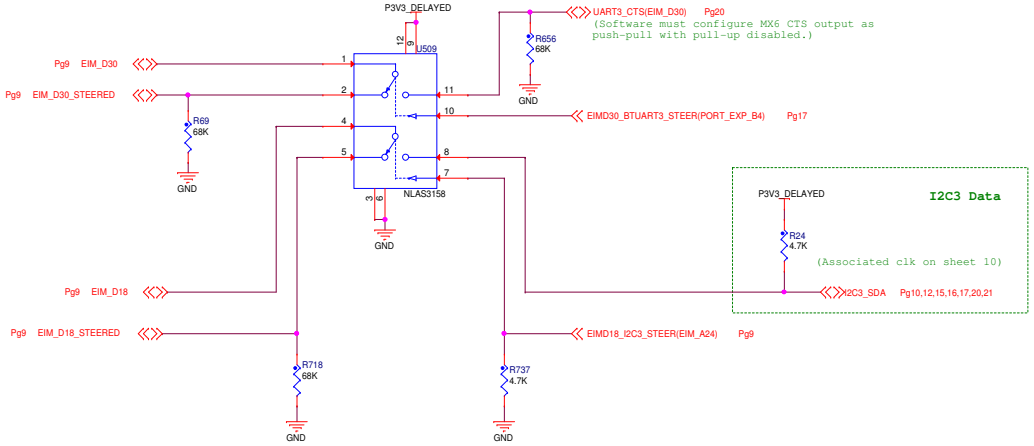

(Default = EIM)

ETHERNET AND CAN DATA STEERING SDa SLOT POWER DISCHARGE FOR RESET

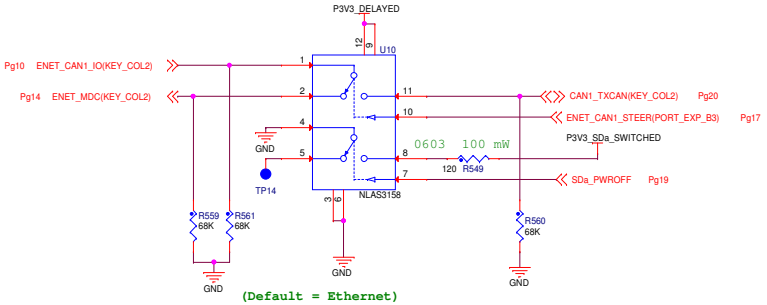

(Default = Ethernet)

R549 is for discharge current-limiting for SDXC support. Adopters might consider 0805 for operation at temperature extremes, if their available 0603 is not rated to 100 mW.

freescale

ICAP Classification:	FCP: ___	FIUO:	PUBI: _X_
Drawing Title:	MCIMX6DLAICPU1		
Page Title:	Steering logic		
Size C	Document Number SCH-27767 PDF: SPF-27767		Rev A
Date: Monday, November 12, 2012		Sheet 18 of 22	

Debug

UART

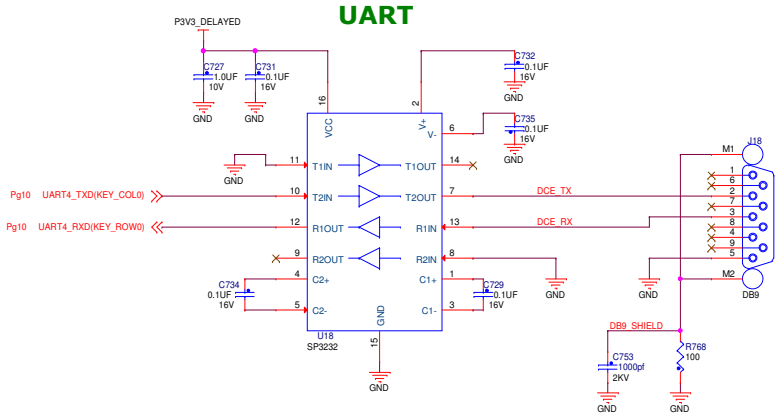

Debug LED and SDXC Power Control Inverter

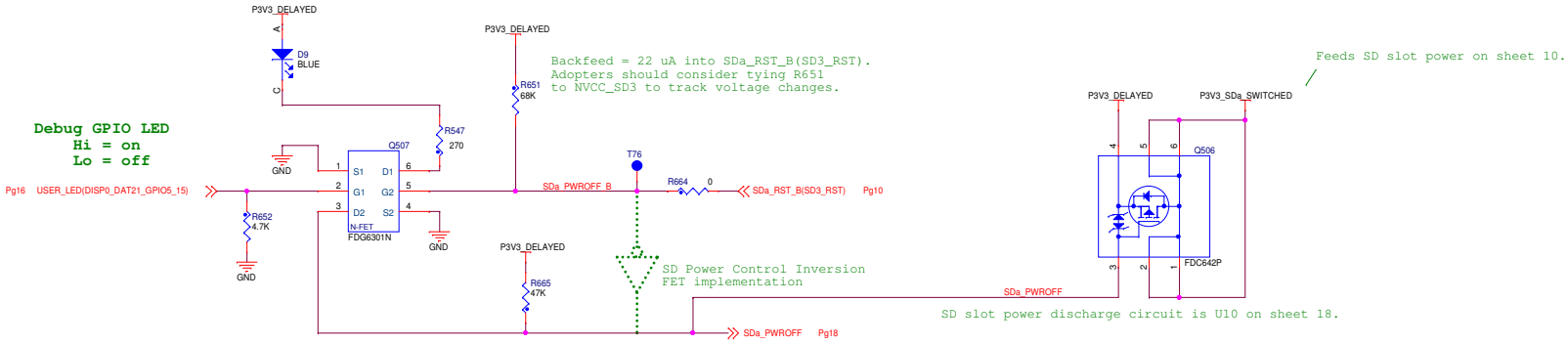

Spacers

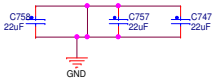

Place on bottom of board

Ground Test Points

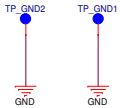

freescale

ICAP Classification: FCP: ___ FIUO: PUBI: _X_

Drawing Title: **MCIMX6DLAICPU1**

Page Title: **Debug UART, LED, Test Points**

Size	Document Number	Rev
C	SCH-27767 PDF: SPF-27767	A

Date: Monday, November 12, 2012 Sheet 19 of 22

CARD EDGE FINGERS
BOARD-TO-BOARD CONNECTION

Mating connector on Base Board

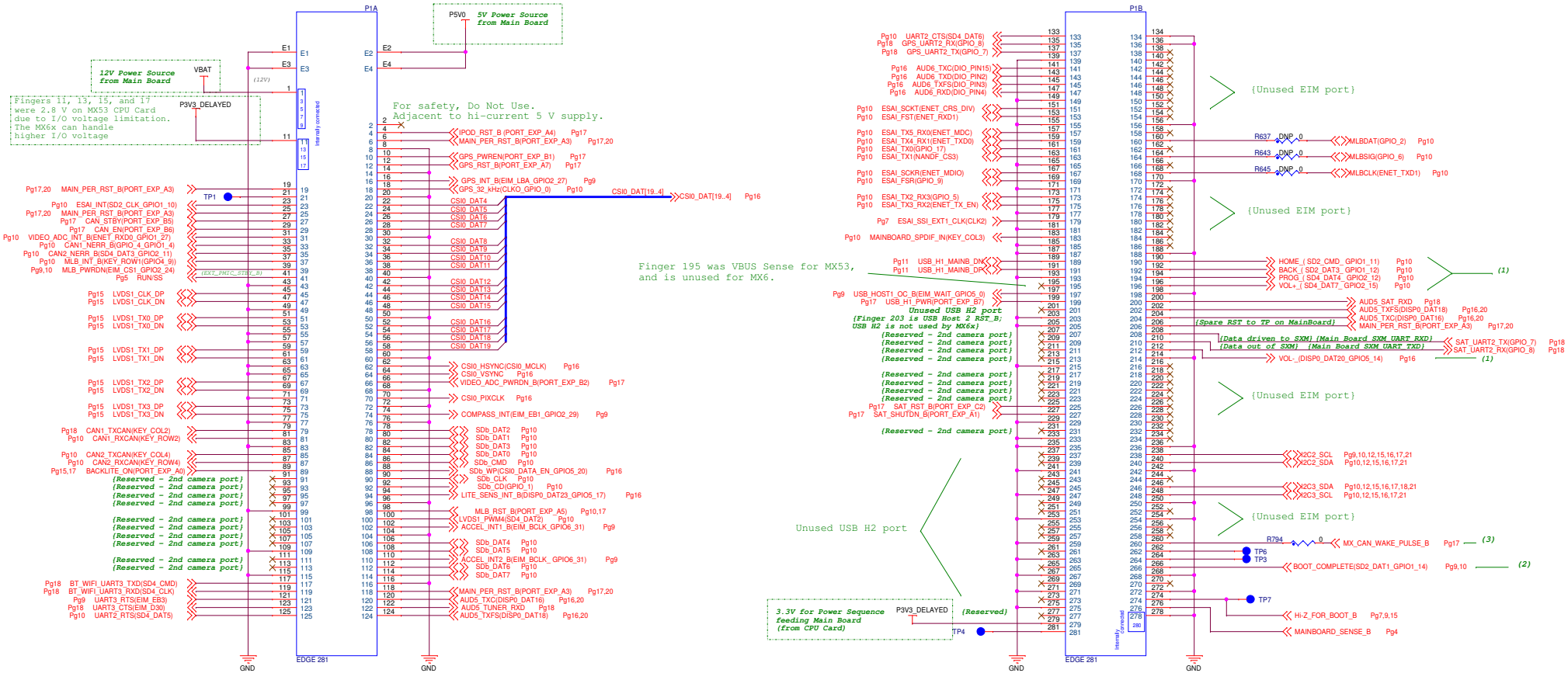

NOTES:

1 *If not Android, can be used as GPIO on Main Board. Main Board schematic cross-reference table does not apply to MX6.*

2 *Could be used as spare GPIO if SPI NOR is not needed.*

3 *Could be used as spare open-drain GPIO if not needed for local CAN PHY wake up.*

freescale

ICAP Classification: FCP: ___ FIUO: PUBI: X

Drawing Title: **MCIMX6DLAICPU1**

Page Title: **Card Edge Fingers**

Size	Document Number	Rev
C	SCH-27767 PDF: SPF-27767	A

Date: Monday, November 12, 2012 Sheet 20 of 22

Backup PCIe Oscillator

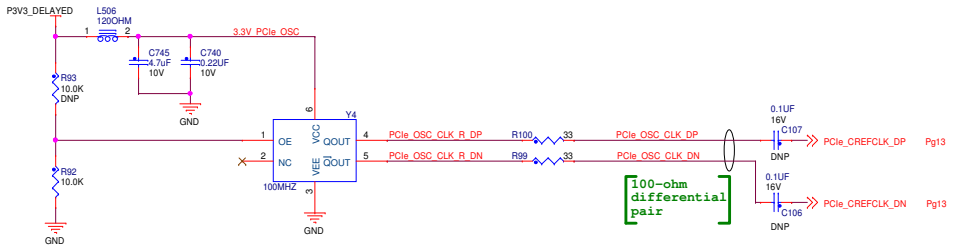

Unused Components

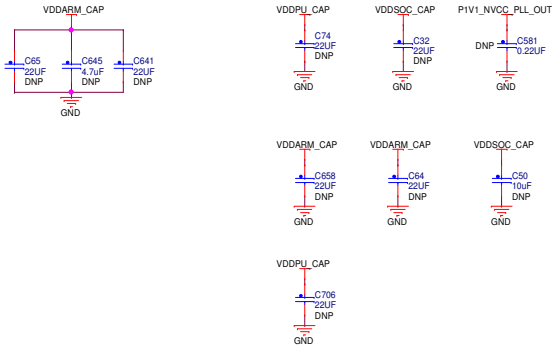

MCU & PMIC I2C Steering -- not needed for PMIC 1.0 or later

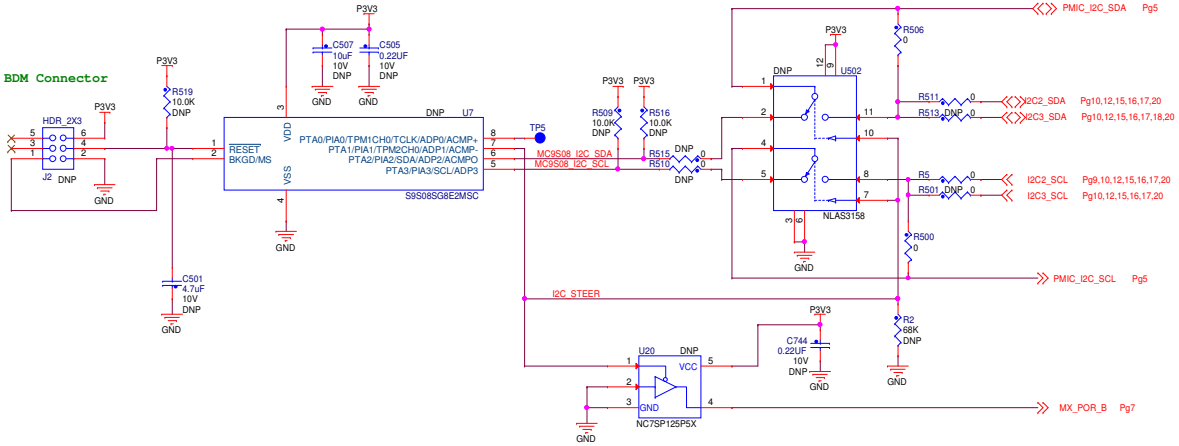

External PLL LDO no longer needed; MX6 was fixed.

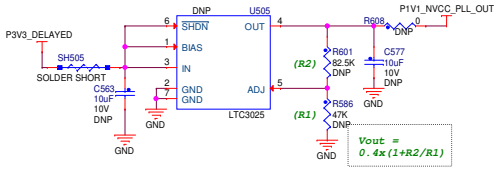

freescale

ICAP Classification:	FCP: ___	FIUO:	PUBI: _X_
Drawing Title: MCIMX6DLAICPU1			
Page Title: Contingency Circuits			
Size C	Document Number SCH-27767 PDF: SPF-27767		Rev A
Date: Monday, November 12, 2012		Sheet 21 of 22	

Revision History for Rev A

X1	Copied 27142 rev C X11. Changed out processor to MX6DL. Added appropriate notes for DL.	10/9/12
X2	Sheet 7 - Removed heatsink note. Throughout doc - Changed FIUO (Freescale Internal Use Only) to PUBI (Public Information.)	11/12/12
X3	Sheet 3 - Updated I2C notes. Sheet 5 - Updated notes for C21 and R26 deviations; made more generic. Add VDDIO backfeed note. Sheet 6 - Added note that C58 is not required. Sheet 13 - Added note on PCIe compliance. Sheet 15 - Added notes to J13 pins 1 and 5. Added LVDS display notes. Added info to U1514 note.	02/15/13

freescale

ICAP Classification: FCP: ___ FIUO: PUBI: _X_

Drawing Title: MCIMX6DLAICPU1

Page Title: Revision History

Size	Document Number	Rev
C	SCH-27767 PDF: SPF-27767	A

Date: Friday, February 15, 2013 Sheet 22 of 22