MCIMX6SLEVK board

Table of Content

Page 1	Title and Rev History
Page 2	Block Diagram
Page 3	SYS Power
Page 4	PMIC
Page 5	iMX6SL Power
Page 6	iMX6SL SoC
Page 7	LPDDR2
Page 8	EMMC, SD and SPI NOR
Page 9	USB
Page 10	Audio
Page 11	LDC + EPDC Connectors
Page 12	Wireless
Page 13	MISC
Page 14	UART & JTAG
Page 15	ENET
Page 16	IOMUX
Page 17	
Page 18	
Page 19	

Revision History

Rev. Code	Date	Description
A	2012/05/11	Rev A
B	2012/09/27	ENGR00225877. Replaced D24 with BAT54C-7-F ENGR00225876. DNP standoffs H1, H2, H3 and H4 ENGR00225878. Replaced R11, R129 and R130 with SH14, SH15 and SH16 respectively ENGR00225879. 1. Replaced U3 - MMPF0100NPEP with MMPF0100F1EP 2. Replaced C23 (0.1uF, 0402) with 0.22uF, 0201 3. Added C410, C412 per PMIC datasheet 4. Replaced C40 (0.1uF, 0402) with 0.22uF, 0201 5. Replaced C27, C28 and C32 (0.1uF) with 0.22uF 6. Replaced C70 (22uF, 0603, 6.3V) with 47uF, 0805, 10V ENGR00226044. Replaced P4 - WM-64PNT with WM-64PCT ENGR002226043. Replaced U2 - K4P8G304EB-AGC1 with MT42L256M32D2LG-25WT ENGR00225880. 1. Replaced C146 (10uF) with 47uF 2. Replaced C159 and C160 (0402, 6.3V) with 0603, 10V ENGR00225881. 1. Move PMIC SW1AB feedback to the load side of SH2 to compensate for SH2 voltage drops during current measurement. 2. Move PMIC SW1C feedback to the load side of SH3 to compensate for SH3 voltage drops during current measurement. 3. Move PMIC SW2 feedback to the load side of SH1 to compensate for SH1 voltage drops during current measurement. 4. Move PMIC SW3 feedback to the load side of SH5 to compensate for SH5 voltage drops during current measurement. ENGR00225088. Connected J12.117 to POR_B ENGR00226215. Renamed PFUSE_VIN net to PF0100_VIN ENGR00227037. Replaced all capacitors in PF0100_VIN net whose voltage rating is less than 10V with 10V capacitors: C46, C47, C66, C41, C48, C63, C58. ENGR00227038. Flipped the capacitors whose polarity was inverted: C4, C2, C11, C21, C36, C46, C47, C58, C66, C156, C166, C178, C218, C200. ENGR00223967: 1. Added test points TP42, 43, 44 and 45 2. The following pins were changed to NC in J8: CLKREQ#, UIM_C8, UIM_C4W, SMB_CLK, SMB_DATA, LED_WLAN#, LED_WPAN#, Reserved1-8, Reserved10 3. DNP C140, C191, C192 and C210 ENGR00229277: Y1 (CC7V-T1A) 9pF is selected as default/preferred part. However, 12pF version may be used for production board. ENGR229701: 1. Removed R195. 2. Replaced C152 (150uF) with 2.2uF

freescale

ICAP Classification: FCP: ___ FIUO: X PUBI: ___

Drawing Title: MCIMX6SLEVK board

Page Title: Title and Rev History

Size	Document Number	Rev
C	SCH-27452 PDF: SPF-27452	B

Date: Monday, October 15, 2012 Sheet 1 of 16

MCIMX6SLEVK board Diagram

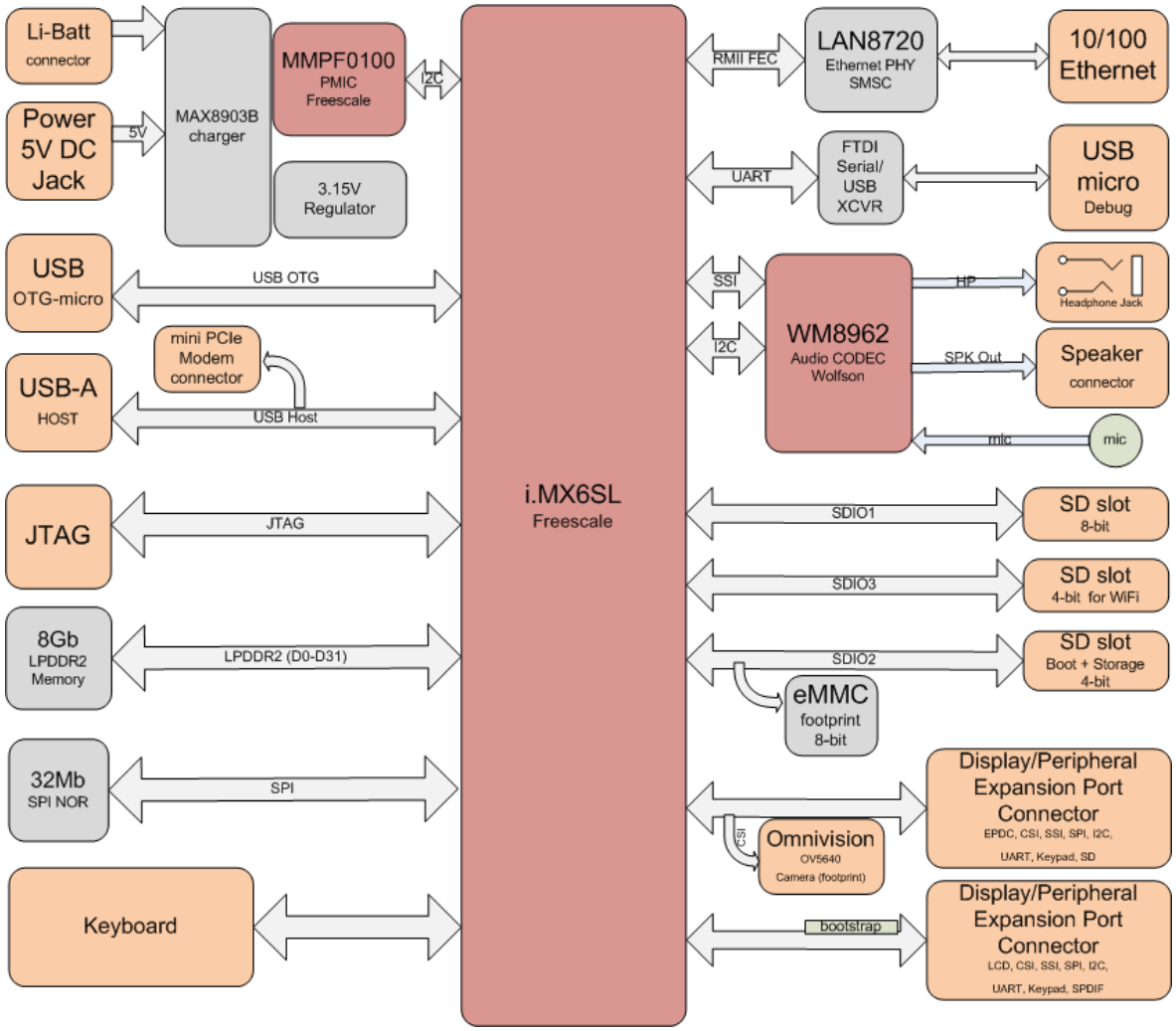

freescale™

ICAP Classification: FCP:___ FIUO: X PUBI:___

Drawing Title: **MCIMX6SLEVK board**

Page Title: **Block Diagram**

Size	Document Number	Rev
B	SCH-27452 PDF: SPF-27452	B

Date: Wednesday, October 10, 2012 Sheet 2 of 16

DC JACK 5V

Over Voltage Protection

Lithium Charger

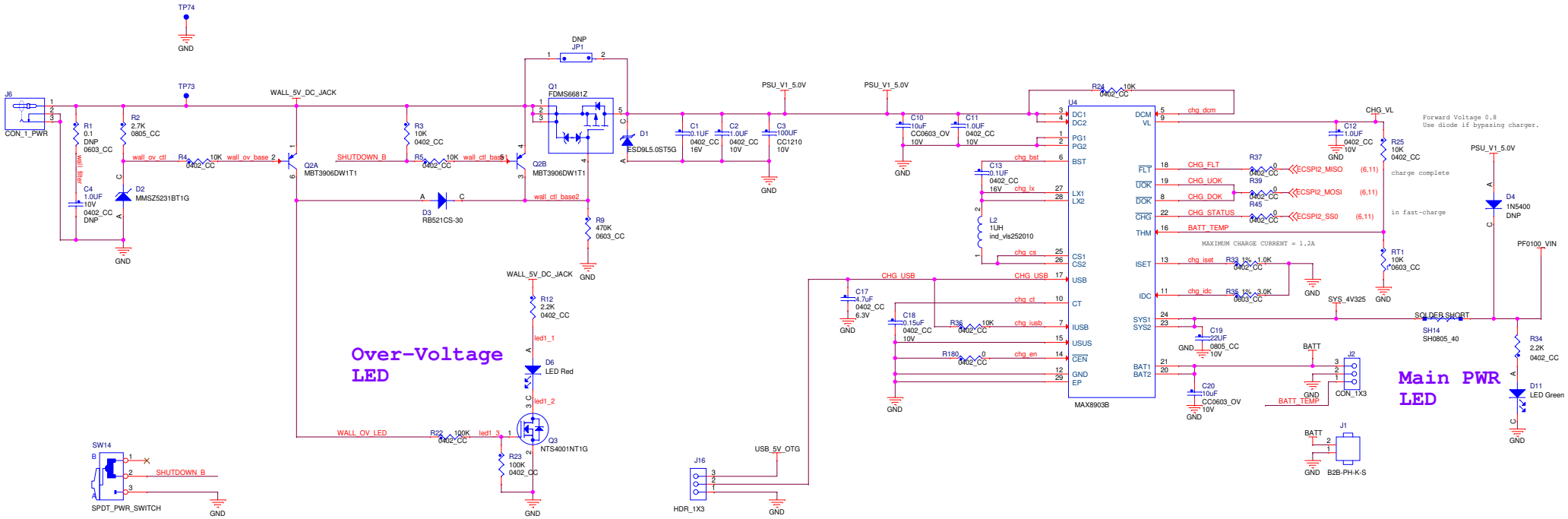

PWR Cut Switch For SW Development

Secondary Charge Source USB or Wireless Charger

Lithium single cell battery connectors

Note:
Shunt 2-3 to experiment with USB charging.

Use cable to pins 1 and 2 to experiment with wireless charging

NEED TO FIGURE OUT THIS BETTER

PWRCTRL3 is the capacitive touch interrupt.
MISO and SSO might be OK.
must permanently decide to eliminate ability to use ECSPI?
Also should use pullups inside the processor

freescale

ICAP Classification: FCP: ___ FIUO: X PUBI: ___

Drawing Title: MCIMX6SLEVK board

Page Title: SYS Power

Size	Document Number	Rev
C	SCH-27452 PDF: SPF-27452	B

Date: Wednesday, October 10, 2012 Sheet 3 of 16

Note:
MMPF0100 erratum ER19 can affect some of the systems, depending on the system characteristics. Please check this erratum and its workaround to see if applies.

Freescale MMPF0100NPEP PMIC

Note:
This device is factory configurable for voltage and timings.
This reference design is configured to run from factory pre-programmed parts.
Ordering selections with common i.MX6SL voltages/timings are available.
Please check the device datasheet for latest ordering info.

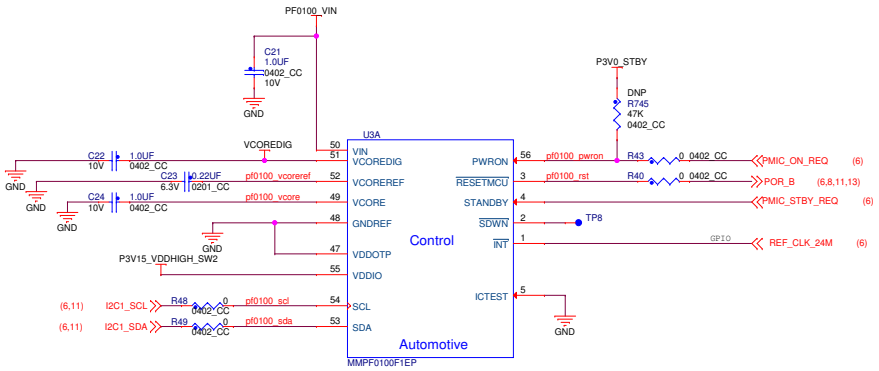

With low-inductive paths between VIN the voltage sources, either 0.22 uF or 0.47 uF may be used.

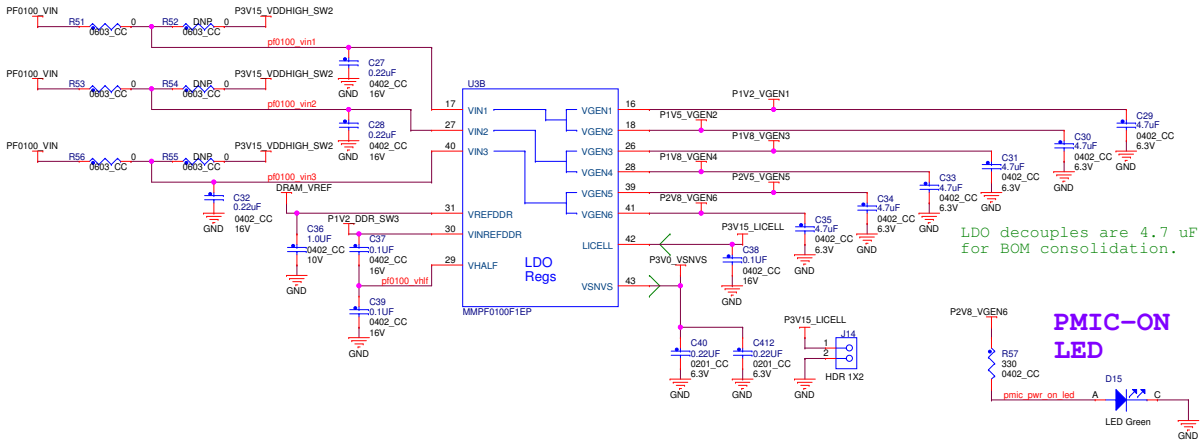

LDO decouples are 4.7 uF for BOM consolidation.

PMIC-ON LED

PMIC output rails				
PF0100	Voltage(V)	Current(A)	Power up sequence	Note
SW1A/B	1.375	2.5	1	
SW1C	1.375	1.7	1	
SW2	3.15	2	2	
SW3A/B	1.2	2.5	4	
SW4	1.8	1	3	
SWBST	5	0.6		
VGEN1	1.2	0.1	4	
VGEN2	1.5	0.25		
VGEN3	1.8	0.1		
VGEN4	1.8	0.35	3	
VGEN5	2.5	0.1	5	LED
VGEN6	2.8	0.2		
VSNVS	3	0.0002	0	
VREFDDR	0.6	0.01	4	

SW1A/B = 1.375 V for boot-up at ~800 MHz.
Recommend that software increase SW1A/B to 1.425 V for 1 GHz operation.

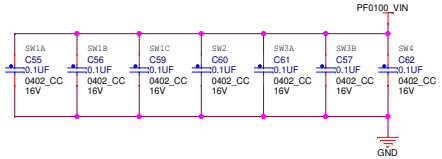

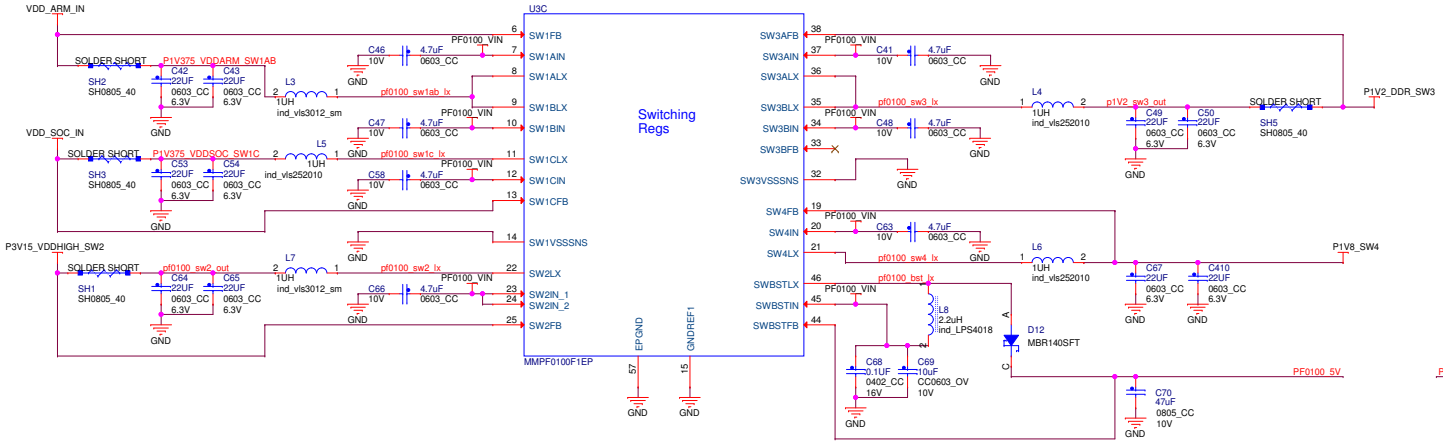

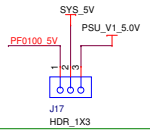

Note:
Switcher currents and optimum inductor sizes vary depending on application.
Please refer to the latest part datasheet for inductor recommendations.

Note: J17
Shunt 1-2 for SYS_5V from PMIC: 600mA limited
Shunt 2-3 for SYS_5V from wall adapter

freescale

ICAP Classification: FCP: ___ FIUO: X PUBI: ___

Drawing Title: **MCIMX6SLEVK board**

Page Title: **PMIC**

Size	Document Number	Rev
C	SCH-27452 PDF: SPF-27452	B

Date: Thursday, October 11, 2012 Sheet 4 of 16

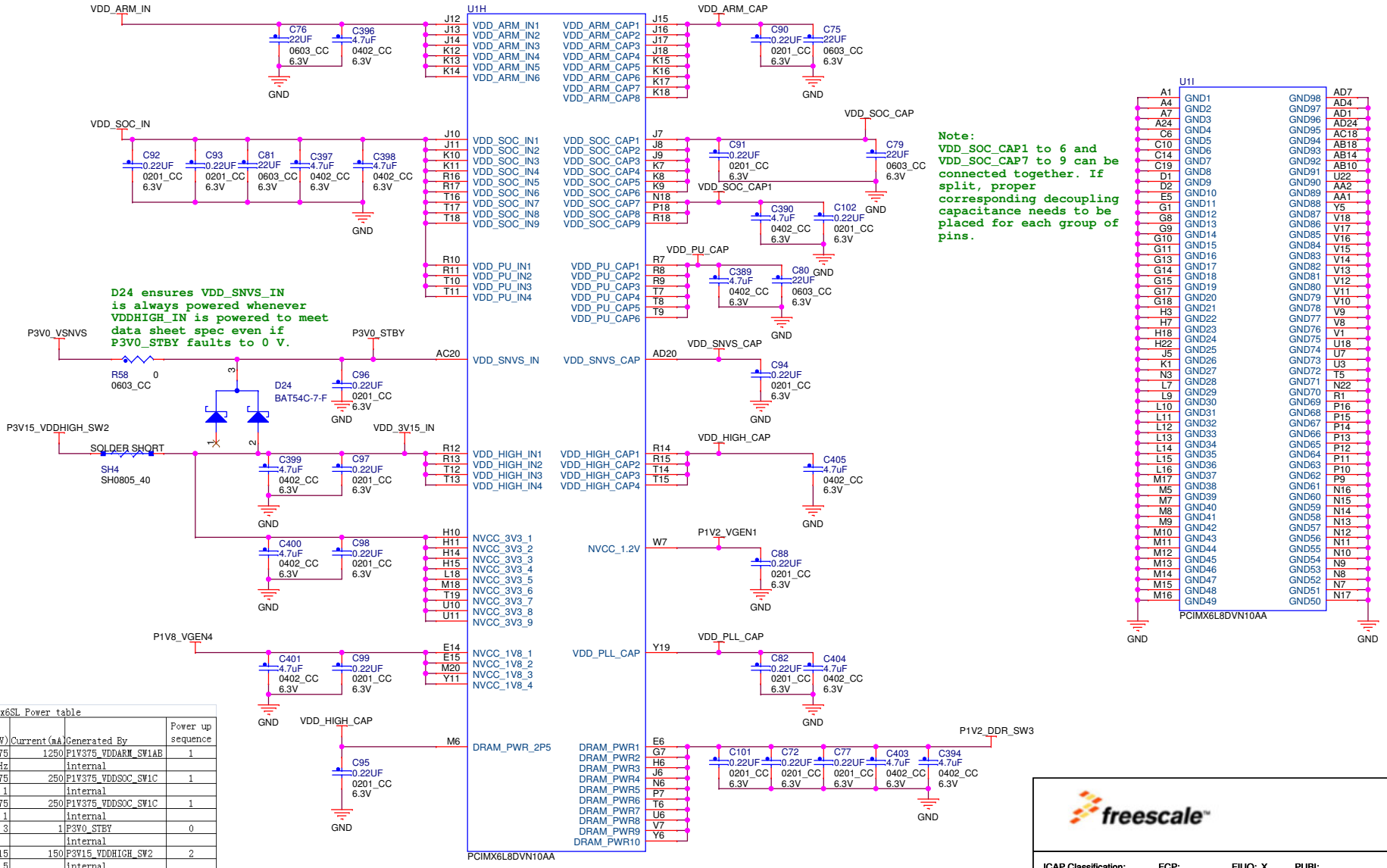

i.mx6SL Power table

i.mx6SL Voltage Rail	Voltage(V)	Current(mA)	Generated By	Power up sequence
VDD_ARM_IN	1.375	1250	P1V375_VDDARM_SW1AB	1
VDD_ARM_CAP	1.2@1GHz		internal	
VDD_SOC_IN	1.375	250	P1V375_VDDSOC_SW1C	1
VDD_SOC_CAP	1.1		internal	
VDD_PU_IN	1.375	250	P1V375_VDDSOC_SW1C	1
VDD_PU_CAP	1.1		internal	
VDD_SNVS_IN	3	1	P3V0_STBY	0
VDD_SNVS_CAP			internal	
VDD_HIGH_IN	3.15	150	P3V15_VDDHIGH_SW2	2
VDD_HIGH_CAP	2.5		internal	
NVCC_3V3	3.15	150	P3V15_VDDHIGH_SW2	2
NVCC_1V8	1.8	125	P1V8_VGEN4	3
NVCC_1.2V	1.2		P1V2_VGEN1	4
VDD_PLL_CAP	1.1		internal	
VDD_USB_CAP	3		internal	
DARM_PWR_2P5	2.5		VDD_HIGH_CAP	2
DRAM_PWR	1.2	200	P1V2_DDR_SW3	4
DRAM_VREF	0.6		P0V6_VREFDDR	4

freescale

ICAP Classification: FCP:___ FIUO: X PUBI:___

Drawing Title: **MCIMX6SLEVK board**

Page Title: **IMX6SL_Power**

Size	Document Number	Rev
B	SCH-27452 PDF: SPF-27452	B

Date: Thursday, October 11, 2012 Sheet 5 of 16

i.MX6SL

LCD

U1C — PCIMX6L8DVN10AA

Pin	Signal	Net	Note
T22	LCD_CLK	LCD_CLK	(11)
J24	LCD_ENABLE	LCD_ENABLE	(11)
H23	LCD_HSYNC	LCD_HSYNC	(11)
J23	LCD_VSYNC	LCD_VSYNC	(11)
H24	LCD_RESET	LCD_RESET	(11)
Y24	LCD_DAT0	LCD_DAT0	(11,13)
W23	LCD_DAT1	LCD_DAT1	(11,13)
W24	LCD_DAT2	LCD_DAT2	(11,13)
V23	LCD_DAT3	LCD_DAT3	(11,13)
V24	LCD_DAT4	LCD_DAT4	(11,13)
U21	LCD_DAT5	LCD_DAT5	(11,13)
U23	LCD_DAT6	LCD_DAT6	(11,13)
U24	LCD_DAT7	LCD_DAT7	(11,13)
T23	LCD_DAT8	LCD_DAT8	(11,13)
T24	LCD_DAT9	LCD_DAT9	(11,13)
R23	LCD_DAT10	LCD_DAT10	(11,13)
R24	LCD_DAT11	LCD_DAT11	(11,13)
P23	LCD_DAT12	LCD_DAT12	(11,13)
P24	LCD_DAT13	LCD_DAT13	(11,13)
N21	LCD_DAT14	LCD_DAT14	(11,13)
N23	LCD_DAT15	LCD_DAT15	(11,13)
N24	LCD_DAT16	LCD_DAT16	(11,13)
M22	LCD_DAT17	LCD_DAT17	(11,13)
M23	LCD_DAT18	LCD_DAT18	(11,13)
M24	LCD_DAT19	LCD_DAT19	(11,13)
L23	LCD_DAT20	LCD_DAT20	(11,13)
L24	LCD_DAT21	LCD_DAT21	(11,13)
K23	LCD_DAT22	LCD_DAT22	(11,13)
K24	LCD_DAT23	LCD_DAT23	(11,13)

EPDC

Primary Use

U1B — PCIMX6L8DVN10AA

Pin	Signal	Net	Note
A18	EPDC_D0	EPDC_D0	(11)
A17	EPDC_D1	EPDC_D1	(11)
B17	EPDC_D2	EPDC_D2	(11)
A16	EPDC_D3	EPDC_D3	(11)
B16	EPDC_D4	EPDC_D4	(11)
A15	EPDC_D5	EPDC_D5	(11)
B15	EPDC_D6	EPDC_D6	(11)
C15	EPDC_D7	EPDC_D7	(11)
D15	EPDC_D8	EPDC_D8	(11)
F15	EPDC_D9	EPDC_D9	(11)
G16	EPDC_D10	EPDC_D10	(11)
F14	EPDC_D11	EPDC_D11	(11)
D14	EPDC_D12	EPDC_D12	(11)
B14	EPDC_D13	EPDC_D13	(11)
A14	EPDC_D14	EPDC_D14	(11)
A13	EPDC_D15	EPDC_D15	(11)
B10	EPDC_SDCLK	EPDC_SDCLK	(11)
B8	EPDC_SDLE	EPDC_SDLE	(11)
E7	EPDC_SDOE	EPDC_SDOE	(11)
F7	EPDC_SDSHR	EPDC_SDSHR	(11)
C11	EPDC_SDCE0	EPDC_SDCE0	(11)
A10	EPDC_SDCE1	EPDC_SDCE1	(11)
B9	EPDC_SDCE2	EPDC_SDCE2	(11)
A9	EPDC_SDCE3	EPDC_SDCE3	(11)
A12	EPDC_GDCLK	EPDC_GDCLK	(11)
B13	EPDC_GDOE	EPDC_GDOE	(11)
B12	EPDC_GDRL	EPDC_GDRL	(11)
A11	EPDC_GDSP	EPDC_GDSP	(11)
C7	EPDC_VCOM0	EPDC_VCOM0	(11)
D7	EPDC_VCOM1	EPDC_VCOM1	(11)
C18	EPDC_BDR0	EPDC_BDR0	(11)
B18	EPDC_BDR1	EPDC_BDR1	(11)
D11	EPDC_PWRCTRL0	EPDC_PWRCTRL0	(11)
E11	EPDC_PWRCTRL1	EPDC_PWRCTRL1	(11)
F11	EPDC_PWRCTRL2	EPDC_PWRCTRL2	(11)
G12	EPDC_PWRCTRL3	EPDC_PWRCTRL3	(11)
B11	EPDC_PWRCOM	EPDC_PWRCOM	(9,11)
F10	EPDC_PWRINT	EPDC_PWRINT	(11)
E10	EPDC_PWRSTAT	EPDC_PWRSTAT	(11)
D10	EPDC_PWRWAKEUP	EPDC_PWRWAKEUP	(11)

Capacitive Touch Interrupt
USB_OTG1_ID

SD

Primary Use

U1E — PCIMX6L8DVN10AA

Pin	Signal	Net	Note
B20	SD1_CLK	SD1_CLK	(8)
B21	SD1_CMD	SD1_CMD	(8)
B23	SD1_DAT0	SD1_DAT0	(8)
A23	SD1_DAT1	SD1_DAT1	(8)
C22	SD1_DAT2	SD1_DAT2	(8)
B22	SD1_DAT3	SD1_DAT3	(8)
A22	SD1_DAT4	SD1_DAT4	(8)
A21	SD1_DAT5	SD1_DAT5	(8)
A20	SD1_DAT6	SD1_DAT6	(8)
A19	SD1_DAT7	SD1_DAT7	(8)
Y23	SD2_RST	SD2_RST	(8,11)
AC24	SD2_CLK	SD2_CLK	(8)
AB24	SD2_CMD	SD2_CMD	(8)
AB22	SD2_DAT0	SD2_DAT0	(8)
AB23	SD2_DAT1	SD2_DAT1	(8)
AA22	SD2_DAT2	SD2_DAT2	(8)
AA23	SD2_DAT3	SD2_DAT3	(8)
AA24	SD2_DAT4	SD2_DAT4	(8,11)
Y20	SD2_DAT5	SD2_DAT5	(8,11)
Y21	SD2_DAT6	SD2_DAT6	(8)
Y22	SD2_DAT7	SD2_DAT7	(8)
AB11	SD3_CLK	SD3_CLK	(8)
AA11	SD3_CMD	SD3_CMD	(8)
AC11	SD3_DAT0	SD3_DAT0	(8)
AD11	SD3_DAT1	SD3_DAT1	(8)
AC12	SD3_DAT2	SD3_DAT2	(8)
AD12	SD3_DAT3	SD3_DAT3	(8)

SPDIF
UART_RX
UART_TX
SD2 Write Protect
SD2 Card Detect

Control

U1A — PCIMX6L8DVN10AA

Pin	Signal	Net	Note
AA15	JTAG_TRSTB	JTAG_TRSTB	(14)
W14	JTAG_TDI	JTAG_TDI	(14)
Y15	JTAG_TMS	JTAG_TMS	(14)
AA14	JTAG_TCK	JTAG_TCK	(14)
W15	JTAG_TDO	JTAG_TDO	(14)
Y14	JTAG_MOD	JTAG_MOD	(14)
Y18	TAMPER	TAMPER	
AD15	PMIC_ON_REQ	PMIC_ON_REQ	(4)
AD16	PMIC_STBY_REQ	PMIC_STBY_REQ	(4)
AC16	POR_B	POR_B	(4,6,8,11,13)
W18	ONOFF	ONOFF	(6)
AC15	BOOT_MODE0	BOOT_MODE0	(13)
AB15	BOOT_MODE1	BOOT_MODE1	(13)
U15	TEST_MODE		
F18	WDOG_B	WDOG_B	(6)
AD22	GANAIO	GANAIO	
AD21	XTALI	XTALI	
AC21	XTALO	XTALO	
AB19	RTC_XTALI	RTC_XTALI	
AA19	RTC_XTALO	RTC_XTALO	
AC23	CLK1P	CLK1P	
AD23	CLK1N	CLK1N	

ONOFF

P3V15_VDDHIGH_SW2

J20 DNP 128-0711-20 — HSIC_STROBE — GND

J19 DNP 128-0711-20 — HSIC_DAT — GND

J136 HDR 2X4: TAMPER, GANAIO, HSIC_DAT_GPIO, CLK1P, HSIC_STROBE_GPIO, CLK1N

HSIC_DAT — R38 0 0402_CC
HSIC_STROBE — R60 0 0402_CC — HSIC_STROBE_GPIO (14)

Audio,UART,FEC

Primary Use

U1D — PCIMX6L8DVN10AA

Pin	Signal	Net	Note
J19	AUD_RXFS	AUD_RXFS	(12)
J21	AUD_RXC	AUD_RXC	(12)
J20	AUD_RXD	AUD_RXD	(10)
H20	AUD_TXC	AUD_TXC	(10)
H21	AUD_TXFS	AUD_TXFS	(10)
J22	AUD_TXD	AUD_TXD	(10)
H19	AUD_MCLK	AUD_MCLK	(10)
B19	UART1_RXD	UART1_RXD	(14)
D19	UART1_TXD	UART1_TXD	(14)
AC13	I2C1_SCL	I2C1_SCL	(4,6,11)
AD13	I2C1_SDA	I2C1_SDA	(4,6,11)
E18	I2C2_SCL	I2C2_SCL	(6,10,11)
D18	I2C2_SDA	I2C2_SDA	(6,10,11)
N19	ECSPI1_SCLK	ECSPI1_SCLK	(8)
N20	ECSPI1_MOSI	ECSPI1_MOSI	(8)
M19	ECSPI1_MISO	ECSPI1_MISO	(8)
M21	ECSPI1_SS0	ECSPI1_SS0	(8)
U19	ECSPI2_SCLK	ECSPI2_SCLK	(8,9,11)
U20	ECSPI2_MOSI	ECSPI2_MOSI	(3,11)
T20	ECSPI2_MISO	ECSPI2_MISO	(3,11)
T21	ECSPI2_SS0	ECSPI2_SS0	(3,11)
AB7	FEC_MDIO	FEC_MDIO	(15)
AC8	FEC_TX_CLK	FEC_TX_CLK	(15)
AD9	FEC_RX_ER	FEC_RX_ER	(10)
AC9	FEC_CRS_DV	FEC_CRS_DV	(15)
AC10	FEC_RXD1	FEC_RXD1	(15)
Y10	FEC_TXD0	FEC_TXD0	(15)
AA7	FEC_MDC	FEC_MDC	(15)
AA10	FEC_RXD0	FEC_RXD0	(15)
AD10	FEC_TX_EN	FEC_TX_EN	(15)
W11	FEC_TXD1	FEC_TXD1	(15)
W10	FEC_REF_CLK	FEC_REF_CLK	(15)

3G Card Enable
3G Card Reset

USB_5V_HOST Over-current Flag
Charger-Ok Status
Charger-fault status
Charging status

Ethernet power enable
Headphone detect

Keypad,HSIC,PWM

Primary Use

U1G — PCIMX6L8DVN10AA

Pin	Signal	Net	Note
G24	KEY_ROW0	KEY_ROW0	(11,12)
F24	KEY_ROW1	KEY_ROW1	(11,12)
E24	KEY_ROW2	KEY_ROW2	(11,12)
E21	KEY_ROW3	KEY_ROW3	(11)
E19	KEY_ROW4	KEY_ROW4	(9,11)
D23	KEY_ROW5	KEY_ROW5	(11)
C24	KEY_ROW6	KEY_ROW6	(11)
B24	KEY_ROW7	KEY_ROW7	(8,11)
G23	KEY_COL0	KEY_COL0	(11,12)
F23	KEY_COL1	KEY_COL1	(11,12)
E23	KEY_COL2	KEY_COL2	(11,12)
E22	KEY_COL3	KEY_COL3	(8,11)
E20	KEY_COL4	KEY_COL4	(9,11)
D24	KEY_COL5	KEY_COL5	(9,11)
D22	KEY_COL6	KEY_COL6	(11)
C23	KEY_COL7	KEY_COL7	(8,11)
Y7	PWM1	PWM1	(11)
AA6	HSIC_DAT	HSIC_DAT	
AB6	HSIC_STROBE	HSIC_STROBE	
AC14	REF_CLK_24M	REF_CLK_24M	(4)
AD14	REF_CLK_32K	REF_CLK_32K	(8)

USB_5V_OTG Over-current Flag
LCD_Power_EN
Accelerometer Interrupt
SD1 Card Detect
USB_5V_OTG Enable
USB_5V_HOST Enable
Capacitive Touch Reset
SD1 Write Protect
LCD_Brightness
Debug LED
PMIC INT
SD3 Card Detect

I2C pullups

P3V15_VDDHIGH_SW2

R84 1.0K 0402_CC 1% — R85 1.0K 0402_CC 1%
I2C1_SCL (4,6,11)
I2C1_SDA (4,6,11)

P3V15_VDDHIGH_SW2

R86 1.0K 0402_CC 1% — R87 1.0K 0402_CC 1%
I2C2_SCL (6,10,11)
I2C2_SDA (6,10,11)

Note: Pull-up resistor must be sized to meet the signal rise times and also the Vil spec of all the bus components.

Due to board loadings this resistor was reduced. Validate your design, with the largest allowable resistor to reduce current usage.

32.768kHz

RTC_XTALI
RTC_XTALO
Y1 32.768kHz
C195 18pF 0402_CC 25V — C194 18pF 0402_CC 25V
GND

24MHz

XTALI
XTALO
1.0M DNP R373 0402_CC
Y3 24MHz
C197 16PF 0603_CC 50V — C196 16PF 0603_CC 50V
R778 2.21M 0603_CC
GND

POR Reset

P3V15_VDDHIGH_SW2
R393 10K 0402_CC DNP
D19
(6) WDOG_B — R59 0 0603_CC DNP
(14) JTAG_nSRST
BAT54A-7-F
SW2 SPST PB
POR_B (4,6,8,11,13)
RESET

Note: Watchdog reset is being taken care of internally.

On/Off

SW1 SPST PB
ONOFF (6)
D20 BAT54A-7-F
R50 0 0603_CC — WDOG_B (6)
R46 0 0603_CC DNP — HSIC_DAT_GPIO
ON/OFF

USB

Primary Use

VDD_USB_CAP
C402 4.7uF 0402_CC 6.3V — C100 0.22UF 0201_CC 6.3V
U14 VDD_USB_CAP

U1J — PCIMX6L8DVN10AA

Pin	Signal	Net
AA18	USB_OTG1_VBUS	IMX_OTG_VBUS
AC19	USB_OTG1_DP	USB_OTG1_D_P (9)
AD19	USB_OTG1_DN	USB_OTG1_D_N (9)
AC22	USB_OTG1_CHD	
AA18	USB_OTG2_VBUS	
AC17	USB_OTG2_DP	USB_Host_VBUS (9)
AD17	USB_OTG2_DN	

3GCARD_USB_D_P
3GCARD_USB_D_N

Q30 IRLML6401
IMX_OTG_VBUS — USB_OTG1_VBUS (9)
R410 10K 0402_CC
P3V15_VDDHIGH_SW2
Q31 2N7002

MX_USB_HOST_D_P — SH12 0 — PCIE_USB_Host_D_P (12) — USB_Host_D_P (9)
MX_USB_HOST_D_N — SH13 0 — PCIE_USB_Host_D_N (12) — USB_Host_D_N (9)

freescale

ICAP Classification: FCP:___ FIUO: X PUBI:___
Drawing Title: MCIMX6SLEVK board
Page Title: IMX6SL_SoC
Size C | Document Number SCH-27452 PDF: SPF-27452 | Rev B
Date: Thursday, October 11, 2012 | Sheet 6 of 16

i.MX6SL

DDR

LPDDR2

8Gb 400MHz clock

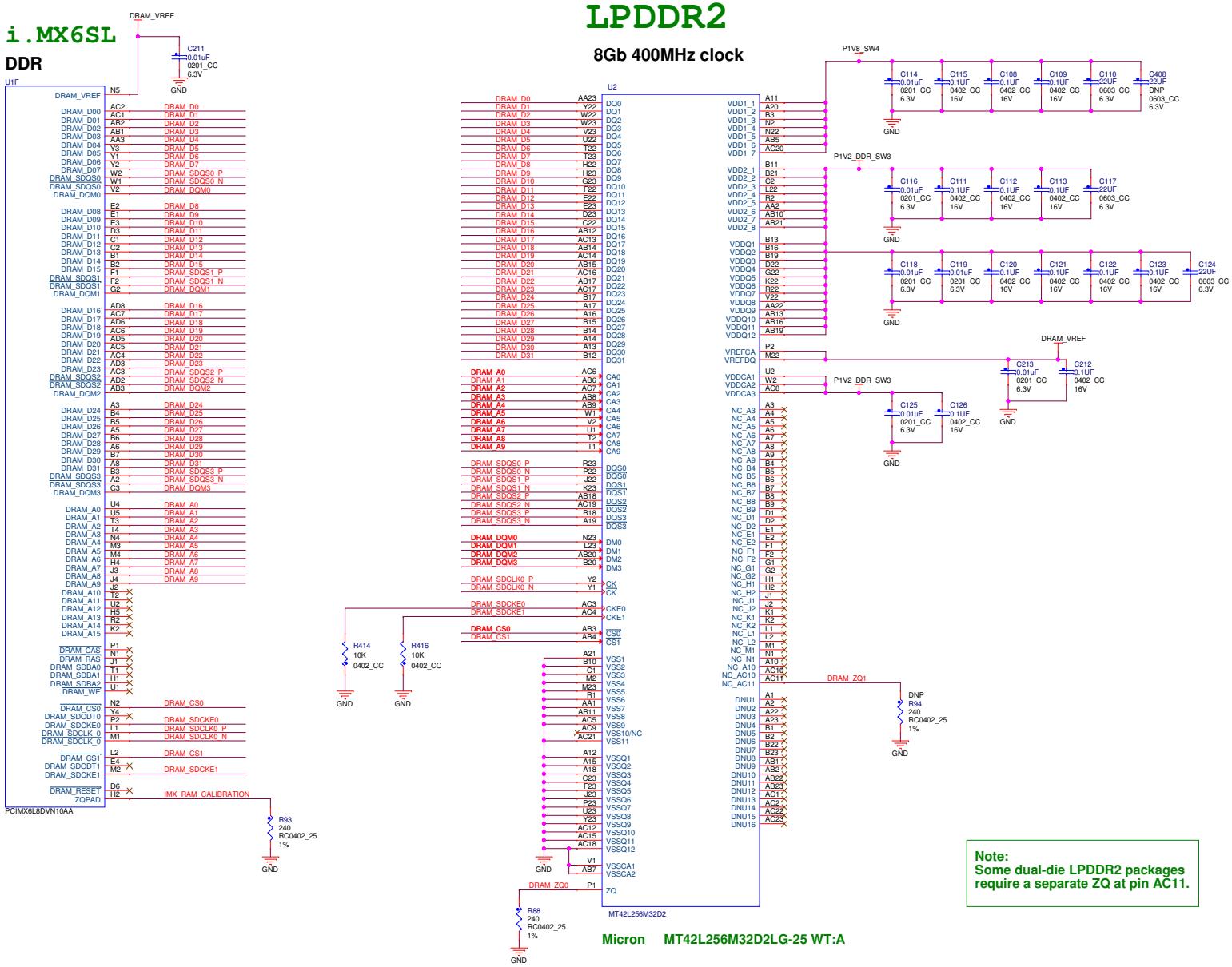

Micron MT42L256M32D2LG-25 WT:A

Note:
Some dual-die LPDDR2 packages require a separate ZQ at pin AC11.

freescale

ICAP Classification: FCP: ___ FIUO: X PUBI: ___

Drawing Title: **MCIMX6SLEVK board**

Page Title: **LPDDR2**

Size	Document Number	Rev
C	SCH-27452 PDF: SPF-27452	B

Date: Wednesday, October 10, 2012 Sheet 7 of 16

SD1 - For Primary External Card Slot

8-bit SD

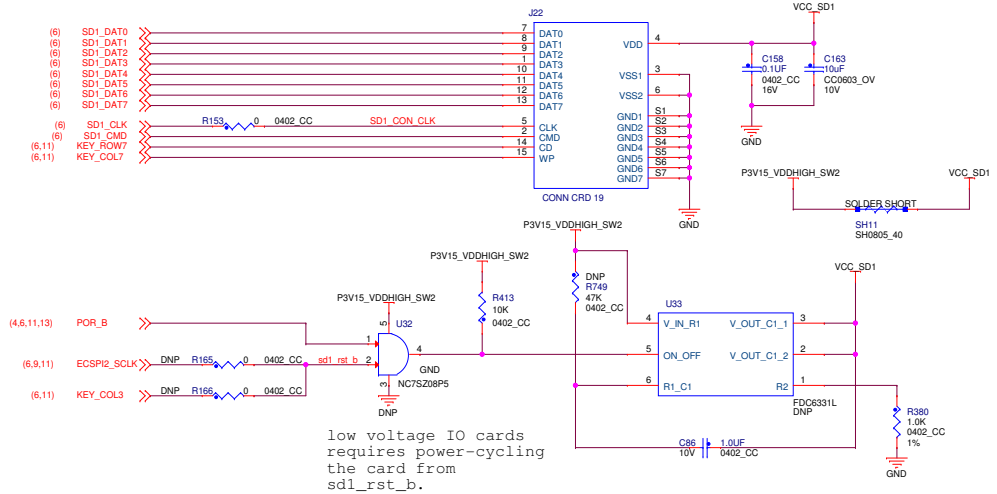

low voltage IO cards requires power-cycling the card from sd1_rst_b.

SD2 - For Boot Code

4-bit BOOT SD

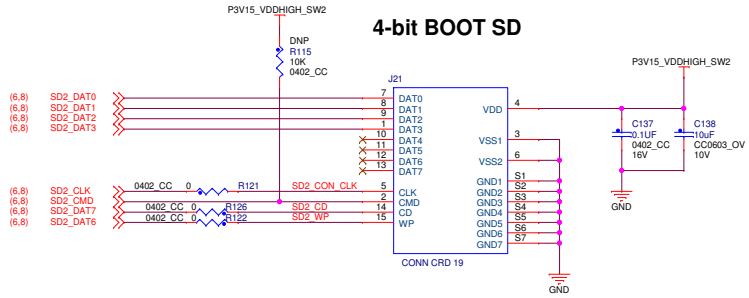

SD3 - for WiFi and SD Accessories

For WiFi

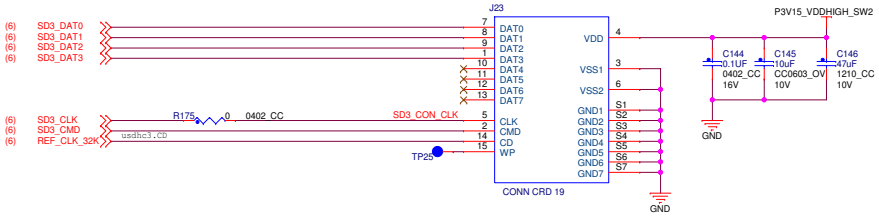

eMMC Footprint

8GB eMMC

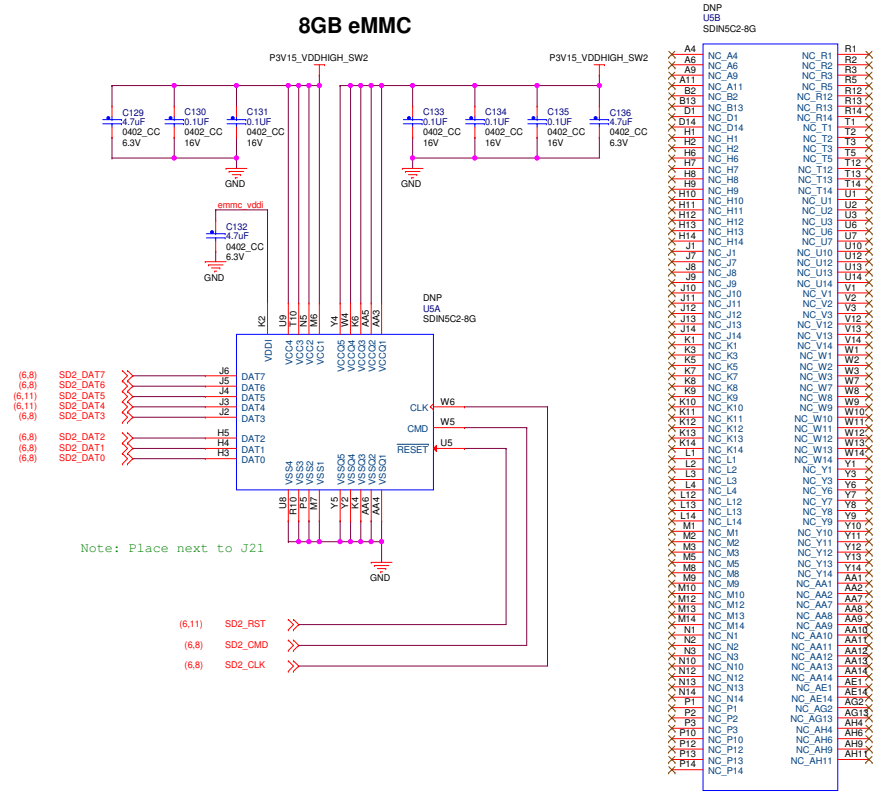

Note: Place next to J21

4MB SPI NOR FLASH

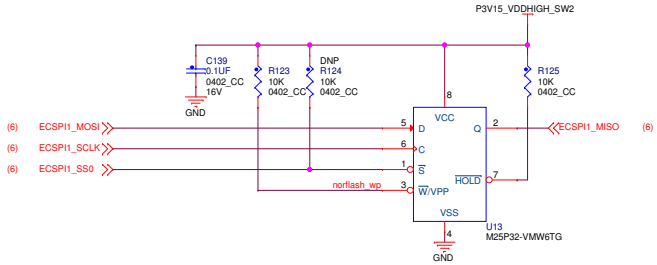

freescale

ICAP Classification:	FCP: ___	FIUO: X	PUBI: ___
Drawing Title:	MCIMX6SLEVK board		
Page Title:	EMMC, SD and SPI NOR		
Size C	Document Number SCH-27452 PDF: SPF-27452		Rev B
Date: Friday, October 12, 2012	Sheet 8 of 16		

USB Host Port

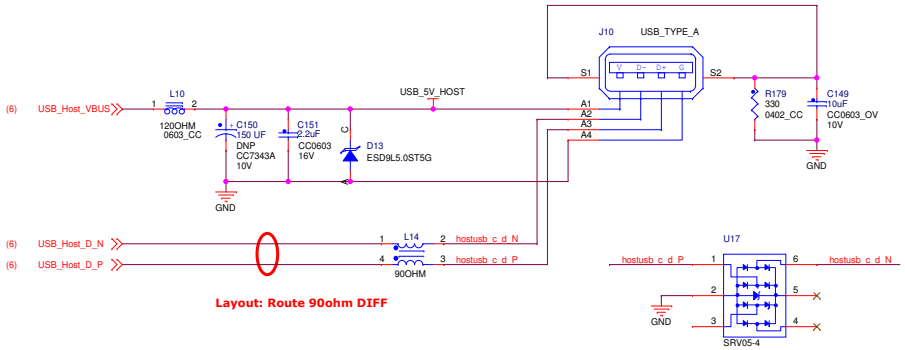

Layout: Route 90ohm DIFF

USB Boot/Host/Device Port

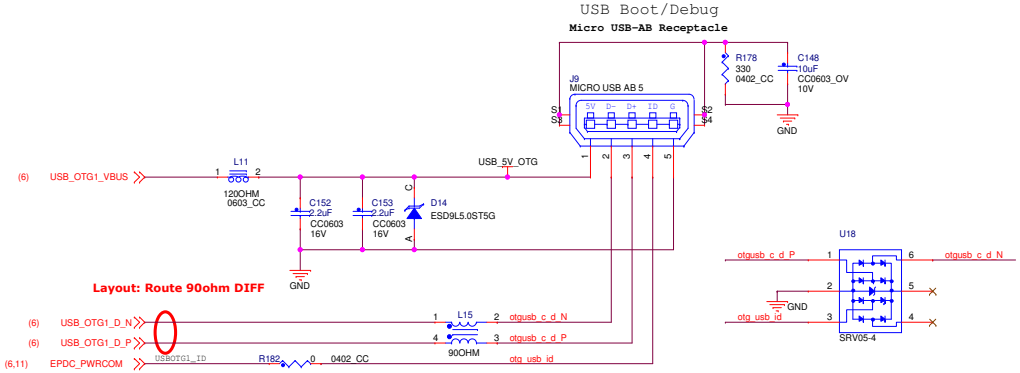

Layout: Route 90ohm DIFF

USB 5V Control

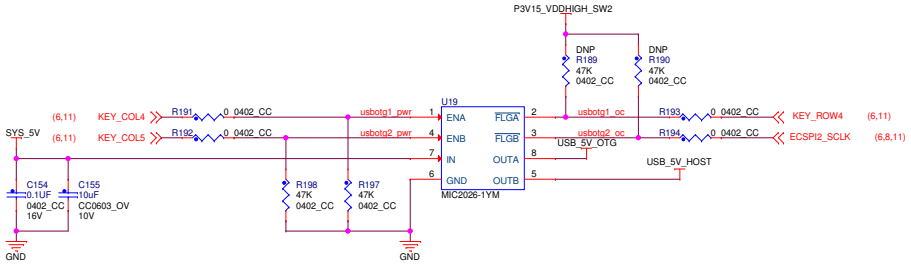

freescale

ICAP Classification: FCP: ___ FIUO: X PUBI: ___		
Drawing Title: **MCIMX6SLEVK board**		
Page Title: **USB**		
Size C	Document Number SCH-27452 PDF: SPF-27452	Rev B
Date: Monday, October 15, 2012	Sheet 9 of 16	

Audio CODEC

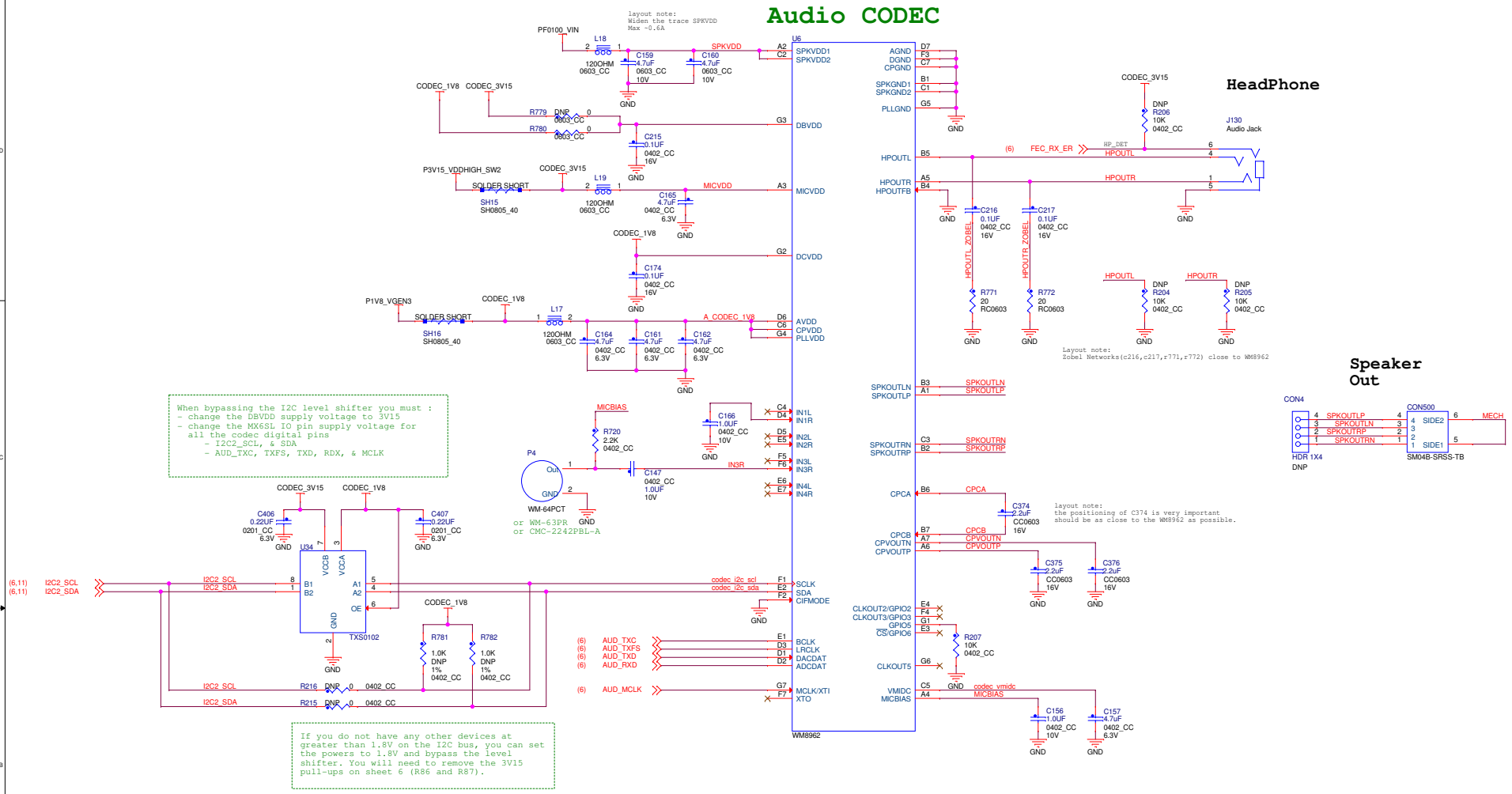

freescale

ICAP Classification:	FCP: ___	FIUO: X	PUBI: ___
Drawing Title: MCIMX6SLEVK board			
Page Title: Audio			
Size C	Document Number SCH-27452 PDF: SPF-27452		Rev B
Date: Wednesday, October 10, 2012	Sheet 10 of 16		

EPDC Expansion Port

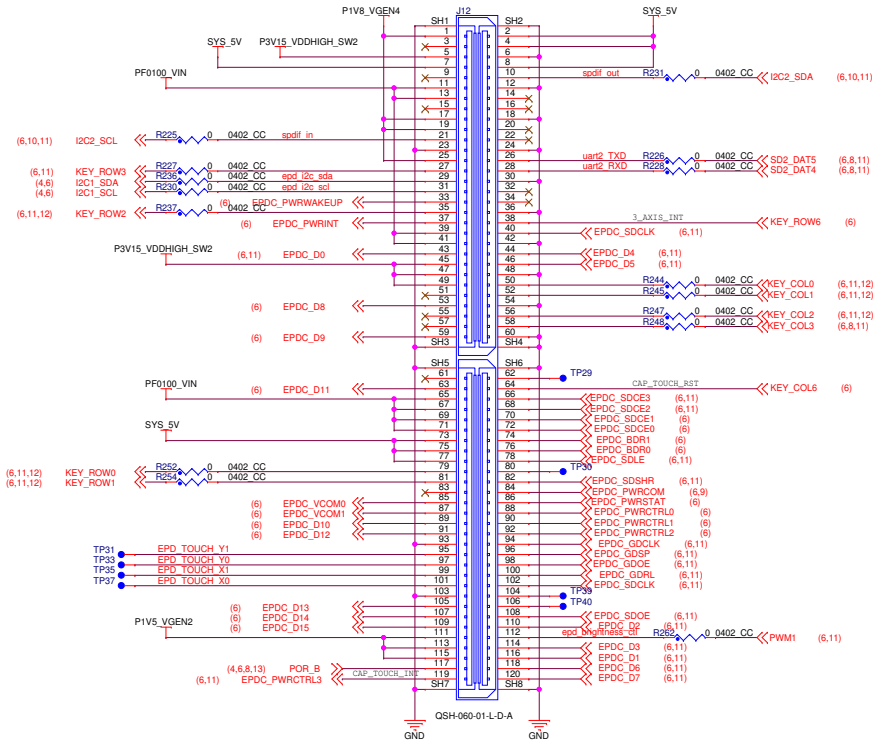

LCD Expansion Port

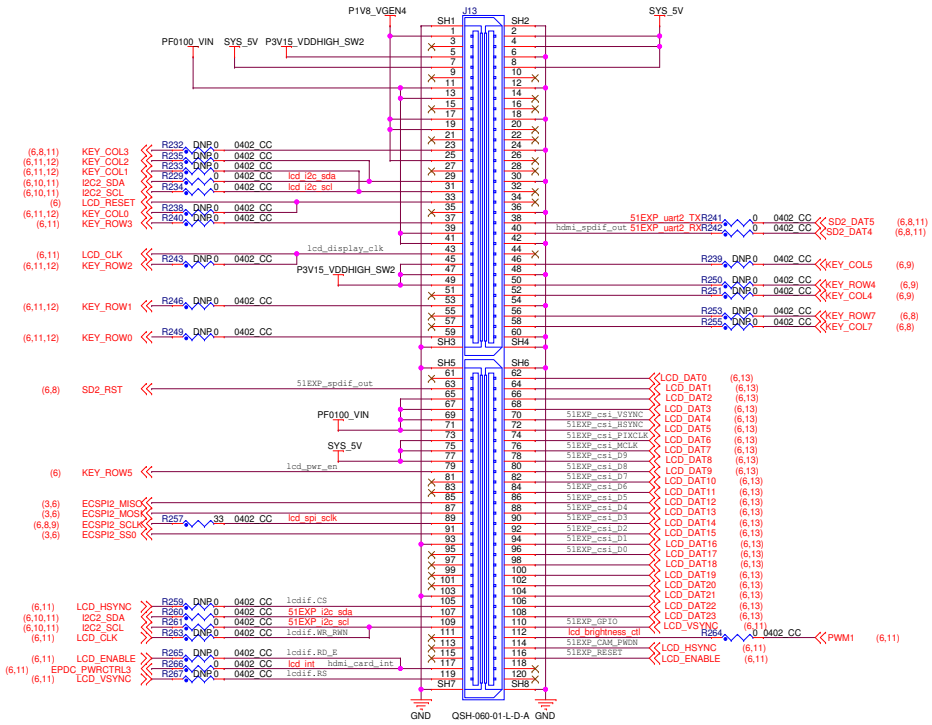

Camera Expansion Connector

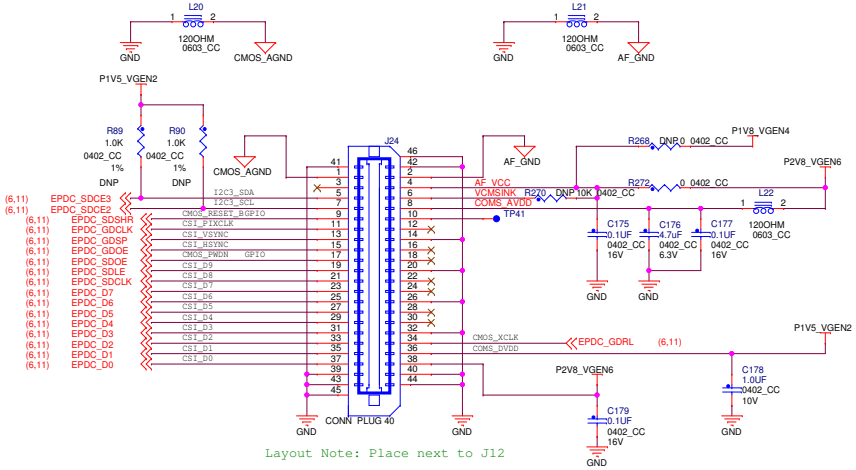

Use Omnivision OV5642 5M Pixel Sensor with this connector (not included)

Important Note:

The camera connector (J24) and the EPDC connector (J12) share the same signals and CANNOT be used at the same time.

One of these two peripherals MUST BE REMOVED when a developer wishes to use the other.

freescale

ICAP Classification:	FCP: ___	FIUO: X	PUBI: ___
Drawing Title:	MCIMX6SLEVK board		
Page Title:	Video		
Size C	Document Number SCH-27452 PDF: SPF-27452		Rev B
Date: Wednesday, October 10, 2012	Sheet 11 of 16		

Mini-PCIe HMC (3G Modem)

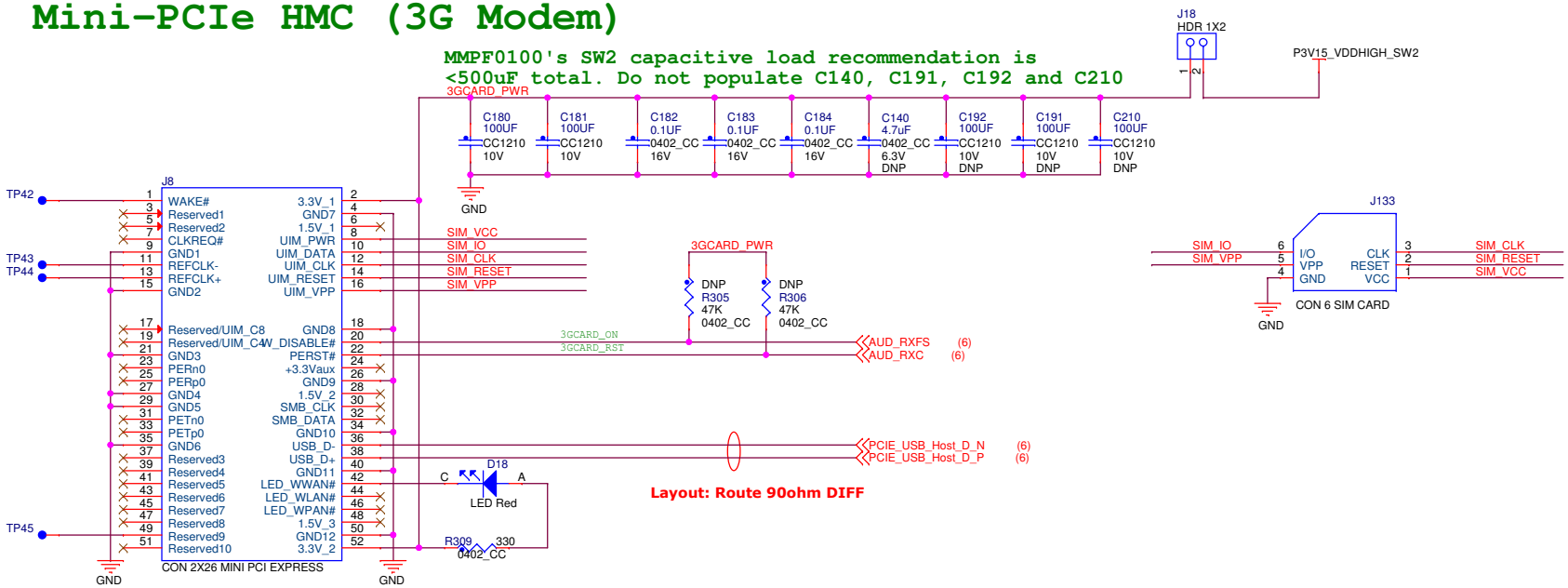

Button Matrix

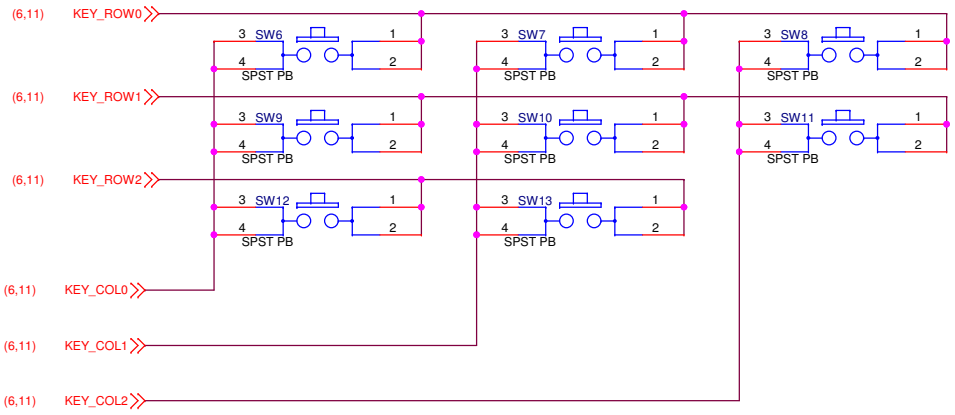

freescale

ICAP Classification: FCP:___ FIUO: X PUBI:___

Drawing Title: **MCIMX6SLEVK board**

Page Title: **Wireless**

Size	Document Number	Rev
B	SCH-27452 PDF: SPF-27452	B

Date: Thursday, October 11, 2012 | Sheet 12 of 16

Boot Strap

Boot Strap Power Control

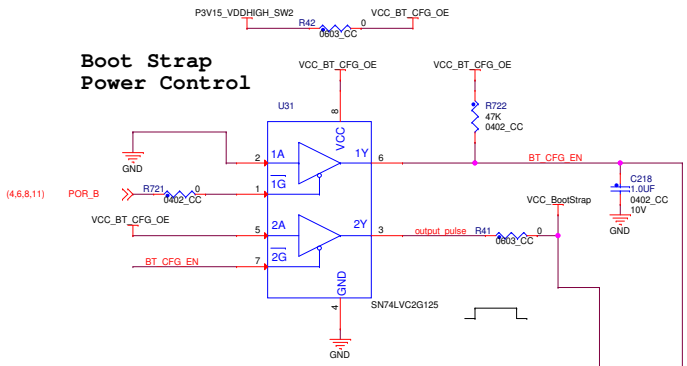

Note:
i.MX6SL reads values approximately 300uS to 1mS after reset released. Buffers are active while unit is in reset and 1ms-10ms after reset is released.

Boot Strap Primary Switches

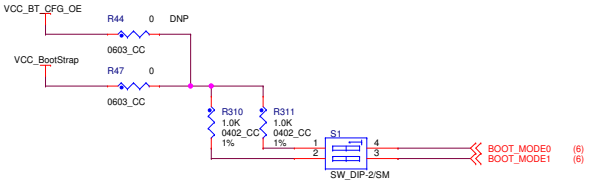

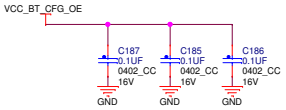

Bus isolation

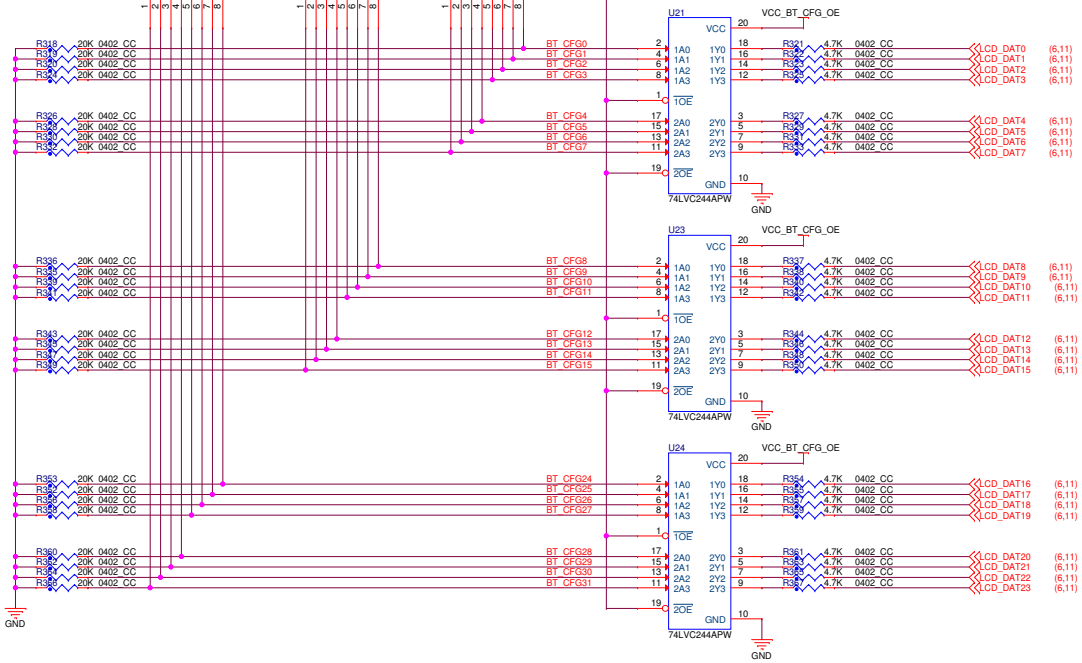

Board Mounting Holes for 4-40 Screws

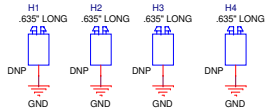

IMPORTANT NOTE :
Use non metalic or non conducting standoff to avoid board damage due to GND potential difference with chasis.

GND TEST POINTS

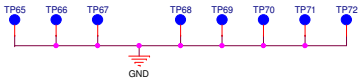

freescale

ICAP Classification:	FCP: ___	FIUO: X	PUBI: ___
Drawing Title: MCIMX6SLEVK board			
Page Title: MISC			
Size C	Document Number SCH-27452 PDF: SPF-27452		Rev B
Date: Wednesday, October 10, 2012	Sheet 13 of 16		

Debug UART2USB Converter

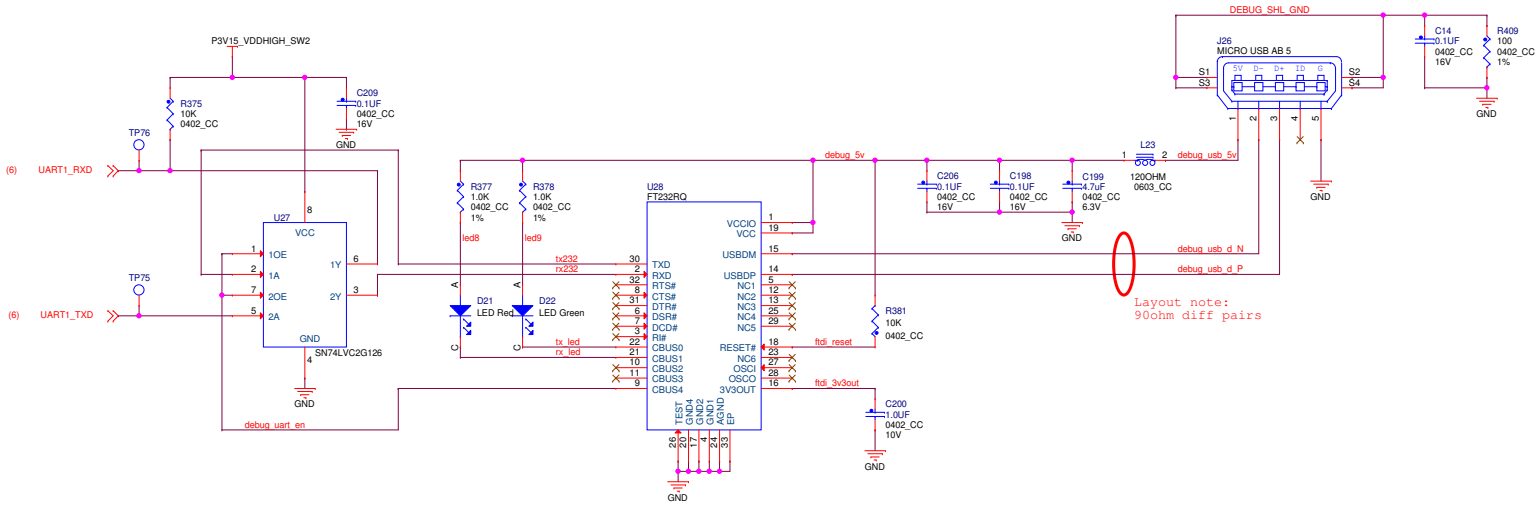

For driver installation, please refer to
http://www.ftdichip.com/Documents/InstallGuides.htm

JTAG

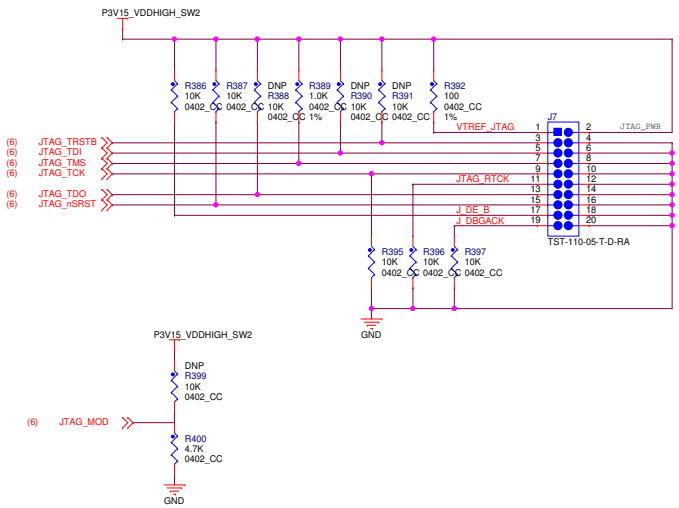

Debug LED

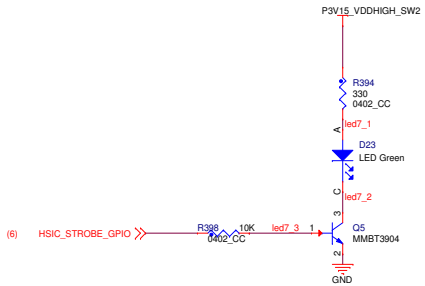

freescale

ICAP Classification: FCP: ___ FIUO: X PUBI: ___

Drawing Title: **MCIMX6SLEVK board**

Page Title: **UART & JTAG**

Size	Document Number	Rev
C	SCH-27452 PDF: SPF-27452	B

Date: Wednesday, October 10, 2012 Sheet 14 of 16

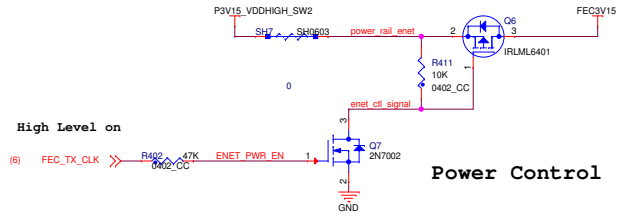

Ethernet

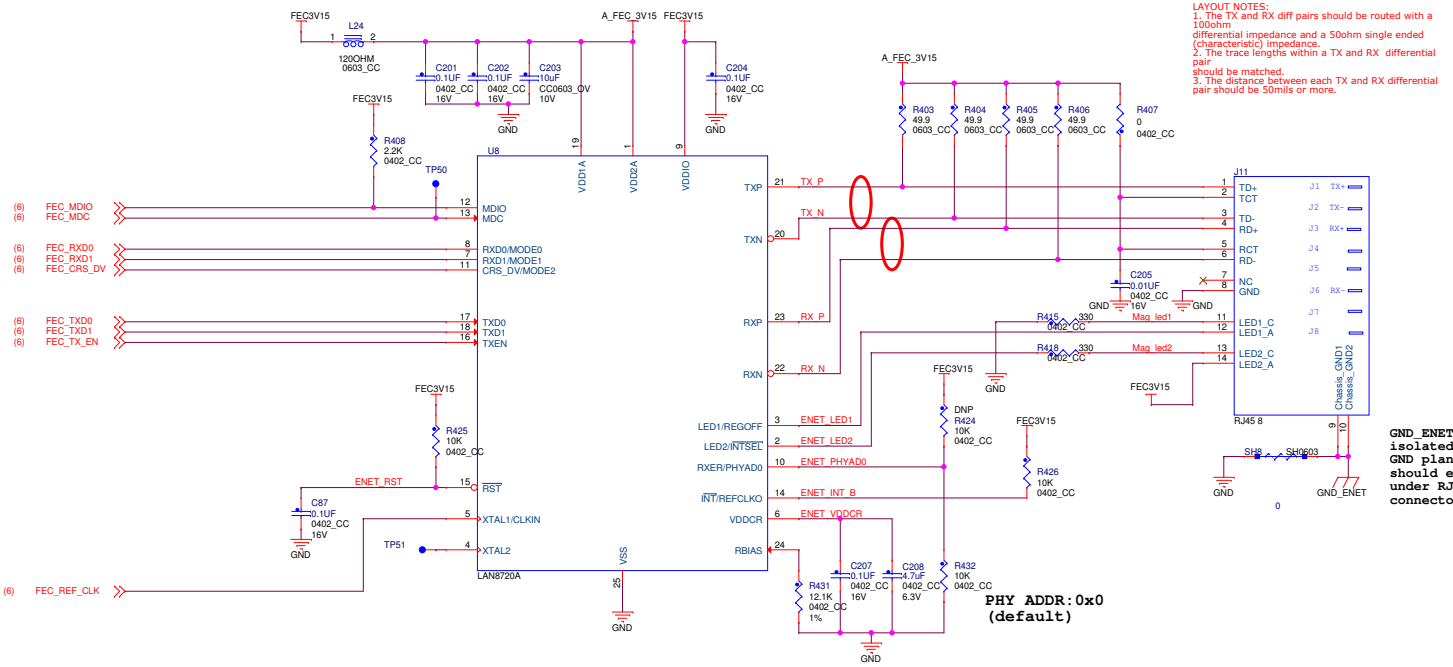

LAYOUT NOTES:
1. The TX and RX diff pairs should be routed with a 100ohm differential impedance and a 50ohm single ended (characteristic) impedance.
2. The trace lengths within a TX and RX differential pair should be matched.
3. The distance between each TX and RX differential pair should be 50mils or more.

freescale

ICAP Classification: FCP: ___ FIUO: X PUBI: ___

Drawing Title: **MCIMX6SLEVK board**

Page Title: **ENET**

Size	Document Number	Rev
C	SCH-27452 PDF: SPF-27452	B

Date: Wednesday, October 10, 2012 Sheet 15 of 16

IOMUX Table

PIN NAME	ALT0	ALT1	ALT2	ALT3	ALT4	ALT5	ALT6	ALT7
WDOG_B	wdog1.WDOG_B	wdog1.WDOG_RST_B_DEB	uart5.RI			gpio3.GPIO[18]		observe_mux.OUT[2]
HSIC_DAT	usb.H_DATA	i2c1.SCL	pwm2.PWMO	anatop.ANATOP_24M_OUT	osc32k.32K_OUT	gpio3.GPIO[19]		
HSIC_STROBE	usb.H_STROBE	i2c1.SDA	pwm2.PWMO	anatop.ANATOP_32K_OUT		gpio3.GPIO[20]		
REF_CLK_24M	anatop.ANATOP_24M_OUT	i2c3.SCL	pwm3.PWMO	anatop.USBOTG2_ID	ccm.PMIC_RDY	gpio3.GPIO[21]	usdhc3.WP	mmdc.MMDC_DEBUG[49]
REF_CLK_32K	anatop.ANATOP_32K_OUT	i2c3.SDA	pwm4.PWMO	anatop.USBOTG1_ID	usdhc1.LCTL	gpio3.GPIO[22]	usdhc3.CD	observe_mux.OUT[3]
KEY_ROW0	kpp.ROW[0]	i2c2.SCL	epit1.EPITO	usdhc2.CD	usdhc3.CD	gpio3.GPIO[23]	epit1.EPITO	observe_mux.OUT[4]
KEY_COL0	kpp.COL[0]	i2c2.SDA	weim.WEIM_DA_A[0]	usdhc3.CD		gpio3.GPIO[24]		tpsmp.HDATA[0]
KEY_ROW1	kpp.ROW[1]	ecspi4.MOSI	lcdif.DAT[1]	weim.WEIM_DA_A[1]	usdhc1.WP	gpio3.GPIO[25]		tpsmp.HDATA[1]
KEY_COL1	kpp.COL[1]	ecspi4.MISO	lcdif.DAT[2]	weim.WEIM_DA_A[2]	usdhc3.DAT4	gpio3.GPIO[26]		tpsmp.HDATA[2]
KEY_ROW2	kpp.ROW[2]	ecspi4.SCLK	lcdif.DAT[3]	weim.WEIM_DA_A[3]	usdhc3.DAT5	gpio3.GPIO[27]		tpsmp.HDATA[3]
KEY_COL2	kpp.COL[2]	audmux.AUD6_RXFS	lcdif.DAT[4]	weim.WEIM_DA_A[4]	usdhc3.DAT6	gpio3.GPIO[28]		tpsmp.HDATA[4]
KEY_ROW3	kpp.ROW[3]	audmux.AUD6_RXD	lcdif.DAT[5]	weim.WEIM_DA_A[5]	usdhc3.DAT7	gpio3.GPIO[29]		tpsmp.HDATA[5]
KEY_COL3	kpp.COL[3]	audmux.AUD6_TXC	lcdif.DAT[6]	weim.WEIM_DA_A[6]	usdhc4.DAT6	gpio3.GPIO[30]	usdhc1.RST	tpsmp.HDATA[6]
KEY_ROW4	kpp.ROW[4]	audmux.AUD6_TXD	lcdif.DAT[7]	weim.WEIM_DA_A[7]	usdhc4.DAT7	gpio3.GPIO[31]	usdhc1.VSELECT	tpsmp.HDATA[7]
KEY_COL4	kpp.COL[4]	audmux.AUD6_TXFS	lcdif.DAT[8]	weim.WEIM_DA_A[8]	usdhc4.CLK	gpio4.GPIO[0]	usb.USBOTG1_PWR	tpsmp.HDATA[8]
KEY_ROW5	kpp.ROW[5]	uart4.RXD_MUX	lcdif.DAT[9]	weim.WEIM_DA_A[9]	usdhc4.CMD	gpio4.GPIO[1]	usb.USBOTG1_OC	tpsmp.HDATA[9]
KEY_COL5	kpp.COL[5]	uart4.TXD_MUX	lcdif.DAT[10]	weim.WEIM_DA_A[10]	usdhc4.DAT0	gpio4.GPIO[2]	usb.USBOTG2_PWR	tpsmp.HDATA[10]
KEY_ROW6	kpp.ROW[6]	uart4.TXD_MUX	lcdif.DAT[11]	weim.WEIM_DA_A[11]	usdhc4.DAT1	gpio4.GPIO[3]	usb.USBOTG2_OC	tpsmp.HDATA[11]
KEY_COL7	kpp.COL[7]	uart4.RTS	lcdif.DAT[12]	weim.WEIM_DA_A[12]	usdhc4.DAT2	gpio4.GPIO[4]	usdhc3.RST	tpsmp.HDATA[12]
KEY_ROW7	kpp.ROW[7]	uart4.CTS	lcdif.DAT[13]	weim.WEIM_DA_A[13]	usdhc4.DAT3	gpio4.GPIO[5]	usdhc3.VSELECT	tpsmp.HDATA[13]
EPDC_D0	epdc.SDDO[0]	ecspi4.SS0	lcdif.DAT[14]	weim.WEIM_DA_A[14]	usdhc4.DAT4	gpio4.GPIO[6]	usdhc1.WP	tpsmp.HDATA[14]
EPDC_D1	epdc.SDDO[1]	ecspi4.MISO	lcdif.DAT[15]	weim.WEIM_DA_A[15]	usdhc4.DAT5	gpio4.GPIO[7]	usdhc1.CD	tpsmp.HDATA[15]
EPDC_D2	epdc.SDDO[2]	ecspi4.SS0	lcdif.DAT[24]	ci.D[0]	tcon.E_DATA[0]	gpio1.GPIO[8]	anatop.USBPHY1_TSTI_TX_HS_MODE	observe_mux.OUT[5]
EPDC_D3	epdc.SDDO[3]	ecspi4.SCLK	lcdif.DAT[25]	ci.D[1]	tcon.E_DATA[1]	gpio1.GPIO[9]	anatop.USBPHY1_TSTI_TX_LS_MODE	observe_mux.OUT[6]
EPDC_D4	epdc.SDDO[4]	ecspi4.SS1	lcdif.DAT[26]	ci.D[2]	tcon.E_DATA[2]	gpio1.GPIO[10]	anatop.USBPHY1_TSTI_TX_DN	tpsmp.HDATA[28]
EPDC_D5	epdc.SDDO[5]	ecspi4.SS2	lcdif.DAT[27]	ci.D[3]	tcon.E_DATA[3]	gpio1.GPIO[11]	anatop.USBPHY1_TSTI_TX_DP	tpsmp.HDATA[29]
EPDC_D6	epdc.SDDO[6]	ecspi4.SS3	lcdif.DAT[28]	ci.D[4]	tcon.E_DATA[4]	gpio1.GPIO[12]	anatop.USBPHY1_TSTI_TX_EN	tpsmp.HDATA[30]
EPDC_D7	epdc.SDDO[7]	ecspi4.RDY	lcdif.DAT[29]	ci.D[5]	tcon.E_DATA[5]	gpio1.GPIO[13]	anatop.USBPHY2_TSTO_RX_DISCON	mmdc.MMDC_DEBUG[40]
EPDC_D8	epdc.SDDO[8]	ecspi3.MOSI	lcdif.DAT[30]	ci.D[6]	tcon.E_DATA[6]	gpio1.GPIO[14]	anatop.USBPHY2_TSTO_RX_DISCON_DET	mmdc.MMDC_DEBUG[32]
EPDC_D9	epdc.SDDO[9]	ecspi3.MISO	lcdif.DAT[31]	ci.D[7]	tcon.E_DATA[7]	gpio1.GPIO[15]	anatop.USBPHY2_TSTO_RX_FS_RXD	mmdc.MMDC_DEBUG[31]
EPDC_D10	epdc.SDDO[10]	ecspi3.SS0	epdc.PWRCTRL[0]	weim.WEIM_A[16]	tcon.E_DATA[8]	gpio1.GPIO[16]	usdhc4.VSELECT	mmdc.MMDC_DEBUG[30]
EPDC_D11	epdc.SDDO[11]	ecspi3.SCLK	epdc.PWRCTRL[1]	weim.WEIM_A[17]	tcon.E_DATA[9]	gpio1.GPIO[17]	usdhc4.WP	mmdc.MMDC_DEBUG[29]
EPDC_D12	epdc.SDDO[12]	uart2.TXD_MUX	epdc.PWRCTRL[2]	weim.WEIM_A[18]	tcon.E_DATA[10]	gpio1.GPIO[18]	usdhc4.CD	mmdc.MMDC_DEBUG[28]
EPDC_D13	epdc.SDDO[13]	uart2.TXD_MUX	epdc.PWRCTRL[3]	weim.WEIM_A[19]	tcon.E_DATA[11]	gpio1.GPIO[19]	ecspi3.SS1	mmdc.MMDC_DEBUG[27]
EPDC_D14	epdc.SDDO[14]	uart2.RTS	epdc.PWRSTAT	weim.WEIM_A[20]	tcon.E_DATA[12]	gpio1.GPIO[20]	ecspi3.SS2	mmdc.MMDC_DEBUG[26]
EPDC_D15	epdc.SDDO[15]	uart2.CTS	epdc.PWRWAKE	weim.WEIM_A[21]	tcon.E_DATA[13]	gpio1.GPIO[21]	ecspi3.SS3	mmdc.MMDC_DEBUG[25]
EPDC_SDCLK	epdc.SDCLK	ecspi2.MOSI	i2c2.SCL	weim.WEIM_A[22]	tcon.E_DATA[14]	gpio1.GPIO[22]	ecspi3.RDY	mmdc.MMDC_DEBUG[24]
EPDC_SDLE	epdc.SDLE	ecspi2.MISO	i2c2.SDA	weim.WEIM_A[23]	tcon.E_DATA[15]	gpio1.GPIO[23]	anatop.USBPHY2_TSTO_RX_HS_RXD	mmdc.MMDC_DEBUG[23]
EPDC_SDCE	epdc.SDOE	ecspi2.SS0	ci.D[0]	tcon.CS	tcon.CS	gpio1.GPIO[24]	anatop.USBPHY2_TSTO_RX_HS_SQUELCH	mmdc.MMDC_DEBUG[22]
EPDC_SDSHR	epdc.SDSHR	ecspi2.SCLK	ci.D[1]	epdc.SDCE[4]	tcon.XDIOR	gpio1.GPIO[25]	anatop.USBPHY2_TSTO_PLL_CLK200DIV	mmdc.MMDC_DEBUG[21]
EPDC_SDCE0	epdc.SDCE[0]	ecspi2.SS1	pwm3.PWMO	weim.WEIM_CS[2]	tcon.YCKR	gpio1.GPIO[26]	anatop.USBPHY1_TSTO_RX_DISCON_DET	mmdc.MMDC_DEBUG[20]
EPDC_SDCE1	epdc.SDCE[1]	wdog2.WDOG_B	pwm4.PWMO	weim.WEIM_BA	tcon.YCKB	gpio1.GPIO[27]	anatop.USBPHY1_TSTO_PLL_CLK200DIV	mmdc.MMDC_DEBUG[19]
EPDC_SDCE2	epdc.SDCE[2]	i2c1.SCL	pwm2.PWMO	weim.WEIM_EB[0]	tcon.YDIOR	gpio1.GPIO[28]	anatop.USBPHY1_TSTO_RX_FS_RXD	mmdc.MMDC_DEBUG[18]
EPDC_SDCE3	epdc.SDCE[3]	i2c1.SDA	pwm2.PWMO	weim.WEIM_EB[1]	tcon.YDIOUR	gpio1.GPIO[29]	anatop.USBPHY1_TSTO_RX_HS_RXD	mmdc.MMDC_DEBUG[17]
EPDC_GDCLK	epdc.GDCLK	ecspi2.SS2	ci.PIXCLK	weim.WEIM_CS[0]	tcon.YDIODR	gpio1.GPIO[30]	anatop.USBPHY1_TSTO_RX_SQUELCH	mmdc.MMDC_DEBUG[16]
EPDC_GDOE	epdc.GDOE	ecspi2.SS3	tcon.YCKR	ci.HSYNC	tcon.YCKL	gpio1.GPIO[31]	usdhc2.RST	mmdc.MMDC_DEBUG[15]
EPDC_GDRL	epdc.GDRL	ecspi2.RDY	tcon.YDIOR	ci.MCLK	tcon.YDIOL	gpio2.GPIO[0]	usdhc2.VSELECT	mmdc.MMDC_DEBUG[14]
EPDC_GDSP	epdc.GDSP	pwm4.PWMO	tcon.YDIOUR	ci.VSYNC	tcon.YDIOUL	gpio2.GPIO[1]	usdhc2.WP	mmdc.MMDC_DEBUG[13]
EPDC_VCOM0	epdc.VCOM[0]	audmux.AUD5_RXFS	uart3.RXD_MUX	weim.WEIM_A[24]	tcon.YDIODL	gpio2.GPIO[2]	usdhc2.CD	mmdc.MMDC_DEBUG[12]
EPDC_VCOM1	epdc.VCOM[1]	audmux.AUD5_RXD	uart3.TXD_MUX	weim.WEIM_A[25]	tcon.VCOM[1]	gpio2.GPIO[3]	epdc.SDCE[5]	mmdc.MMDC_DEBUG[11]
EPDC_BDR0	epdc.BDR[0]	usdhc4.CLK	uart3.RTS	weim.WEIM_A[26]	tcon.IC	gpio2.GPIO[4]	epdc.SDCE[6]	mmdc.MMDC_DEBUG[10]
EPDC_BDR1	epdc.BDR[1]	usdhc4.CMD	uart3.CTS	weim.WEIM_CRE	tcon.UD	gpio2.GPIO[5]	epdc.SDCE[7]	mmdc.MMDC_DEBUG[9]
EPDC_PWRCTRL0	epdc.PWRCTRL[0]	audmux.AUD5_RXC	lcdif.DAT[16]	weim.WEIM_RW	tcon.YCKL	gpio2.GPIO[6]	epdc.SDCE[8]	mmdc.MMDC_DEBUG[8]
EPDC_PWRCTRL1	epdc.PWRCTRL[1]	audmux.AUD5_TXFS	lcdif.DAT[17]	weim.WEIM_OE	tcon.YDIOL	gpio2.GPIO[7]	usdhc4.RST	mmdc.MMDC_DEBUG[7]
EPDC_PWRCTRL2	epdc.PWRCTRL[2]	audmux.AUD5_TXD	lcdif.DAT[18]	weim.WEIM_CS[0]	tcon.YDIOUL	gpio2.GPIO[8]	usdhc4.VSELECT	mmdc.MMDC_DEBUG[6]
EPDC_PWRCTRL3	epdc.PWRCTRL[3]	audmux.AUD5_TXC	lcdif.DAT[19]	weim.WEIM_CS[1]	tcon.YDIODL	gpio2.GPIO[9]	usdhc4.WP	mmdc.MMDC_DEBUG[5]
EPDC_PWRCOM	epdc.PWRCOM	usdhc4.DAT0	lcdif.DAT[20]	weim.WEIM_BCLK	tcon.YDIODL	gpio2.GPIO[10]	usdhc4.CD	mmdc.MMDC_DEBUG[4]
EPDC_PWRINT	epdc.PWRINT	usdhc4.DAT1	lcdif.DAT[21]	ACLK_FREERUN	anatop.USBOTG1_ID	gpio2.GPIO[11]	usdhc3.RST	mmdc.MMDC_DEBUG[3]
EPDC_PWRSTAT	epdc.PWRSTAT	usdhc4.DAT2	lcdif.DAT[22]	weim.WEIM_WAIT	kitten.EVENT1	gpio2.GPIO[12]	usdhc3.VSELECT	mmdc.MMDC_DEBUG[2]
EPDC_PWRWAKEUP	epdc.PWRWAKEUP	usdhc4.DAT3	lcdif.DAT[23]	weim.WEIM_BCLK_B	pwm1.PWMO	gpio2.GPIO[13]	usdhc3.WP	mmdc.MMDC_DEBUG[1]
LCD_CLK	lcdif.CLK	usdhc4.DAT4	lcdif.WR_RWN	weim.WEIM_BW	pwm4.PWMO	gpio2.GPIO[14]	usdhc3.CD	mmdc.MMDC_DEBUG[0]
LCD_ENABLE	lcdif.ENABLE	usdhc4.DAT5	lcdif.RD_E	weim.WEIM_OE	uart2.RXD_MUX	gpio2.GPIO[15]	src.EARLY_RST	tpsmp.HTRANS[1]
LCD_HSYNC	lcdif.HSYNC	usdhc4.DAT6	lcdif.CS	weim.WEIM_CS[0]	uart2.TXD_MUX	gpio2.GPIO[16]	ocotp.clr_wrapper.FUSE_LATCHED	tpsmp.HTRANS[0]
LCD_VSYNC	lcdif.VSYNC	usdhc4.DAT7	lcdif.RS	weim.WEIM_CS[1]	uart2.RTS	gpio2.GPIO[17]	kitten.TRCTL	tpsmp.HDATA[16]
LCD_RESET	lcdif.RESET	weim.WEIM_DTACK_B	lcdif.BUSY	weim.WEIM_WAIT	uart2.CTS	gpio2.GPIO[18]	kitten.TRCTL	tpsmp.HDATA[17]
LCD_DAT0	lcdif.DAT[0]	ecspi1.MOSI	anatop.USBOTG2_ID	pwm1.PWMO	uart5.RTS	gpio2.GPIO[19]	ccm.PMIC_RDY	tpsmp.HDATA[18]
LCD_DAT1	lcdif.DAT[1]	ecspi1.MISO	anatop.USBOTG1_ID	pwm2.PWMO	audmux.AUD4_RXFS	gpio2.GPIO[20]	kitten.TRACE[0]	src.BT_CFG[0]
LCD_DAT2	lcdif.DAT[2]	ecspi1.SS0	epit2.EPITO	pwm3.PWMO	audmux.AUD4_RXC	gpio2.GPIO[21]	kitten.TRACE[1]	src.BT_CFG[1]
LCD_DAT3	lcdif.DAT[3]	ecspi1.SCLK	uart5.DSR	pwm4.PWMO	audmux.AUD4_RXD	gpio2.GPIO[22]	kitten.TRACE[2]	src.BT_CFG[2]
LCD_DAT4	lcdif.DAT[4]	ecspi1.SS1	cai.VSYNC	wdog2.WDOG_RST_B_DEB	audmux.AUD4_TXFS	gpio2.GPIO[23]	kitten.TRACE[3]	src.BT_CFG[3]
LCD_DAT5	lcdif.DAT[5]	ecspi1.SS2	cai.HSYNC	weim.WEIM_D[0]	audmux.AUD4_TXD	gpio2.GPIO[24]	kitten.TRACE[4]	src.BT_CFG[4]
LCD_DAT6	lcdif.DAT[6]	ecspi1.SS3	cai.MCLK	weim.WEIM_D[1]	audmux.AUD4_TXC	gpio2.GPIO[25]	kitten.TRACE[5]	src.BT_CFG[5]
LCD_DAT7	lcdif.DAT[7]	ecspi1.RDY	cai.D[9]	weim.WEIM_D[2]	anatop.AUDIO_CLK_OUT	gpio2.GPIO[26]	kitten.TRACE[6]	src.BT_CFG[6]
LCD_DAT8	lcdif.DAT[8]	kpp.COL[0]	cai.D[8]	weim.WEIM_D[3]	ecspi2.SCLK	gpio2.GPIO[27]	kitten.TRACE[7]	src.BT_CFG[7]
LCD_DAT9	lcdif.DAT[9]	kpp.ROW[0]	cai.D[7]	weim.WEIM_D[4]	ecspi2.MOSI	gpio2.GPIO[28]	kitten.TRACE[8]	src.BT_CFG[8]
LCD_DAT10	lcdif.DAT[10]	kpp.COL[1]	cai.D[6]	weim.WEIM_D[5]	ecspi2.MISO	gpio2.GPIO[29]	kitten.TRACE[9]	src.BT_CFG[9]
LCD_DAT11	lcdif.DAT[11]	kpp.ROW[1]	cai.D[5]	weim.WEIM_D[6]	uart5.CTS	gpio2.GPIO[30]	kitten.TRACE[10]	src.BT_CFG[10]
LCD_DAT12	lcdif.DAT[12]	kpp.COL[2]	cai.D[4]	weim.WEIM_D[7]	uart5.RTS	gpio2.GPIO[31]	kitten.TRACE[11]	src.BT_CFG[11]
LCD_DAT13	lcdif.DAT[13]	kpp.ROW[2]	cai.D[3]	weim.WEIM_D[8]	uart5.CTS	gpio3.GPIO[0]	kitten.TRACE[12]	src.BT_CFG[12]
LCD_DAT14	lcdif.DAT[14]	kpp.COL[3]	cai.D[2]	weim.WEIM_D[9]	uart5.RXD_MUX	gpio3.GPIO[1]	kitten.TRACE[13]	src.BT_CFG[13]
LCD_DAT15	lcdif.DAT[15]	kpp.ROW[3]	cai.D[1]	weim.WEIM_D[10]	uart5.TXD_MUX	gpio3.GPIO[2]	kitten.TRACE[14]	src.BT_CFG[14]
LCD_DAT16	lcdif.DAT[16]	kpp.COL[4]	cai.D[0]	weim.WEIM_D[11]	i2c2.SCL	gpio3.GPIO[3]	kitten.TRACE[15]	src.BT_CFG[15]
LCD_DAT17	lcdif.DAT[17]	kpp.ROW[4]	cai.D[15]	weim.WEIM_D[12]	i2c2.SDA	gpio3.GPIO[4]	kitten.TRACE[16]	src.BT_CFG[16]
LCD_DAT18	lcdif.DAT[18]	kpp.COL[5]	cai.D[14]	weim.WEIM_D[13]	gpt.CAPIN1	gpio3.GPIO[5]	kitten.TRACE[17]	src.BT_CFG[17]
LCD_DAT19	lcdif.DAT[19]	kpp.ROW[5]	cai.D[13]	weim.WEIM_D[14]	gpt.CAPIN2	gpio3.GPIO[6]	kitten.TRACE[18]	src.BT_CFG[18]
LCD_DAT20	lcdif.DAT[20]	kpp.COL[6]	cai.D[12]	weim.WEIM_D[15]	gpt.CMPOUT1	gpio3.GPIO[7]	kitten.TRACE[19]	src.BT_CFG[19]
LCD_DAT21	lcdif.DAT[21]	kpp.ROW[6]	cai.D[11]	weim.WEIM_EB[2]	gpt.CMPOUT2	gpio3.GPIO[8]	kitten.TRACE[20]	src.BT_CFG[20]
LCD_DAT22	lcdif.DAT[22]	kpp.COL[7]	cai.D[10]	weim.WEIM_EB[3]	gpt.CMPOUT3	gpio3.GPIO[9]	kitten.TRACE[21]	src.BT_CFG[21]
LCD_DAT23	lcdif.DAT[23]	kpp.ROW[7]		fec.MDIO	gpt.CLKIN	gpio3.GPIO[10]	kitten.TRACE[22]	src.BT_CFG[22]
AUD_RXFS	audmux.AUD3_RXFS	i2c1.SCL		fec.TX_CLK	i2c3.SCL	gpio3.GPIO[11]	kitten.TRACE[23]	src.BT_CFG[23]
AUD_RXC	audmux.AUD3_RXC	i2c1.SDA		fec.RX_CLK	i2c3.SDA	gpio1.GPIO[0]	ecspi3.SS0	pl301_aim_mxi4_per1.HPROT[1]
AUD_RXD	audmux.AUD3_RXD	ecspi3.MOSI		fec.RX_DV	usdhc1.LCTL	gpio1.GPIO[1]	ecspi3.SS1	pl301_aim_mxi4_per1.HBEADYOUT
AUD_TXC	audmux.AUD3_TXC	ecspi3.MISO		fec.RX_ER	usdhc2.LCTL	gpio1.GPIO[2]	src.INT_BOOT	pl301_aim_mxi4_per1.HRESP
AUD_TXFS	audmux.AUD3_TXFS	ecspi3.SS0		fec.RDATA[1]	usdhc3.LCTL	gpio1.GPIO[3]	src.SYSTEM_RST	tpsmp.HDATA[24]
AUD_TXD	audmux.AUD3_TXD	ecspi3.SCLK		fec.TDATA[1]	usdhc4.LCTL	gpio1.GPIO[4]	anatop.ANATOP_TESTI[0]	tpsmp.HDATA[25]
AUD_MCLK	audmux.AUDIO_CLK_OUT	pwm4.PWMO		fec.MDC	wdog2.WDOG_RST_B_DEB	gpio1.GPIO[5]	anatop.ANATOP_TESTI[1]	tpsmp.HDATA[26]
UART1_RXD	uart1.RXD_MUX	pwm1.PWMO		fec.COL	uart5.RXD_MUX	gpio1.GPIO[6]	spdif.SPDIF_EXT_CLK	tpsmp.HDATA[27]
UART1_TXD	uart1.TXD_MUX	pwm2.PWMO		fec.RX_CLK	uart5.TXD_MUX	gpio3.GPIO[16]	anatop.ANATOP_TESTI[2]	tpsmp.CLK
I2C1_SCL	i2c1.SCL	uart1.RTS		fec.RDATA[0]	usdhc1.RST	gpio3.GPIO[17]	anatop.ANATOP_TESTI[3]	uart5.DCD
I2C1_SDA	i2c1.SDA	uart1.CTS		fec.TDATA[0]	usdhc2.VSELECT	gpio3.GPIO[12]	ecspi1.SS1	pl301_aim_mxi4_per1.HSIZE[0]
I2C2_SCL	i2c2.SCL	ecspi1.SS3		fec.TX_ER	usdhc3.VSELECT	gpio3.GPIO[13]	ecspi1.RDY	pl301_aim_mxi4_per1.HSIZE[1]
I2C2_SDA	i2c2.SDA	audmux.AUD4_RXFS		fec.REF_OUT	usdhc3.CD	gpio3.GPIO[14]	src.BOOT_CFG[7]	pl301_aim_mxi4_per1.HWRITE
ECSPI1_SCLK	ecspi1.SCLK	audmux.AUD4_RXC		epdc.VCOM[0]	usdhc1.RST	gpio3.GPIO[15]	anatop.ANATOP_TESTO[0]	tpsmp.HDATA[18]
ECSPI1_MOSI	ecspi1.MOSI	audmux.AUD4_RXD		epdc.VCOM[1]	usdhc2.VSELECT	gpio4.GPIO[8]	usb.USBOTG2_OC	tpsmp.HDATA[19]
ECSPI1_MISO	ecspi1.MISO	audmux.AUD4_TXFS		epdc.BDR[0]	usdhc2.CD	gpio4.GPIO[9]	ccm.PLL1_BYP	tpsmp.HDATA[20]
ECSPI1_SS0	ecspi1.SS0	audmux.AUD4_TXD		epdc.BDR[1]	usdhc3.RST	gpio4.GPIO[10]	ccm.PLL2_BYP	pl301_aim_mxi4_per1.HADDR[23]
ECSPI2_SCLK	ecspi2.SCLK	spdif.SPDIF_EXT_CLK		ca.PIXCLK	usdhc3.VSELECT	gpio4.GPIO[11]	usb.USBOTG2_PWR	tpsmp.HDATA[21]
ECSPI2_MOSI	ecspi2.MOSI	sdma.SDMA_EXT_EVENT[1]		ca.HSYNC	usdhc1.VSELECT	gpio4.GPIO[12]	usb.USBOTG2_OC	anatop.ANATOP_TESTO[1]	tpsmp.HDATA[22]
ECSPI2_MISO	ecspi2.MISO	sdma.SDMA_EXT_EVENT[0]		ca.MCLK	usdhc1.WP	gpio4.GPIO[13]	usb.USBOTG1_OC	pl301_aim_mxi4_per1.HADDR[24]
ECSPI2_SS0	ecspi2.SS0	ecspi1.SS3		ca.VSYNC	usdhc1.CD	gpio4.GPIO[14]	usb.USBOTG1_PWR	tpsmp.HDATA[23]
SD1_CLK	usdhc1.CLK	ecspi1.RDY		epdc.SDCE[3]	usdhc4.RST	gpio4.GPIO[15]	usb.USBOTG1_PWR	pl301_aim_mxi4_per1.HADDR[25]
SD1_CMD	usdhc1.CMD	fec.TX_CLK		epdc.SDCE[2]	mshc.BS	gpio5.GPIO[0]	anatop.ANATOP_TESTO[2]	pl301_aim_mxi4_per1.HADDR[26]
SD1_DAT0	usdhc1.DAT0	fec.RX_ER		epdc.SDCE[1]	mshc.DATA[0]	gpio5.GPIO[1]	anatop.ANATOP_TESTO[3]	pl301_aim_mxi4_per1.HADDR[27]
SD1_DAT1	usdhc1.DAT1	fec.RX_DV		epdc.SDCE[0]	mshc.DATA[1]	gpio5.GPIO[2]	anatop.ANATOP_TESTO[4]	pl301_aim_mxi4_per1.HADDR[28]
SD1_DAT2	usdhc1.DAT2	fec.RDATA[1]		epdc.SDCLK	mshc.DATA[2]	gpio5.GPIO[3]	anatop.ANATOP_TESTO[5]	pl301_aim_mxi4_per1.HADDR[29]
SD1_DAT3	usdhc1.DAT3	fec.TDATA[1]		epdc.SDLE	mshc.DATA[3]	gpio5.GPIO[4]	anatop.ANATOP_TESTO[6]	pl301_aim_mxi4_per1.HADDR[30]
SD1_DAT4	usdhc1.DAT4	fec.MDIO		epdc.SDCLKN	uart4.TXD_MUX	gpio5.GPIO[5]	anatop.ANATOP_TESTO[7]	pl301_aim_mxi4_per1.HADDR[31]
SD1_DAT5	usdhc1.DAT5	fec.RDATA[0]		epdc.SDOED	uart4.RTS	gpio5.GPIO[6]	anatop.ANATOP_TESTO[8]	pl301_aim_mxi4_per1.HPROT[3]
SD1_DAT6	usdhc1.DAT6	fec.TX_EN		epdc.SDOEZ	uart4.CTS	gpio5.GPIO[7]	anatop.ANATOP_TESTO[9]	pl301_aim_mxi4_per1.HPROT[2]
SD1_DAT7	usdhc1.DAT7	fec.TDATA[1]		ccm.PMIC_RDY	uart4.CTS	gpio5.GPIO[8]	anatop.ANATOP_TESTO[10]	pl301_aim_mxi4_per1.HMASTLOCK
SD2_WP	usdhc2.WP	fec.REF_OUT		wdog2.WDOG_B	usdhc1.CD	gpio5.GPIO[9]	anatop.ANATOP_TESTO[11]	pl301_aim_mxi4_per1.HPROT[1]
SD2_CLK	usdhc2.CLK	audmux.AUD4_RXFS		spdif.OUT1	osc32k.32K_OUT	gpio5.GPIO[10]	anatop.ANATOP_TESTO[12]	pl301_aim_mxi4_per1.HPROT[0]
SD2_CMD	usdhc2.CMD	audmux.AUD4_RXC		ecspi1.SCLK	epit1.EPITO	gpio5.GPIO[4]	anatop.ANATOP_TESTO[13]	pl301_aim_mxi4_per1.HADDR[21]
SD2_DAT0	usdhc2.DAT0	audmux.AUD4_RXD		ecspi1.MOSI	uart5.RTS	gpio5.GPIO[11]	anatop.ANATOP_TESTO[14]	pl301_aim_mxi4_per1.HPROT[0]
SD2_DAT1	usdhc2.DAT1	audmux.AUD4_TXC		ecspi1.MISO	uart5.CTS	gpio4.GPIO[30]	anatop.ANATOP_TESTO[15]	pl301_aim_mxi4_per1.HBURST[1]
SD2_DAT2	usdhc2.DAT2	audmux.AUD4_TXFS		fec.TCL	usdhc2.RST	gpio5.GPIO[3]	mmdc.MMDC_DEBUG[39]	pl301_aim_mxi4_per1.HADDR[22]
SD2_DAT3	usdhc2.DAT3	audmux.AUD4_TXD		fec.RX_CLK	usdhc3.RST	gpio4.GPIO[28]	mmdc.MMDC_DEBUG[38]	pl301_aim_mxi4_per1.HBURST[0]
SD2_CD_B	usdhc2.CD_B	uart2.RXD_MUX		uart2.RXD_MUX	usdhc3.VSELECT	gpio4.GPIO[21]	mmdc.MMDC_DEBUG[37]	pl301_aim_mxi4_per1.HADDR[20]
SD2_WP	usdhc2.WP	uart2.TXD_MUX		uart2.TXD_MUX	spdif.IN1	gpio4.GPIO[20]	mmdc.MMDC_DEBUG[36]	pl301_aim_mxi4_per1.HADDR[19]
SD2_DAT6	usdhc2.DAT6	uart2.RTS		uart2.RTS	usdhc2.WP	gpio4.GPIO[29]	mmdc.MMDC_DEBUG[34]	pl301_aim_mxi4_per1.HADDR[18]
SD2_DAT7	usdhc2.DAT7	uart2.CTS		uart2.CTS	usdhc2.CD	gpio5.GPIO[0]	mmdc.MMDC_DEBUG[33]	pl301_aim_mxi4_per1.HADDR[17]
SD2_CLK	usdhc3.CLK	kpp.COL[5]		kpp.COL[5]	wdog1.WDOG_RST_B_DEB	gpio5.GPIO[18]	usb.USBOTG1_PWR	pl301_aim_mxi4_per1.HADDR[13]
SD2_CMD	usdhc3.CMD	kpp.ROW[5]		kpp.ROW[5]	anatop.USBOTG2_ID	gpio5.GPIO[19]	usb.USBOTG2_PWR	pl301_aim_mxi4_per1.HADDR[15]
SD2_DAT0	usdhc3.DAT0	kpp.COL[6]		kpp.COL[6]	anatop.USBOTG1_ID	gpio5.GPIO[21]	xtalosc.OSC_EN	pl301_aim_mxi4_per1.HADDR[14]
SD2_DAT1	usdhc3.DAT1	kpp.ROW[6]		kpp.ROW[6]	usdhc1.VSELECT	gpio5.GPIO[20]	sjc.DE_B	pl301_aim_mxi4_per1.HADDR[17]
SD2_DAT2	usdhc3.DAT2	kpp.COL[7]		kpp.COL[7]	epit1.EPITO	gpio5.GPIO[16]	usb.USBOTG2_OC	pl301_aim_mxi4_per1.HADDR[14]
SD2_DAT3	usdhc3.DAT3	kpp.ROW[7]		kpp.ROW[7]	gpt.CAPIN2	gpio5.GPIO[17]	usb.USBOTG1_OC	pl301_aim_mxi4_per1.HADDR[12]
FEC_MDC	fec.MDC	audmux.AUD5_RXFS		audmux.AUD5_RXFS	gpt.CAPIN1	gpio4.GPIO[22]	kitten.TRACE[25]	pl301_aim_mxi4_per1.HADDR[11]
FEC_MDIO	fec.MDIO	audmux.AUD5_RXC		audmux.AUD5_RXC	gpt.CMPOUT1	gpio4.GPIO[19]	kitten.TRACE[24]	pl301_aim_mxi4_per1.HADDR[5]
FEC_RX_ER	fec.RX_ER	audmux.AUD5_RXD		audmux.AUD5_RXD	gpt.CMPOUT2	gpio4.GPIO[23]	kitten.TRACE[23]	pl301_aim_mxi4_per1.HADDR[3]
FEC_CRS_DV	fec.RX_DV	audmux.AUD5_TXC		audmux.AUD5_TXC	gpt.CMPOUT3	gpio4.GPIO[18]	fec.COL	pl301_aim_mxi4_per1.HADDR[9]
FEC_RXD1	fec.RDATA[1]	audmux.AUD5_TXFS		audmux.AUD5_TXFS	gpt.CLKIN	gpio4.GPIO[24]	kitten.TRACE[30]	pl301_aim_mxi4_per1.HADDR[2]
FEC_TXD0	fec.TDATA[0]	audmux.AUD5_TXD		audmux.AUD5_TXD	usdhc1.RST	gpio4.GPIO[25]	kitten.TRACE[29]	pl301_aim_mxi4_per1.HADDR[8]
FEC_MDC	fec.MDC	audmux.AUDIO_CLK_OUT		audmux.AUDIO_CLK_OUT	usdhc2.VSELECT	gpio4.GPIO[27]	kitten.TRACE[28]	pl301_aim_mxi4_per1.HADDR[7]
FEC_TXD1	fec.TDATA[1]	usdhc4.DAT0		usdhc1.VSELECT	usdhc3.WP	gpio4.GPIO[17]	kitten.TRACE[27]	pl301_aim_mxi4_per1.HADDR[1]
FEC_TX_EN	fec.TX_EN	usdhc4.DAT1		usdhc1.WP	usdhc3.CD	gpio4.GPIO[16]	kitten.TRACE[26]	fec.RX_CLK	pl301_aim_mxi4_per1.HADDR[6]
FEC_TXD1	fec.TDATA[1]	usdhc4.DAT2		usdhc1.CD	ccm.PMIC_RDY	gpio4.GPIO[26]	spdif.SPDIF_EXT_CL