ADVANTEST®
ADVANTEST CORPORATION

R3261/3361 SERIES

SPECTRUM ANALYZER

MAINTENANCE MANUAL

MANUAL NUMBER MEJ00 9407

Before reselling to other corporations or re-exporting to other countries, you are required to obtain permission from both the Japanese Government under its Export Control Act and the U.S. Government under its Export Control Law.

© 1989 ADVANTEST CORPORATION
All rights reserved.

First printing October 11,1989
Printed in Japan

TABLE OF CONTENTS

1. INTRODUCTION 1-1

1.1 How to Use This Manual 1-1
1.2 Over View 1-2

2. SPECIFICATIONS 2-1

2.1 R3261A/C Specifications 2-1
2.2 R3261AN/CN Specifications 2-6
2.3 R3261B/D Specifications 2-11
2.4 R3361A/C Specifications 2-16
2.5 R3361AN/CN Specifications 2-22
2.6 R3361B/D Specifications 2-28

3. THEORY OF OPERATION 3-1

3.1 How a Spectrum Analyzer Works 3-1
3.2 R3261/3361 Configurations 3-2
3.3 How the R3261/3361 Works 3-2
3.3.1 The Input Attenuator 3-4
3.3.2 First Mixer/Coupler 3-5
3.3.3 Second Mixer/Second Local 3-6
3.3.4 Third and Fourth Mixers and Local Oscillators 3-8
3.3.5 IF Step Amplifiers 3-10
3.3.6 LOG/QP 3-13
3.3.7 Analog-to-digital Conversion and Ramp Generator 3-14
3.3.8 First Local Oscillator 3-16
3.3.9 RF Control 3-20
3.3.10 YTO Driver 3-22
3.3.11 CAL Amplifier 3-23
3.3.12 Tracking Generator (R3361A,C/B,D Only) 3-24
3.3.13 Central Processing Unit and Peripherals 3-28
3.3.14 Counter Operation 3-32
3.3.15 Power Source 3-32
3.4 Location 3-33
3.4.1 Block/Board Layout 3-33
3.4.2 RF Block Internal View 3-34
3.4.3 TG Block Internal View 3-35

4. PERFORMANCE TEST 4-1

4.1 General 4-1
4.1.1 Testing Equipment 4-1
4.1.2 Calibration 4-2
4.2 Testing CAL Signals 4-3
4.3 Test Using Internal Signal 4-5
4.3.1 Testing Noise Sideband 4-5
4.3.2 Testing Frequency Drift 4-6
4.3.3 Testing Resolution Bandwidth (3dB bandwidth) 4-7
4.3.4 Testing Selectivity of Resolution Bandwidth 4-9
4.3.5 Testing Stability of QP Bandwidth 4-11
4.3.6 Testing Stability of Marker Indication (In normal mode) 4-13
4.3.7 Testing Stability of Marker Indication (In counter mode) 4-14
4.3.8 Testing Average Noise Level 4-15
4.3.9 Testing Residual Response 4-16
4.3.10 Testing Switchover Stability of Resolution Bandwidth 4-17
4.4 Testing Using Measuring Equipment 4-18
4.4.1 Testing Stability of Reference Oscillator 4-18
4.4.2 Testing Stability of Center Frequency 4-19
4.4.3 Testing Stability of Frequency Span 4-21
4.4.4 Testing LOG Linearity 4-23
4.4.5 Testing LIN Linearity 4-27
4.4.6 Testing Stability of Reference Level 4-28
4.4.7 Testing Stability of Input Attenuator Changeover 4-30
4.4.8 Testing Frequency Response 4-32
4.4.9 Testing Spurious Response 4-34
4.4.10 Testing Stability of Sweep Time 4-36
4.4.11 Testing Stability of TG Output Level (For R3361A,C/B,D only) 4-38
4.4.12 Testing TG Frequency Response (For R3361A,C/B,D only) 4-39
4.4.13 Testing Stability of TG Output Level Changeover (For R3361A,C/B,D only) 4-40
4.4.14 Testing Output Spurious (For R3361A,C/B,D only) 4-41
4.4.15 Testing TG Leak (For R3361A,C/B,D only) 4-42
4.5 Test Report 4-43

5. ADJUSTMENTS 5-1

5.1 Measurement Standards and Support Measuring and Test Equipment Requirements 5-2

5.2 Preliminary Operations 5-5
5.3 Calibration Process 5-6
5.3.1 Center Frequency Accuracy Adjustment 5-10
(1) 10MHz Frequency Reference Adjustment 5-10
(2) YTO Adjustment 5-11
5.3.2 Frequency Span Adjustment 5-14
(1) Main Span 5-15
(2) 10MHz Span 5-16
(3) 2MHz Span 5-17
(4) LOG Span 5-18
5.3.3 Resolution Band Width Accuracy Adjustment 5-19
5.3.4 Resolution Band Width Switching Between Adjustment 5-28
(1) IF-1 5-29
(2) IF-2 5-32
5.3.5 LOG/LINEAR Amplifier Linearity Adjustment 5-35
LINER MODE 5-36
LOG MODE 5-37
QP MODE ADJ 5-38
IF GAIN ADJ 5-39
5.3.6 Reference Level Adjustment 5-40
(1) Step Amp 5-40
(2) RF Total Gain ADJ 5-43
5.3.7 TG Output Level Accuracy 5-47

6. MAINTENANCE (TROUBLESHOOTING) 6-1

6.1 Level Down 6-1
6.2 Unlock 6-4
6.3 TG Failure 6-8
6.4 Power Supply 6-11
6.5 CRT Unit 6-12

7. REPLACEABLE ELECTRICAL PARTS, CIRCUIT DIAGRAMS AND LOCATION 7-1

	BOARD NAME	PCB ASSEMBLY	PARTS LIST	CIRCUIT LAYOUT	PARTS LOCATION	CIRCUIT DIAGRAM
	IC CARD	BGC-015745	7-2	-	7-3	7-4 to 7-5
	CONTROL	BLQ-015670	7-7 to 7-8	-	7-9	7-10 to 7-26
	RF CONTROL	BLL-015672	7-27 to 7-30	7-31	7-32	7-33 to 7-34
	IF SECTION	BLQ-015668	7-35 to 7-54	7-55	7-56	7-57 to 7-94
	CPU	BLQ-015669	7-95 to 7-98	-	7-99	7-100 to 7-132
	TG KEY	BLB-015775	7-133	-	-	7-135
	KEY	BLG-015673	7-137	-	7-139	7-140 to 7-141
RF	RF BLOCK	WBL-3261RF	7-143	7-145	7-146	7-149
		WBL-3361RF	7-144	7-147	7-148	
	CAL AMP	BLB-015646	7-151	7-145	7-146	7-153
	YTO DRIVER	BLB-015647	7-155 to 7-156	7-157	7-158	7-159 to 7-160
	10MHz REF.	BLB-015727	7-161	7-147	7-148	7-163
	SAMPLER	BTB-016118	7-165	7-145	7-146	7-167 to 7-168
	VCO CONT	BLC-015650	7-169 to 7-170	7-145	7-146	7-171
	3RD CONV	BLG-015645	7-173 to 7-180	7-145	7-146	7-181 to 7-183
	YTO SYNTHE	BLK-015649	7-185 to 7-192	7-145	7-146	7-193 to 7-196
	INPUT ATT	BTB-015641	7-197	7-145	7-146	7-199
	1ST MIXER	BTB-015642	7-201	7-145	7-146	7-203
	2ND CONV	BTD-015644	7-205 to 7-207	7-145	7-146	7-209 to 7-210
TG	TG BLOCK	WBL-3361TG	7-211	7-213 7-215	7-214 7-216	7-217
	OUTPUT AMP	BED-015986	7-219 to 7-221	7-215	7-216	7-223
	TG SAMPLER	BLB-015987	7-225	7-213	7-214	7-227
	ALC CONT.	BLC-015680	7-229 to 7-230	7-215	7-216	7-231
	T.G CONT.	BLC-015681	7-233	7-235	-	7-236
	TG PLL	BLD-015988	7-237 to 7-238	7-213	7-214	7-239
	4GHz OSC	BTB-015676	7-241	7-215	7-216	7-243
	TG MIX-1	BTB-015722	7-245	7-213	7-214	7-247
	TG MIX-2	BTB-015723	7-249	7-213	7-214	7-251
	MOTHER	BLH-015674	7-253	-	-	7-255 to 7-256
	BATT. HOLDER	BLB-016053	7-257	-	-	7-259

8. REPLACEABLE MECHANICAL PARTS 8-1

LIST OF ILLUSTRATIONS

No.	Title	Page
3-1	Typical Spectrum Analyzer Display	3-1
3-2	R3261/3361 Block Diagram	3-3
3-3	Input Attenuator	3-4
3-4	First Mixer/Coupler	3-5
3-5	Second Mixer/Second Local Oscillator	3-6
3-6	Spectrum Distribution at the MON OUT Terminal	3-7
3-7	Third and Fourth Mixers and Local Oscillators	3-8
3-8	IF1 and IF2 Step Amplifiers	3-10
3-9	LOG/QP	3-13
3-10	A/D Conversion and Ramp Generator	3-15
3-11	First Local Oscillator	3-16
3-12	400MHz P.L.L.	3-18
3-13	YTO P.L.L.	3-19
3-14	RF Control	3-21
3-15	YTO Driver	3-22
3-16	CAL Amplifier	3-23
3-17	Tracking Generator Block Diagram	3-24
3-18	Output Amplifier	3-25
3-19	TG Mixer	3-26
3-20	4GHz Oscillator	3-27
3-21	R3261/3361 Mother Board	3-28
3-22	Debug Mode Display	3-31
3-23	Power Source	3-32
3-24	Block/Board Layout	3-33
3-25	RF Block Internal View	3-34
3-26	TG Block Internal View	3-35
6-1	Voltage Check Points	6-11
6-2	Fine Adjustment of The CRT Unit	6-12
6-3	CRT and Power Supply Assembly	6-13

LIST OF TABLES

No.	Title	Page
3-1	R3261/3361 Configurations	3-2
3-2	Attenuator Switch Settings	3-4
3-3	RBW Setup	3-11
3-4	REF LEVELs and Step Amplifier Settings	3-12
3-5	SPAN Setting and P.L.L Functions	3-16
3-6	400MHz VCO Loop Filer Settings	3-17
3-7	YTO P.L.L. Loop Filer Settings	3-20
3-8	CAL LEVELs and CAL SIGNALs	3-23
3-9	Switch Settings for TG Output Levels	3-25
3-10	Memory Map	3-29
3-11	Hexadecimal Values of R3261/3361 Keys	3-31
4-1	Testing Equipment	4-1
4-2	Cable and Adapters Required	4-2
4-3	Relationship Between Resolution Bandwidth and Span	4-8
4-4	Settings for Resolution Bandwidth Selectivity Test	4-10
4-5	CISPR Standards for QP Value Measurement Basic Characteristic	4-11
4-6	Setting in The QP Bandwidth Stability Test	4-12
4-7	Relationship Between Resolution Bandwidth and FREQ SPAN	4-17
4-8	FREQ SPAN and Center Frequency Stability	4-19
4-9	REF LEVEL and External Attenuator Settings	4-29
4-10	Testing Stability of Input Attenuator Changeover	4-31
4-11	CENTER FREQ and SPAN for Dynamic Range Test	4-35
4-12	Stability of TG Output Level Changeover	4-40
5-1	Measurement Standards (MS) Performance Requirements	5-3
5-2	Support Measuring and Test Equipment (S·M&TE) Performance Requirements	5-4
7-1	Contents for Chapter 7	7-1

1. INTRODUCTION

This chapter explains how to use this manual, and features of this spectrum analyzer.

1.1 How to Use This Manual

1. INTRODUCTION	This chapter explains how to use this manual, and features of this spectrum analyzer.
2. SPECIFICATION	This chapter lists the R3261/3361 series specifications and accessories.
3. THEORY OF OPERATION	This chapter describes the operation of spectrum analyzer.
4. PERFORMANCE TESTS	This chapter describes functions and cables necessary to the performance test for spectrum analyzer, and the method of performance test.
5. CALIBRATION (REFER TO NCSL)	This chapter describes the method of calibrating the spectrum analyzer.
6. MAINTENANCE (TROUBLESHOOTING)	This chapter describes the method of troubleshooting the spectrum analyzer.
7. REPLACEABLE ELECTRICAL PARTS, CIRCUIT DIAGRAMS AND LOCATIONS	This chapter lists the part list, circuit diagram, and layout drawing of spectrum analyzer.
8. REPLACEABLE MECHANICAL PARTS	This chapter lists the mechanical part table of spectrum analyzer.

1.2 Overview

The R3261/3361 Series spectrum analyzer, which employs a synthesized local oscillator for assuring highly stable spectrum analyzer, features wide frequency range from 9kHz to 2.6GHz(R3261A,C/AN,CN, R3361A,C/AN,CN),
9kHz to 3.6GHz (R3261B/D, R3361B/D),
wide input range from -130dBm to +25dBm (R3261A,C/B,D, R3361A,C/B,D),
-19dBμ to +132dBμ (R3261AN/CN, R3361AN/CN),
wide measurement display range of 115dB
and high resolution of 30Hz, low residual FM of $20Hz_{p-p}$, less noise sideband of -105dBc/Hz (20kHz output from carrier) as well as full remote-control GPIB, and the memory card function for saving/recalling data and panel settings.

The R3361 contains a tracking generator that facilitates frequency characteristic measurement.

Features

① This analyzer permits sweeping over a wide frequency range from 9kHz to 3.6GHz (R3261B/D,3361B/D).

② A maximum frequency resolution of 30Hz enables analysis of adjacent signals and spurious response.

③ High-precision frequency measurement
A reference crystal oscillator with an aging rate of 2×10^{-8}/day is installed to measure very weak signals (which cannot be measured by any counter) at a resolution of 1Hz in the counter mode.

④ Use of a memory card permits saving/recalling of front panel settings.

⑤ The field strength can be viewed and read directly after compensating the antenna calibration coefficient and that the QR value based on the CISPR standard can be observed directly.

⑥ Various enhanced functions supported by digital indications
Brief information needed for spectrum analysis is displayed on the CRT together with signal traces. The digital memory screen provides flickerless display. Various marker functions assures accurate and easy reading even in the manual mode.

⑦ Two channels of completely independent digital memories enable simultaneous display of two screens.

⑧ A full-remote-control GPIB is used as a powerful system component.

⑨ The built-in tracking generator of the R3361 enables direct viewing of frequency attenuation of 115dB or more.

2. SPECIFICATIONS

This chapter lists the R3261A/C, R3261AN/CN, R3261B/D, R3361A/C, R3361AN/CN, and R3361B/D specifications and accessories.

2.1 R3261A/C Specifications

(1) Frequency Specifications

Measurable bandwidth : 9kHz to 2.6GHz

Center frequency setting increment
: 1Hz

Center frequency indication accuracy
: ±(3% of the span + center frequency x reference oscillator accuracy + 20Hz) (span ≦ 2MHz)
±(2% of the span + center frequency x reference oscillator accuracy + 50kHz) (span > 2MHz)

Reference oscillator : Internal or external input (10MHz)

Internal reference oscillator accuracy
Aging : ±(2 x 10^{-8} per day)
±(1 x 10^{-7} per year)
Temperature stability ±5 x 10^{-8} (from 0°C to +50°C, +25°C as a reference)

Frequency span
LIN mode : 1kHz to 2.6GHz, and 0
LOG mode : 1, 2, or 3 decades of span can be selected within the range from 10kHz to 1000MHz.

Frequency span accuracy
LIN mode : ±3% of the span (span > 2MHz)
±5% of the span (span ≦ 2MHz)

Frequency stability
Residual FM : 50kHz p-p or less (span > 10MHz)
2kHz p-p or less (10MHz ≧ span > 2MHz)
20Hz p-p or less (span ≦ 2MHz)
Frequency drift : 300Hz/min. or less (span ≦ 2MHz, at a constant temperature after an hour of warming up)

Side band noise : ≦-105dBc/Hz (20kHz offset)

Resolution
3dB bandwidth : 30Hz to 1MHz, switched at 1 to 3 steps

6dB bandwidth : 200Hz, 9kHz, 120kHz
Selectivity : ≦15: 1 (60dB : 3dB)
Bandwidth accuracy : ±20%

Marker accuracy
Normal mode : Center frequency indication accuracy + span accuracy
Counter mode : Indicated frequency x reference oscillator accuracy ±1 count

(2) Amplitude Specifications

Amplitude measurement range
: -130dBm to +25dBm

Screen display range
LOG mode : 120dB (10dB/div)
: 80dB (10dB/div)
: 50dB (5dB/div)
: 20dB (2dB/div)
: 10dB (1dB/div)
LIN mode : 10div
QP mode : 80dB (10dB/div)
Provided the measurement range is 70dB

Linearity display
LOG mode : ±2.0dB/110dB, ±1.5dB/70dB, ±1.0dB/10dB, ±0.2dB/1dB
LIN mode : ±5% of the fullscale
QP mode : ±2.0dB/70dB, ±1.0dB/40dB

Reference level indication range
: -109.9dBm to +40.0dBm
0.715μV to 22.4V

Reference level accuracy : ±0.3dB 0 to -50dBm
±0.7dB +20 to -70dBm

Dynamic range
Average noise level : -121dBm + 1.55f(GHz)dB
(Resolution bandwidth 300Hz, video bandwidth 1Hz, input attenuator 0dB, frequency 1MHz or more)
Secondary, tertiary distortion
: ≦ -70dB -30dBm input
(Input attenuator 0dB, frequency 10MHz or more)
Frequency response : ±0.5dB 100kHz to 2GHz
±1.0dB 9kHz to 2.6GHz
(LOG mode, input attenuator 10dB, 20 to 30°C)

Residual response : ≦ -100dBm (Input attenuator 0dB, 50Ω terminator, frequency 500kHz or more)

Resolution bandwidth switching accuracy:
: ±0.3dB (after automatic calibration)

Video filter : 1Hz to 1MHz (switched 1 to 10 steps)

(3) Sweep Specifications

Sweep time : 30msec to 1000sec and Manual sweeping

Sweep time accuracy : ≦ 3%

Trigger mode : FREE RUN, LINE, VIDEO, EXT, TV-V, SINGLE

(4) Input Specifications

Input impedance : Approx. 50Ω
VSWR ≦ 1.5 (100kHz ≦ f ≦ 2GHz)
VSWR ≦ 2.0 (9kHz ≦ f ≦ 2.6GHz)
(Input attenuator ≧ 10dB)

Input connector : N connector

Maximum input level : +25dBm (input attenuator ≧ 30dB)
±50VDC max

Input attenuator : 0 to 50dB (10dB steps)

Input attenuator switching accuracy
: ±1.0dB (≦2.0GHz)
±1.5dB (≦2.6GHz)
(Input attenuator 10dB standard)

Detection mode : NORMAL, POSI, NEGA, SAMPLE

(5) Output Specifications

External memory function : IC memory card

Video output : Approx. 1Vp-p, approx 75Ω, composite

Sound monitor output : The AM and FM sound can be monitored with an approximately 8Ω earphone.

Power supply for probes : ±15V, 4-pin connector

Recorder output : X axis approx. -5 to +5V, output impedance approx. 10kΩ
Y axis approx. 0 to +4V, output impedance approx. 220Ω

GPIB data output/ Remote control	: The built-in GPIB interface allows data output and remote control.
Direct plot	: Also, the built-in GPIB interface allows an output of on-screen data to the R9833 plotter to have a hardcopy.
Printer output	: The built-in GPIB interface allows HP2225AJ to output a hard copy of on-screen data.

(6) Indication Specifications

Indicated items	: Waveforms, setting conditions, grid, label
CRT display unit	: 5.5 inch
Trace	: Two screens of A and B
WRITE	: Signal response from the analyzer is indicated at every sweeping.
VIEW	: The WRITE waveform contained in the memory, or other contents in the memory are displayed.
MAX HOLD	: Indication of the maximum signal level of repeat sweeping
AVG	: Indication of the average of repeat sweeping

(7) Other functions (R3261C only)

Occupied bandwidth measurement/Adjacent channel leakage power measurement

Multi-marker function

(8) General Specifications

Using ambient condition	: 0 to 50°C 85%RH or less
Storage temperature range	: -20 to +60°C

Power supply : The power voltage of the analyzer is set at the delivery according to the customer's ordering information.

Option No.	Standard	44
Line voltage (V)	90 to 132	198 to 250

48 to 66Hz

R3261C : Line voltage range 90 to 132VAC or 198 to 250VAC is automatically selected internally.
48 to 66Hz

Power consumption : 220VA or less

Dimensions : Approx. 330(W) x 177(H) x 450(D) mm

Mass : Approx. 15kg

(9) Options and Accessories

Option

OPTION 02 RS-232 interface

OPTION 04 Occupied bandwidth measurement/Adjacent channel leakage power measurement

OPTION 12 Gated sweep function

OPTION 15 Controller function (Parallel I/O, Serial I/O)

OPTION 70 Multi-marker function

OPTION 72 Printer output

OPTION 80 RS-232 interface/Gated sweep function

OPTION 81 Controller function/Gated sweep function

Separate accessory

R3551 EMI preselector
R16211 Carring case
A02804 Front cover
A09505 Memory card (32k byte, 5 pieces)
A09506 Memory card (128k byte, 5 pieces)
A02034 Panel Mount Kits
A02255 Rack Mount Kits (JIS)
A02455 Rack Mount Kits (EIA)

2.2 R3261AN/CN Specifications

(1) Frequency Specifications

Measurable bandwidth : 9kHz to 2.6GHz

Center frequency setting increment
: 1Hz

Center frequency indication accuracy
: ±(3% of the span + center frequency x reference oscillator accuracy + 20Hz) (span ≦ 2MHz)
±(2% of the span + center frequency x reference oscillator accuracy + 50kHz) (span > 2MHz)

Reference oscillator : Internal or external input (10MHz)

Internal reference oscillator accuracy
Aging : ±(2 x 10^{-8} per day)
±(1 x 10^{-7} per year)
Temperature stability ±5 x 10^{-8} (from 0°C to +50°C, +25°C as a reference)

Frequency span
LIN mode : 1kHz to 2.6GHz, and 0
LOG mode : 1, 2, or 3 decades of span can be selected within the range from 10kHz to 1000MHz.

Frequency span accuracy
LIN mode : ±3% of the span (span > 2MHz)
±5% of the span (span ≦ 2MHz)

Frequency stability
Residual FM : 50kHz p-p or less (span > 10MHz)
2kHz p-p or less (10MHz ≧ span > 2MHz)
20Hz p-p or less (span ≦ 2MHz)
Frequency drift : 300Hz/min. or less (span ≦ 2MHz, at a constant temperature after an hour of warming up)

Side band noise : ≦-105dBc/Hz (20kHz offset)

Resolution
3dB bandwidth : 30Hz to 1MHz, switched at 1 to 3 steps

6dB bandwidth : 200Hz, 9kHz, 120kHz
Selectivity : ≦15: 1 (60dB : 3dB)
Bandwidth accuracy : ±20%

Marker accuracy
Normal mode : Center frequency indication accuracy + span accuracy
Counter mode : Indicated frequency x reference oscillator accuracy ±1 count

(2) Amplitude Specifications

Amplitude measurement range
: -19dBμ to +132dBμ

Screen display range
LOG mode : 120dB (10dB/div)
: 80dB (10dB/div)
: 50dB (5dB/div)
: 20dB (2dB/div)
: 10dB (1dB/div)
LIN mode : 10div
QP mode : 80dB (10dB/div)
Provided the measurement range is 70dB

Linearity display
LOG mode : ±2.0dB/110dB, ±1.5dB/70dB, ±1.0dB/10dB, ±0.2dB/1dB
LIN mode : ±5% of the fullscale
QP mode : ±2.0dB/70dB, ±1.0dB/40dB

Reference level indication range
: +0.1dBμ to +150dBμ
1.01μV to 31.6V

Reference level accuracy : ±0.3dB +110 to +60dBμ
±0.7dB +130 to +40dBμ

Dynamic range
Average noise level : -10dBμ + 1.55f(GHz)dB
(Resolution bandwidth 300Hz, video bandwidth 1Hz, input attenuator 0dB, frequency 1MHz or more)
Secondary, tertiary distortion
: ≦ -70dB -30dBm input
(Input attenuator 0dB, frequency 10MHz or more)
Frequency response : ±0.5dB 100kHz to 2GHz
±1.5dB 9kHz to 2.6GHz
(LOG mode, input attenuator 10dB, 20 to 30°C)
Residual response : ≦ +11dBμ (Input attenuator 0dB, 75Ω terminator, frequency 500kHz or more)

Resolution bandwidth switching accuracy
: ±0.3dB (after automatic calibration)

Video filter : 1Hz to 1MHz (switched 1 to 10 steps)

(3) Sweep Specifications

Sweep time : 30msec to 1000sec and Manual sweeping

Sweep time accuracy : ≦ 3%

Trigger mode : FREE RUN, LINE, VIDEO, EXT, TV-V, SINGLE

(4) Input Specifications

Input impedance : Approx. 75Ω
VSWR ≦ 1.5 (100kHz ≦ f ≦ 2GHz)
VSWR ≦ 2.0 (9kHz ≦ f ≦ 2.6GHz)
(Input attenuator ≧ 10dB)

Input connector : N connector

Maximum input level : +132dBμ (input attenuator ≧ 30dB)
±50VDC max

Input attenuator : 0 to 50dB (10dB steps)

Input attenuator switching accuracy
: ±1.0dB (≦2.0GHz)
±1.5dB (≦2.6GHz)
(Input attenuator 10dB standard)

Detection mode : NORMAL, POSI, NEGA, SAMPLE

(5) Output Specifications

External memory function : IC memory card

Video output : Approx. 1Vp-p, approx 75Ω, composite

Sound monitor output : The AM and FM sound can be monitored with an approximately 8Ω earphone.

Power supply for probes : ±15V, 4-pin connector

Recorder output : X axis approx. -5 to +5V, output impedance approx. 10kΩ
Y axis approx. 0 to +4V, output impedance approx. 220Ω

GPIB data output/ Remote control	: The built-in GPIB interface allows data output and remote control.
Direct plot	: Also, the built-in GPIB interface allows an output of on-screen data to the R9833 plotter to have a hardcopy.
Printer output	: The built-in GPIB interface allows HP2225AJ to output a hard copy of on-screen data.

(6) Indication Specifications

Indicated items	: Waveforms, setting conditions, grid, label
CRT display unit	: 5.5 inch
Trace	: Two screens of A and B
WRITE	: Signal response from the analyzer is indicated at every sweeping.
VIEW	: The WRITE waveform contained in the memory, or other contents in the memory are displayed.
MAX HOLD	: Indication of the maximum signal level of repeat sweeping
AVG	: Indication of the average of repeat sweeping

(7) Other functions (R3261CN only)

Occupied bandwidth measurement/Adjacent channel leakage power measurement

Multi-marker function

(8) General Specifications

Using ambient condition	: 0 to 50°C 85%RH or less
Storage temperature range	: -20 to +60°C

Power supply : The power voltage of the analyzer is set at the delivery according to the customer's ordering information.

Option No.	Standard	44
Line voltage (V)	90 to 132	198 to 250

48 to 66Hz

R3261CN : Line voltage range 90 to 132VAC or 198 to 250VAC is automatically selected internally.
48 to 66Hz

Power consumption : 220VA or less

Dimensions : Approx. 330(W) x 177(H) x 450(D) mm

Mass : Approx. 15kg

(9) Options and Accessories

Option

OPTION 02 RS-232 interface

OPTION 04 Occupied bandwidth measurement/Adjacent channel leakage power measurement

OPTION 12 Gated sweep function

OPTION 15 Controller function (Parallel I/O, Serial I/O)

OPTION 70 Multi-marker function

OPTION 72 Printer output

OPTION 80 RS-232 interface/Gated sweep function

OPTION 81 Controller function/Gated sweep function

Separate accessory

R3551 EMI preselector
R16211 Carring case
A02804 Front cover
A09505 Memory card (32k byte, 5 pieces)
A09506 Memory card (128k byte, 5 pieces)
A02034 Panel Mount Kits
A02255 Rack Mount Kits (JIS)
A02455 Rack Mount Kits (EIA)

2.3 R3261B/D Specifications

(1) Frequency Specifications

Measurable bandwidth : 9kHz to 3.6GHz

Center frequency setting increment
: 1Hz

Center frequency indication accuracy
: ±(3% of the span + center frequency x reference oscillator accuracy + 20Hz) (span ≦ 2MHz)
±(2% of the span + center frequency x reference oscillator accuracy + 50kHz) (span > 2MHz)

Reference oscillator : Internal or external input (10Hz)

Internal reference oscillator accuracy
Aging : ±(2 x 10^{-8} per day)
±(1 x 10^{-7} per year)
Temperature stability ±5 x 10^{-8} (from 0°C to +50°C, +25°C as a reference)

Frequency span
LIN mode : 1kHz to 3.6GHz and 0
LOG mode : 1, 2, or 3 decades of span can be selected within the range from 10kHz to 1000MHz.

Frequency span accuracy
LIN mode : ±3% of the span (span > 2MHz)
±5% of the span (span ≦ 2MHz)

Frequency stability
Residual FM : 50kHz p-p or less (span > 10MHz)
2kHz p-p or less (10MHz ≧ span > 2MHz)
20Hz p-p or less (span ≦ 2MHz)
Frequency drift : 300Hz/min. or less (span ≦ 2MHz, at a constant temperature after an hour of warming up)

Side band noise : ≦ -105dBc/Hz f ≦ 3.0GHz
≦ -101dBc/Hz f ≦ 3.6GHz
(20kHz offset)

Resolution
3dB bandwidth : 30Hz to 1MHz, switched 1 to 3 steps
6dB bandwidth : 200Hz, 9kHz, 120kHz
Selectivity : ≦15: (60dB : 3dB)
Bandwidth accuracy : ±20%

Marker accuracy
- Normal mode : Center frequency indication accuracy + span accuracy
- Counter mode : Indicated frequency x reference oscillator accuracy ±1 count

(2) Amplitude Specifications

Amplitude measurement range
: -130dBm to +25dBm

Screen display range
- LOG mode : 120dB (10dB/div)
  : 80dB (10dB/div)
  : 50dB (5dB/div)
  : 20dB (2dB/div)
  : 10dB (1dB/div)
- LIN mode : 10div
- QP mode : 80dB (10dB/div)
  Provided the measurement range is 70dB

Linearity display
- LOG mode : ±2.0dB/110dB, ±1.5dB/70dB, ±1.0dB/10dB, ±0.2dB/1dB
- LIN mode : ±5% of the fullscale
- QP mode : ±2.0dB/70dB, ±1.0dB/40dB

Reference level indication range
: -109.9dBm to +40.0dBm
0.715μV to 22.4V

Reference level accuracy : ±0.3dB 0 to -50dBm
±0.7dB +20 to -70dBm

Dynamic range
- Average noise level : -121dBm + 1.55f(GHz)dB
  (Resolution bandwidth 300Hz, video bandwidth 1Hz, input attenuator 0dB, frequency 1MHz or more)
- Secondary, tertiary distortion
  : ≦ -70dB -30dBm input
  (Input attenuator 0dB, frequency 10MHz or more)
- Frequency response : ±0.5dB 100kHz to 2GHz
  ±1.0dB 9kHz to 3.6GHz
  (LOG mode, input attenuator 10dB, 20 to 30°C)
- Residual response : ≦ -100dBm (Input attenuator 0dB, 50Ω terminator, frequency 500kHz or more)

Resolution bandwidth switching accuracy
: ±0.3dB (after automatic calibration)

Video filter : 1Hz to 1MHz (switched 1 to 10 steps)

(3) Sweep Specifications

Sweep time : 30msec to 1000sec and Manual sweeping

Sweep time accuracy : ≦ 3%

Trigger mode : FREE RUN, LINE, VIDEO, EXT, TV-V, SINGLE

(4) Input Specifications

Input impedance : Approx. 50Ω
VSWR ≦ 1.5 (100kHz ≦ f ≦ 2GHz)
VSWR ≦ 2.0 (9kHz ≦ f ≦ 3.6GHz)
(Input attenuator ≧ 10dB)

Input connector : N connector

Maximum input level : +25dBm (input attenuator ≧ 30dB)
±50VDC max

Input attenuator : 0 to 50dB (10dB steps)

Input attenuator switching accuracy
: ±1.0dB (≦ 2.0GHz)
±1.5dB (≦ 3.6GHz)
(Input attenuator 10dB standard)

Detection mode : NORMAL, POSI, NEGA, SAMPLE

(5) Output Specifications

External memory function : IC memory card

Video output : Approx. 1Vp-p, approx 75Ω, composite

Sound monitor output : The AM and FM sound can be monitored with an approximately 8Ω earphone.

Power supply for probes : ±15V, 4-pin connector

Recorder output : X axis approx. -5 to +5V, output impedance approx. 10kΩ
Y axis approx. 0 to +4V, output impedance approx. 220Ω

GPIB data output/ Remote control	: The built-in GPIB interface allows data output and remote control.
Direct plot	: Also, the built-in GPIB interface allows an output of on-screen data to the R9833 plotter to have a hardcopy.
Printer output	: The built-in GPIB interface allows HP2225AJ to output a hard copy of on-screen data.

(6) Indication Specifications

Indicated items	: Waveforms, setting conditions, grid, label
CRT display unit	: 5.5 inch
Trace	: Two screens of A and B
WRITE	: Signal response from the analyzer is indicated at every sweeping.
VIEW	: The WRITE waveform contained in the memory, or other contents in the memory are displayed.
MAX HOLD	: Indication of the maximum signal level of repeat sweeping
AVG	: Indication of the average of repeat sweeping

(7) Other functions (R3261D only)

Occupied bandwidth measurement/Adjacent channel leakage power measurement

Multi-marker function

(8) General Specifications

Using ambient condition	: 0 to 50°C 85%RH or less
Storage temperature range	: -20 to +60°C

Power supply : The power voltage of the analyzer is set at the delivery according to the customer's ordering information.

Option No.	Standard	44
Line voltage (V)	90 to 132	198 to 250

48 to 66Hz

R3261D : Line voltage range 90 to 132VAC or 198 to 250VAC is automatically selected internally.
48 to 66Hz

Power consumption : 220VA or less

Dimensions : Approx. 330(W) x 177(H) x 450(D) mm

Mass : Approx. 15kg

(9) Options and Accessories

Option

OPTION 02 RS-232 interface

OPTION 04 Occupied bandwidth measurement/Adjacent channel leakage power measurement

OPTION 12 Gated sweep function

OPTION 15 Controller function (Parallel I/O, Serial I/O)

OPTION 70 Multi-marker function

OPTION 72 Printer output

OPTION 80 RS-232 interface/Gated sweep function

OPTION 81 Controller function/Gated sweep function

Separate accessory

R3551 EMI preselector
R16211 Carring case
A02804 Front cover
A09505 Memory card (32k byte, 5 pieces)
A09506 Memory card (128k byte, 5 pieces)
A02034 Panel Mount Kits
A02255 Rack Mount Kits (JIS)
A02455 Rack Mount Kits (EIA)

2.4 R3361A/C Specifications

(1) Frequency Specifications

Measurable bandwidth : 9kHz to 2.6GHz

Center frequency setting increment
: 1Hz

Center frequency indication accuracy
: ±(3% of the span + center frequency x reference oscillator accuracy + 20Hz) (span ≦ 2MHz)
±(2% of the span + center frequency x reference oscillator accuracy + 50kHz) (span > 2MHz)

Reference oscillator : Internal or external input (10MHz)

Internal reference oscillator accuracy
Aging : ±(2 x 10^{-8} per day)
±(1 x 10^{-7} per year)
Temperature stability ±5 x 10^{-8} (from 0°C to +50°C, +25°C as a reference)

Frequency span
LIN mode : 1kHz to 2.6GHz and 0
LOG mode : 1, 2, or 3 decades of span can be selected within the range from 10kHz to 1000MHz.

Frequency span accuracy
LIN mode : ±3% of the span (span > 2MHz)
±5% of the span (span ≦ 2MHz)

Frequency stability
Residual FM : 50kHz p-p or less (span > 10MHz)
2kHz p-p or less (10MHz ≧ span > 2MHz)
20Hz p-p or less (span ≦ 2MHz)
Frequency drift : 300Hz/min. or less (span ≦ 2MHz, at a constant temperature after an hour of warming up)

Side band noise : ≦-105dBc/Hz (20kHz offset)

Resolution
3dB bandwidth : 30Hz to 1MHz, switched 1 to 3 steps
6dB bandwidth : 200Hz, 9kHz, 120kHz
Selectivity : ≦15: 1 (60dB : 3dB)
Bandwidth accuracy : ±20%

Marker accuracy
Normal mode : Center frequency indication accuracy + span accuracy
Counter mode : Indicated frequency x reference oscillator accuracy ±1 count (Excepting TG mode)

(2) Amplitude Specifications

Amplitude measurement range
: -130dBm to +25dBm

Screen display range
LOG mode : 120dB (10dB/div)
: 80dB (10dB/div)
: 50dB (5dB/div)
: 20dB (2dB/div)
: 10dB (1dB/div)
LIN mode : 10div
QP mode : 80dB (10dB/div)
Provided the measurement range is 70dB

Linearity display
LOG mode : ±2.0dB/110dB, ±1.5dB/70dB, ±1.0dB/10dB, ±0.2dB/1dB
LIN mode : ±5% of the fullscale
QP mode : ±2.0dB/70dB, ±1.0dB/40dB

Reference level indication range
: -109.9dBm to +40.0dBm
0.715μV to 22.4V

Reference level accuracy : ±0.3dB 0 to -50dBm
±0.7dB +20 to -70dBm

Dynamic range
Average noise level : -121dBm + 1.55f(GHz)dB (Resolution bandwidth 300Hz, video bandwidth 1Hz, input attenuator 0dB, frequency 1MHz or more)
Secondary, tertiary distortion
: ≦ -70dB -30dBm input (Input attenuator 0dB, frequency 10MHz or more)
Frequency response : ±0.5dB 100kHz to 2GHz
±1.0dB 9kHz to 2.6GHz
(LOG mode, input attenuator 10dB, 20 to 30°C)
Residual response : ≦ -100dBm (Input attenuator 0dB, 50Ω terminator, frequency 500kHz or more)

Resolution bandwidth switching accuracy
: ±0.3dB (after automatic calibration)

Video filter : 1Hz to 1MHz (switched 1 to 10 steps)

(3) Sweep Specifications

Sweep time : 30msec to 1000sec and Manual sweeping

Sweep time accuracy : ≦ 3%

Trigger mode : FREE RUN, LINE, VIDEO, EXT, TV-V, SINGLE

(4) Input Specifications

Input impedance : Approx. 50Ω
VSWR ≦ 1.5 (100kHz ≦ f ≦ 2GHz)
VSWR ≦ 2.0 (9kHz ≦ f ≦ 2.6GHz)
(Input attenuator ≧ 10dB)

Input connector : N connector

Maximum input level : +25dBm (input attenuator ≧ 30dB)
±50VDC max

Input attenuator : 0 to 50dB (10dB steps)

Input attenuator switching accuracy
: ±1.0dB (≦2.0GHz)
±1.5dB (≦2.6GHz)
(Input attenuator 10dB standard)

Detection mode : NORMAL, POSI, NEGA, SAMPLE

(5) Tracking generator specifications

Frequency range : 9kHz to 2.6GHz

Output level range : 0dBm to -50dBm Setting can be done in steps of 1dB.

Output level accuracy : ±0.5dB (30MHz, -10dBm, +20 to +30°C)

Output level flatness : ±0.7dB (100kHz to 1.0GHz)
±1.5dB (9kHz to 2.6GHz)
(-10dBm output)

Output level switching accuracy	: ±1.0dB (100kHz to 1.0GHz) ±2.0dB (9kHz to 2.6GHz) (-10dBm reference)
Output spuriousness	: Harmonics spurious level ≦ -20dB Non-harmonics spurious level ≦ -30dB (Output level 0dBm)
TG leakage	: ≦ -110dBm
Output impedance	: Approx. 50Ω
Output VSWR	: ≦ 1.5 (100kHz to 2.0GHz) ≦ 2.0 (9kHz to 2.6GHz) (At ≦ -10dBm output)
Output connector	: N-connector

(6) Output Specifications

External memory function	: IC memory card
Video output	: Approx. 1Vp-p, approx. 75Ω, composite
Sound monitor output	: The AM and FM sound can be monitored with an approximately 8Ω earphone.
Power supply for probes	: ±15V, 4-pin connector
Recorder output	: X axis approx. -5 to +5V, output impedance approx. 10kΩ Y axis approx. 0 to +4V, output impedance approx. 220Ω
GPIB data output/ Remote control	: The built-in GPIB interface allows data output and remote control.
Direct plot	: Also, the built-in GPIB interface allows an output of on-screen data to the R9833 plotter to have a hardcopy.
Printer output	: The built-in GPIB interface allows HP2225AJ to output a hard copy of on-screen data.

(7) Indication Specifications

Indicated items	: Waveforms, setting conditions, grid, label
CRT display unit	: 5.5 inch
Trace	: Two screens of A and B
WRITE	: Signal response from the analyzer is indicated at every sweeping.
VIEW	: The WRITE waveform contained in the memory, or other contents in the memory are displayed.
MAX HOLD	: Indication of maximum signal level during repeated sweeping
AVG	: Indication of average signal level during repeated sweeping

(8) Other functions (R3361C only)

Occupied bandwidth measurement/Adjacent channel leakage power measurement

Multi-marker function

(9) General Specifications

Using ambient condition : 0 to 50°C
85%RH or less

Storage temperature range : -20 to +60°C

Power supply : The power voltage of the analyzer is set at the delivery according to the customer's ordering information.

Option No.	Standard	44
Line voltage (V)	90 to 132	198 to 250

48 to 66Hz

R3361C : Line voltage range 90 to 132VAC or 198 to 250VAC is automatically selected internally.
48 to 66Hz

Power consumption	: 220VA or less
Dimensions	: Approx. 330(W) x 177(H) x 450(D) mm
Mass	: Approx. 17kg

(10) Options and Accessories

Option

OPTION 02	RS-232 interface
OPTION 04	Occupied bandwidth measurement/Adjacent channel leakage power measurement
OPTION 12	Gated sweep function
OPTION 15	Controller function (Parallel I/O, Serial I/O)
OPTION 70	Multi-marker function
OPTION 72	Printer output
OPTION 80	RS-232 interface/Gated sweep function
OPTION 81	Controller function/Gated sweep function

Separate accessory

R3551	EMI preselector
R16211	Carring case
A02804	Front cover
A09505	Memory card (32k byte, 5 pieces)
A09506	Memory card (128k byte, 5 pieces)
A02034	Panel Mount Kits
A02255	Rack Mount Kits (JIS)
A02455	Rack Mount Kits (EIA)

2.5 R3361AN/CN Specifications

(1) Frequency Specifications

Measurable bandwidth : 9kHz to 2.6GHz

Center frequency setting increment
: 1Hz

Center frequency indication accuracy
: ±(3% of the span + center frequency x reference oscillator accuracy + 20Hz) (span ≦ 2MHz)
±(2% of the span + center frequency x reference oscillator accuracy + 50kHz) (span > 2MHz)

Reference oscillator : Internal or external input (10MHz)

Internal reference oscillator accuracy
Aging : ±(2 x 10^{-8} per day)
±(1 x 10^{-7} per year)
Temperature stability ±5 x 10^{-8} (from 0°C to +50°C, +25°C as a reference)

Frequency span
LIN mode : 1kHz to 2.6GHz and 0
LOG mode : 1, 2, or 3 decades of span can be selected within the range from 10kHz to 1000MHz.

Frequency span accuracy
LIN mode : ±3% of the span (span > 2MHz)
±5% of the span (span ≦ 2MHz)

Frequency stability
Residual FM : 50kHz p-p or less (span > 10MHz)
2kHz p-p or less (10MHz ≧ span > 2MHz)
20Hz p-p or less (span ≦ 2MHz)
Frequency drift : 300Hz/min. or less (span ≦ 2MHz, at a constant temperature after an hour of warming up)

Side band noise : ≦-105dBc/Hz (20kHz offset)

Resolution
3dB bandwidth : 30Hz to 1MHz, switched 1 to 3 steps
6dB bandwidth : 200Hz, 9kHz, 120kHz
Selectivity : ≦15: 1 (60dB : 3dB)
Bandwidth accuracy : ±20%

Marker accuracy
Normal mode : Center frequency indication accuracy + span accuracy
Counter mode : Indicated frequency x reference oscillator accuracy ±1 count (Excepting TG mode)

(2) Amplitude Specifications

Amplitude measurement range
: -19dBμ to +132dBμ

Screen display range
LOG mode : 120dB (10dB/div)
: 80dB (10dB/div)
: 50dB (5dB/div)
: 20dB (2dB/div)
: 10dB (1dB/div)
LIN mode : 10div
QP mode : 80dB (10dB/div)
Provided the measurement range is 70dB

Linearity display
LOG mode : ±2.0dB/110dB, ±1.5dB/70dB, ±1.0dB/10dB, ±0.2dB/1dB
LIN mode : ±5% of the fullscale
QP mode : ±2.0dB/70dB, ±1.0dB/40dB

Reference level indication range
: +0.1dBμ to +150dBμ
1.01μV to 31.6V

Reference level accuracy : ±0.3dB +110 to +60dBμ
±0.7dB +130 to +40dBμ

Dynamic range
Average noise level : -10dBμ + 1.55f(GHz)dB (Resolution bandwidth 300Hz, video bandwidth 1Hz, input attenuator 0dB, frequency 1MHz or more)
Secondary, tertiary distortion
: ≦ -70dB -30dBm input (Input attenuator 0dB, frequency 10MHz or more)
Frequency response : ±0.5dB 100kHz to 2GHz
±1.5dB 9kHz to 2.6GHz
(LOG mode, input attenuator 10dB, 20 to 30°C)
Residual response : ≦ +11dBμ (Input attenuator 0dB, 75Ω terminator, frequency 500kHz or more)

Resolution bandwidth switching accuracy
: ±0.3dB (after automatic calibration)

Video filter : 1Hz to 1MHz (switched 1 to 10 steps)

(3) Sweep Specifications

Sweep time : 30msec to 1000sec and Manual sweeping

Sweep time accuracy : ≦ 3%

Trigger mode : FREE RUN, LINE, VIDEO, EXT, TV-V, SINGLE

(4) Input Specifications

Input impedance : Approx. 75Ω
VSWR ≦ 1.5 (100kHz ≦f ≦ 2GHz)
VSWR ≦ 2.0 (9kHz ≦ f ≦ 2.6GHz)
(Input attenuator ≧ 10dB)

Input connector : N connector

Maximum input level : +132dBμ (input attenuator ≧ 30dB)
±50VDC max

Input attenuator : 0 to 50dB (10dB steps)

Input attenuator switching accuracy
: ±1.0dB (≦2.0GHz)
±1.5dB (≦2.6GHz)
(Input attenuator 10dB standard)

Detection mode : NORMAL, POSI, NEGA, SAMPLE

(5) Tracking generator specifications

Frequency range : 9kHz to 2.6GHz

Output level range : 105dBμ to +55dBμ Setting can be done in steps of 1dB.

Output level accuracy : ±0.5dB (30MHz, +95dBμ, +20 to +30°C)

Output level flatness : ±0.7dB (100kHz to 1.0GHz)
±1.5dB (100kHz to 2.0GHz)
±2.0dB (9kHz to 2.6GHz)
(+95dBμ output)

Output level switching accuracy	: ±1.0dB (100kHz to 1.0GHz) ±2.0dB (9kHz to 2.6GHz) (+95dBμ reference)
Output spuriousness	: Harmonics spurious level ≦ -20dB Non-harmonics spurious level ≦ -30dB (Output level +105dBμ)
TG leakage	: ≦ +1dBμ
Output impedance	: Approx. 75Ω
Output VSWR	: ≦ 1.5 (100kHz to 2.0GHz) ≦ 2.0 (9kHz to 2.6GHz) (At ≦ +95dBμ output)
Output connector	: N-connector

(6) Output Specifications

External memory function	: IC memory card
Video output	: Approx. 1Vp-p, approx. 75Ω, composite
Sound monitor output	: The AM and FM sound can be monitored with an approximately 8Ω earphone.
Power supply for probes	: ±15V, 4-pin connector
Recorder output	: X axis approx. -5 to +5V, output impedance approx. 10kΩ Y axis approx. 0 to +4V, output impedance approx. 220Ω
GPIB data output/ Remote control	: The built-in GPIB interface allows data output and remote control.
Direct plot	: Also, the built-in GPIB interface allows an output of on-screen data to the R9833 plotter to have a hardcopy.
Printer output	: The built-in GPIB interface allows HP2225AJ to output a hard copy of on-screen data.

(7) Indication Specifications

Indicated items : Waveforms, setting conditions, grid, label

CRT display unit : 5.5 inch

Trace : Two screens of A and B

WRITE : Signal response from the analyzer is indicated at every sweeping.

VIEW : The WRITE waveform contained in the memory, or other contents in the memory are displayed.

MAX HOLD : Indication of maximum signal level during repeated sweeping

AVG : Indication of average signal level during repeated sweeping

(8) Other functions (R3361CN only)

Occupied bandwidth measurement/Adjacent channel leakage power measurement

Multi-marker function

(9) General Specifications

Using ambient condition : 0 to 50°C
85%RH or less

Storage temperature range : -20 to +60°C

Power supply : The power voltage of the analyzer is set at the delivery according to the customer's ordering information.

Option No.	Standard	44
Line voltage (V)	90 to 132	198 to 250

48 to 66Hz

R3361CN : Line voltage range 90 to 132VAC or 198 to 250VAC is automatically selected internally.
48 to 66Hz

Power consumption	: 220VA or less
Dimensions	: Approx. 330(W) x 177(H) x 450(D) mm
Mass	: Approx. 17kg

(10) Options and Accessories

Option

OPTION 02	RS-232 interface
OPTION 04	Occupied bandwidth measurement/Adjacent channel leakage power measurement
OPTION 12	Gated sweep function
OPTION 15	Controller function (Parallel I/O, Serial I/O)
OPTION 70	Multi-marker function
OPTION 72	Printer output
OPTION 80	RS-232 interface/Gated sweep function
OPTION 81	Controller function/Gated sweep function

Separate accessory

R3551	EMI preselector
R16211	Carring case
A02804	Front cover
A09505	Memory card (32k byte, 5 pieces)
A09506	Memory card (128k byte, 5 pieces)
A02034	Panel Mount Kits
A02255	Rack Mount Kits (JIS)
A02455	Rack Mount Kits (EIA)

2.6 R3361B/D Specifications

(1) Frequency Specifications

Measurable bandwidth : 9kHz to 3.6GHz

Center frequency setting increment
: 1Hz

Center frequency indication accuracy:
±(3% of the span + center frequency x reference oscillator accuracy + 20Hz)
(span _ 2MHz)
±(2% of the span + center frequency x reference oscillator accuracy + 50kHz)
(span 2MHz)

Reference oscillator : Internal or external input (10Hz)

Internal reference oscillator accuracy
Aging : ±(2 x 10^{-8} per day)
±(1 x 10^{-7} per year)
Temperature stability ±5 x 10^{-8} (from 0°C to +50°C, +25°C as a reference)

Frequency span
LIN mode : 1kHz to 3.6GHz and 0
LOG mode : 1, 2, or 3 decades of span can be selected within the range from 10kHz to 1000MHz.

Frequency span accuracy
LIN mode : ±3% of the span (span > 2MHz)
±5% of the span (span ≦ 2MHz)

Frequency stability
Residual FM : 50kHz p-p or less (span > 10MHz)
2kHz p-p or less (10MHz ≧ span > 2MHz)
20Hz p-p or less (span ≦ 2MHz)
Frequency drift : 300Hz/min. or less (span ≦ 2MHz, at a constant temperature after an hour of warming up)

Side band noise : ≦ -105dBc/Hz f ≦ 3.0GHz
≦ -101dBc/Hz f ≦ 3.6GHz
(20kHz offset)

Resolution
3dB bandwidth : 30Hz to 1MHz, switched 1 to 3 steps
6dB bandwidth : 200Hz, 9kHz, 120kHz
Selectivity : ≦ 15 : 1 (60dB : 3dB)
Bandwidth accuracy : ±20%

Marker accuracy
- Normal mode : Center frequency indication accuracy + span accuracy
- Counter mode : Indicated frequency x reference oscillator accuracy ±1 count (Excepting TG mode)

(2) Amplitude Specifications

Amplitude measurement range
: -130dBm to +25dBm

Screen display range
- LOG mode : 120dB (10dB/div)
  : 80dB (10dB/div)
  : 50dB (5dB/div)
  : 20dB (2dB/div)
  : 10dB (1dB/div)
- LIN mode : 10div
- QP mode : 80dB (10dB/div) Provided the measurement range is 70dB

Linearity display
- LOG mode : ±2.0dB/110dB, ±1.5dB/70dB, ±1.0dB/10dB, ±0.2dB/1dB
- LIN mode : ±5% of the fullscale
- QP mode : ±2.0dB/70dB, ±1.0dB/40dB

Reference level indication range
: -109.9dBm to +40.0dBm
0.715μV to 22.4V

Reference level accuracy : ±0.3dB 0 to -50dBm
±0.7dB +20 to -70dBm

Dynamic range
- Average noise level : -121dBm + 1.55f(GHz)dB (Resolution bandwidth 300Hz, video bandwidth 1Hz, input attenuator 0dB, frequency 1MHz or more)
- Secondary, tertiary distortion : ≦ -70dB -30dBm input (Input attenuator 0dB, frequency 10MHz or more)
- Frequency response : ±0.5dB (100kHz to 2GHz)
  ±1.0dB (9kHz to 3.6GHz)
  (LOG mode, input attenuator 10dB, 20 to 30°C)
- Residual response : ≦ -100dBm (Input attenuator 0dB, 50Ω terminator, frequency 500kHz or more)

Resolution bandwidth switching accuracy
: ±0.3dB (after automatic calibration)

Video filter : 1Hz to 1MHz (switched 1 to 10 steps)

(3) Sweep Specifications

Sweep time : 30msec to 1000sec and Manual sweeping

Sweep time accuracy : ≦ 3%

Trigger mode : FREE RUN, LINE, VIDEO, EXT, TV-V, SINGLE

(4) Input Specifications

Input impedance : Approx. 50Ω
: VSWR ≦ 1.5 100kHz ≦ f ≦ 2GHz
: VSWR ≦ 2.0 9kHz ≦ f ≦ 3.6GHz
: Input attenuator ≧ 10dB reference

Input connector : N connector

Maximum input level : +25dBm (input attenuator ≧ 30dB)
±50VDC max

Input attenuator : 0 to 50dB (10dB steps)

Input attenuator switching accuracy
: ±1.0dB (≦2.0GHz)
±1.5dB (≦3.6GHz)
Input attenuator 10dB standard

Detection mode : NORMAL, POSI, NEGA, SAMPLE

(5) Tracking generator specifications

Frequency range : 9kHz to 3.6GHz

Output level range : 0dBm to -50dBm Setting can be done in steps of 1dB.

Output level accuracy : ±0.5dB (30MHz, -10dBm, +20 to +30°C)

Output level flatness : ±0.7dB (100kHz to 1.0GHz)
±1.5dB (9kHz to 2.6GHz)
±2.0dB (9kHz to 3.6GHz)
(-10dBm output)

Output level switching accuracy	: ±1.0dB (100kHz to 1.0GHz) ±2.0dB (9kHz to 2.6GHz) ±3.0dB (9kHz to 3.6GHz) (-10dBm reference)
Output spuriousness	: Harmonics spurious level ≦ -20dB Non-harmonics spurious level ≦ -30dB (Output level 0dBm)
TG leakage	: ≦ -110dBm (frequency ≦ 3.0GHz) : ≦ -100dBm (frequency ≦ 3.6GHz)
Output impedance	: Approx. 50Ω
Output VSWR	: ≦ ±1.5 (100kHz to 2.0GHz) ≦ ±2.0 (9kHz to 3.6GHz) (At ≦ -10dBm output)
Output connector	: N-connector

(6) Output Specifications

External memory function	: IC memory card
Video output	: Approx. 1Vp-p, approx. 75Ω, composite
Sound monitor output	: The AM and FM sound can be monitored with an approximately 8Ω earphone.
Power supply for probes	: ±15V, 4-pin connector
Recorder output	: X axis approx. -5 to +5V, output impedance approx. 10kΩ Y axis approx. 0 to +4V, output impedance approx. 220Ω
GPIB data output/ Remote control	: The built-in GPIB interface allows data output and remote control.
Direct plot	: Also, the built-in GPIB interface allows an output of on-screen data to the R9833 plotter to have a hardcopy.
Printer output	: The built-in GPIB interface allows HP2225AJ to output a hard copy of on-screen data.

(7) Indication Specifications

Indicated items : Waveforms, setting conditions, grid, label

CRT display unit : 5.5 inch

Trace : Two screens of A and B

WRITE : Signal response from the analyzer is indicated at every sweeping.

VIEW : The WRITE waveform contained in the memory, or other contents in the memory are displayed.

MAX HOLD : Indication of maximum signal level during repeated sweeping

AVG : Indication of average signal level during repeated sweeping

(8) Other functions (R3361D only)

Occupied bandwidth measurement/Adjacent channel leakage power measurement

Multi-marker function

(9) General Specifications

Using ambient conditions : 0 to 50°C
85%RH or less

Storage temperature range : -20 to +60°C

Power supply : The power voltage of the analyzer is set at the delivery according to the customer's ordering information.

Option No.	Standard	44
Line voltage (V)	90 to 132	198 to 250

48 to 66Hz

R3361D : Line voltage range 90 to 132VAC or 198 to 250VAC is automatically selected internally.
48 to 66Hz

Power consumption	: 220VA or less
Dimensions	: Approx. 330(W) x 177(H) x 450(D) mm
Mass	: Approx. 17kg

(10) Options and Accessories

Option

OPTION 02	RS-232 interface
OPTION 04	Occupied bandwidth measurement/Adjacent channel leakage power measurement
OPTION 12	Gated sweep function
OPTION 15	Controller function (Parallel I/O, Serial I/O)
OPTION 70	Multi-marker function
OPTION 72	Printer output
OPTION 80	RS-232 interface/Gated sweep function
OPTION 81	Controller function/Gated sweep function

Separate accessory

R3551	EMI preselector
R16211	Carring case
A02804	Front cover
A09505	Memory card (32k byte, 5 pieces)
A09506	Memory card (128k byte, 5 pieces)
A02034	Panel Mount Kits
A02255	Rack Mount Kits (JIS)
A02455	Rack Mount Kits (EIA)

3. THEORY OF OPERATION

This section describes the R3261/3361 series of spectrum analyzers and their operation. This section describes the components of the R3261/3361 analyzers and their functions, and briefly explains how spectrum analyzers work.

3.1 How a Spectrum Analyzer Works

A spectrum analyzer is a device that graphically displays the energy distribution of the frequencies that make up a signal. The signal's spectrum is represented by a line whose vertical displacements show the amplitude of the signal at each frequency, as shown in Figure 3–1.

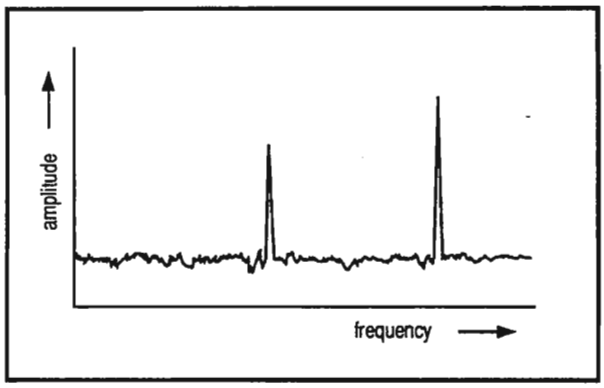

Figure 3–1 Typical Spectrum Analyzer Display

A spectrum analyzer uses circuitry similar to that in a superheterodyne radio receiver. The analyzer mixes the input signal with the signal from a swept local oscillator to produce an IF signal whose amplitude determines the vertical displacement of the line on the display. The local oscillator sweeps through a range of frequencies, thus changing the narrow frequency band being amplified at any time. The horizontal displacement of the displayed spectrum line is synchronized with the local oscillator frequency.

3.2 R3261/3361 Configurations

The R3261/3361 series of spectrum analyzers includes 8 models: R3261A/C, R3261B/D, R3361A/C, and R3361B/D. Table 3-1 summarizes the configurations of the 8 models, and shows the frequency bands that can be analyzed by each. The R3361 models also include a tracking generator (TG).

Table 3-1 R3261/3361 Configurations

Model	Frequency range		TG
	9kHz - 2.6GHz	9kHz - 3.6GHz	
R3261A/C	✓		
R3261B/D		✓	
R3361A/C	✓		✓
R3361B/D		✓	✓

3.3 How the R3261/3361 Works

Figure 3–2 (on the following page) shows a block diagram of the R3261/3361. The primary signal path through the R3261/3361 analyzer is as follows: The signal received by the analyzer (RF IN in the block diagram) passes through an input attenuator, and is mixed with a swept signal from the first local oscillator to produce the first IF signal (4.066 GHz). (The first local oscillator's frequency is controlled by a ramp signal from the CPU.) The first IF signal passes through three additional mixers to produce the fourth IF signal (3.58 MHz). This signal then passes through a logarithmic amplifier and an analog-to-digital converter, and is used by the CPU to control the vertical displacement of the spectrum line on the CRT.

The pages following Figure 3–2 describe in detail this process and the analyzer's components and their functions.

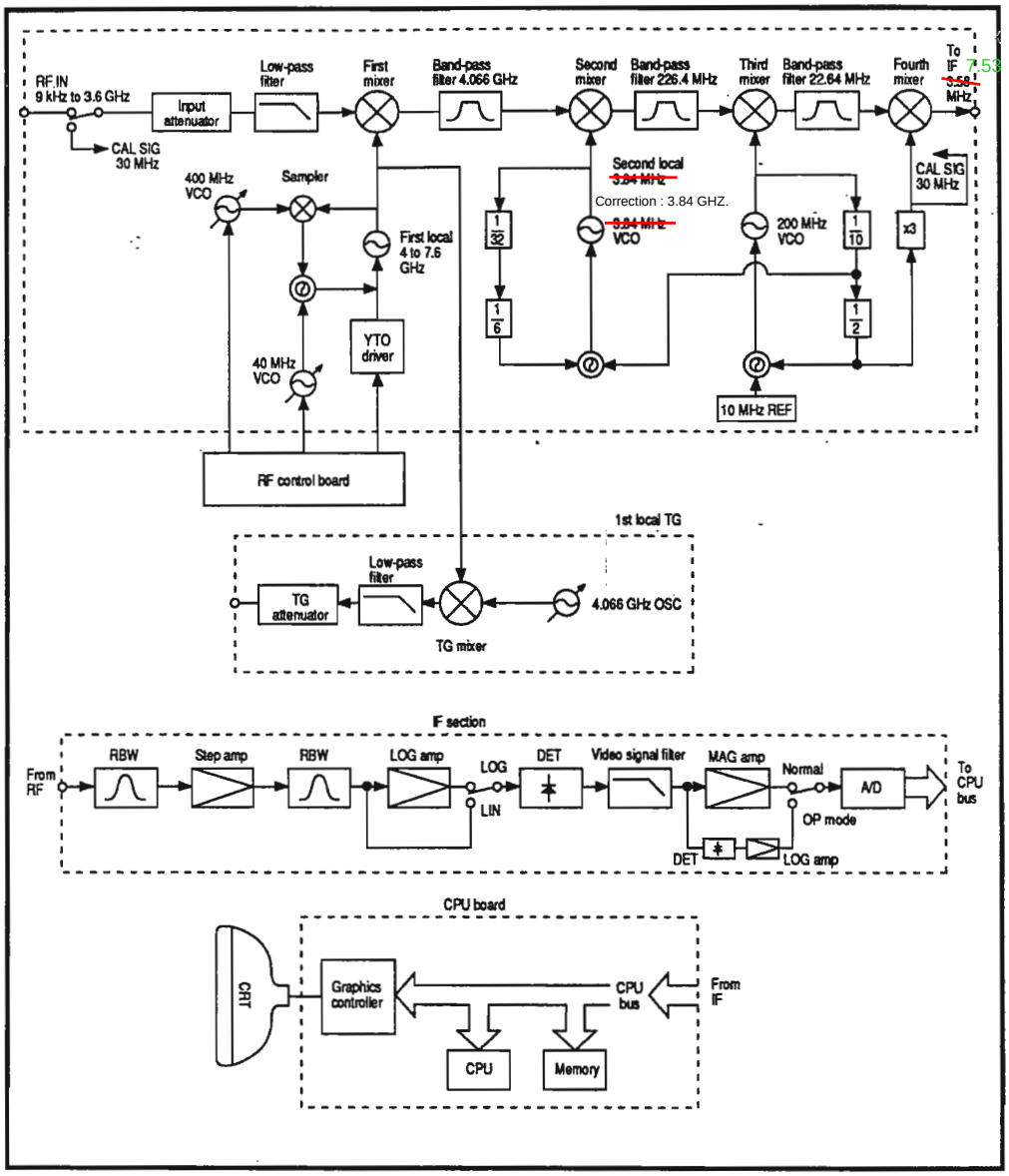

Figure 3–2 R3261/3361 Block Diagram

3.3.1 The Input Attenuator

Figure 3–3 below shows a circuit diagram of the R3261/3361 input attenuator.

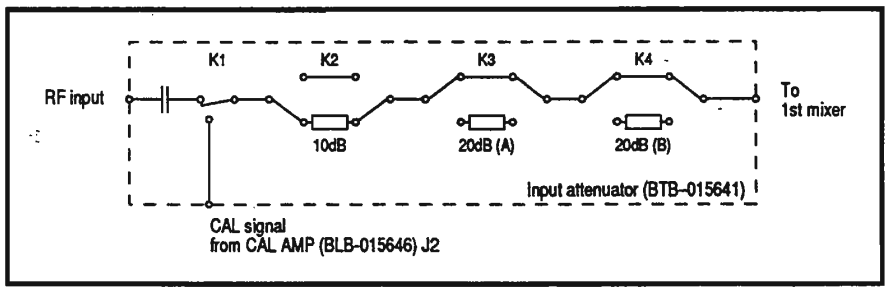

Figure 3–3 Input Attenuator

The input attenuator combines one 10 dB and two 20 dB attenuators to form an attenuator that can be set from 0 to 50 dB in 10 dB increments. The CPU controls the 10 dB and 20 dB attenuators according to the Input Attenuator setting. This setting has two operating modes: an automatic mode that sets the attenuator according to the reference level, and a manual mode that sets the attenuator according to front panel switch settings. Table 3–2 shows these switch settings.

Table 3–2 Attenuator Switch Settings

Attenuator Setting	10 dB K2	20 dB (A) K3	20 dB (B) K4
0 dB			
10 dB	on		
20 dB		on	
30 dB	on	on	
40 dB		on	on
50 dB	on	on	on

on = switch set to the attenuator position.

Unlike conventional spectrum analyzers, the R3261/3361 does not use an external calibration signal. Instead, the R3261/3361 has a self-calibration function that uses an internal calibration signal (see Section 4.1.2). The K1 switch selects this internal signal.

3.3.2 First Mixer/Coupler

Figure 3–4 shows the first mixer/coupler.

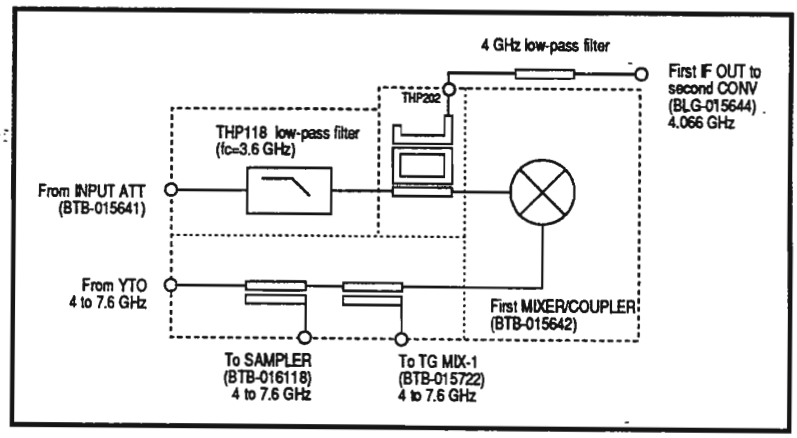

Figure 3–4 First Mixer/Coupler

The first local oscillator signal generated by the YTO (4 to 6.4GHz for the R3261A,C/3361A,C, 4 to 7.6GHz for the R3261B,D/3361B,D) is distributed to the sampler and the TG MIX-1 circuitry before passing to the first mixer/coupler. The input signal from the INPUT ATT terminal passes through the low-pass filter to the mixer/coupler, where it is combined with the first local oscillator signal mix to generate the first IF signal (4.066 GHz). The IF signal then passes through a 4 GHz low-pass filter to the second CONV board (BLG-015644).

Once the SMA connector is active with the YTO output signal, it is possible to check the level and frequency of the first local by removing the SMA connector (frequency range: 4 GHz – 7.6 GHz, level at 4 GHz: 8 dBm).

3.3.3 Second Mixer/Second Local

Figure 3–5 shows the second mixer/second local oscillator.

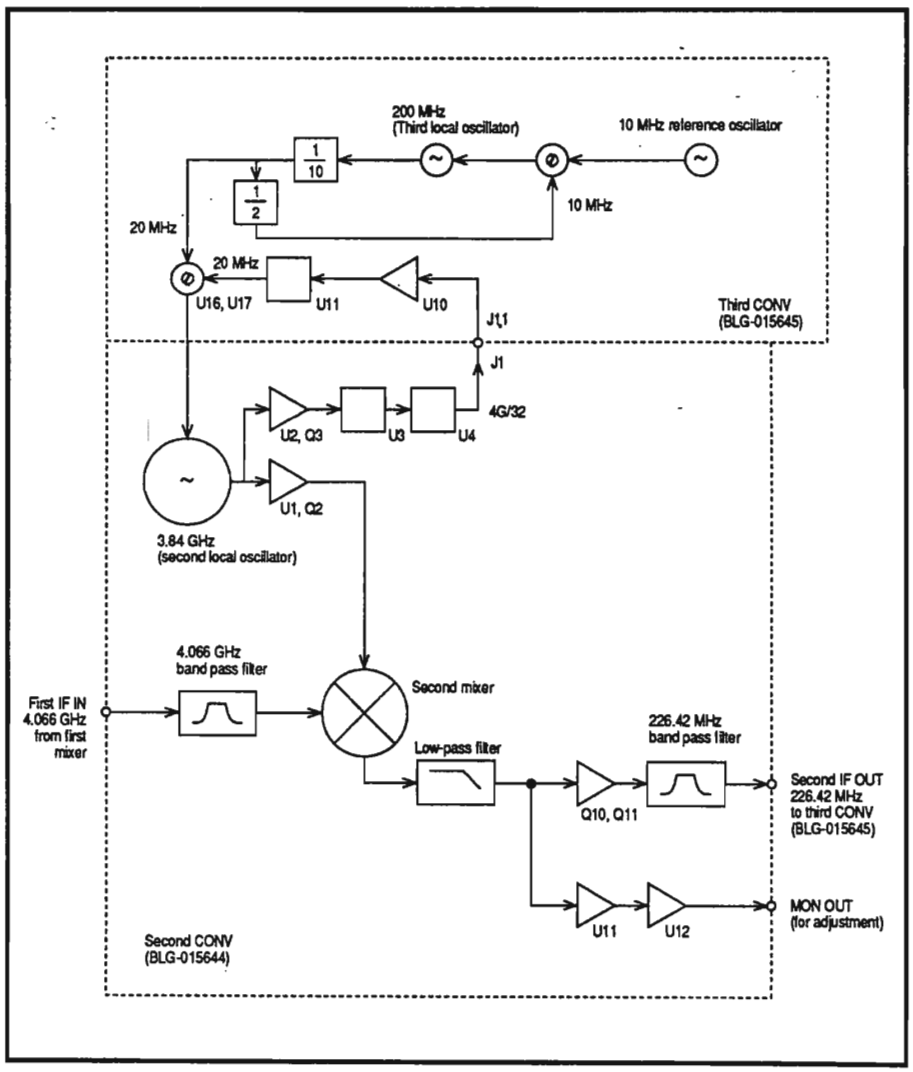

Figure 3–5 Second Mixer/Second Local Oscillator

The first IF signal (4.066 GHz) passes through a 4.066 GHz band-pass filter to the second mixer, where it combines with the second local oscillator signal (3.84 GHz) to create the second IF signal (226.42 MHz). (Note that this intermediate frequency is the difference between 4.066 GHz and 3.84 GHz.) The second IF signal is then amplified by Q10 and Q11 and sent through a 226.42 MHz band-pass filter to the third converter.

The second local oscillator is phase-locked to the internal reference oscillator through the phase-locked loop (P.L.L.) circuit of the third CONV. The monitor out (MON OUT) signal is used to measure the second IF signal and the second local oscillator signal.

Since the second local output is unavailable directly, check for oscillation by monitoring the local leakage signals at the second mixer output (frequency: 3.84 GHz, level: –39 dBm).

Figure 3–6 shows the spectrum distribution of the signal at the MON OUT terminal.

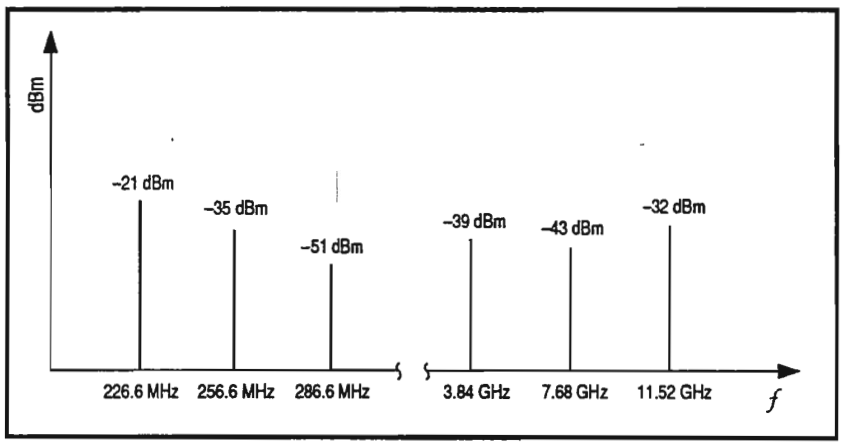

Figure 3–6 Spectrum Distribution at the MON OUT Terminal

3.3.4 Third and Fourth Mixers and Local Oscillators

Figure 3–7 shows the third and fourth mixers and local oscillators.

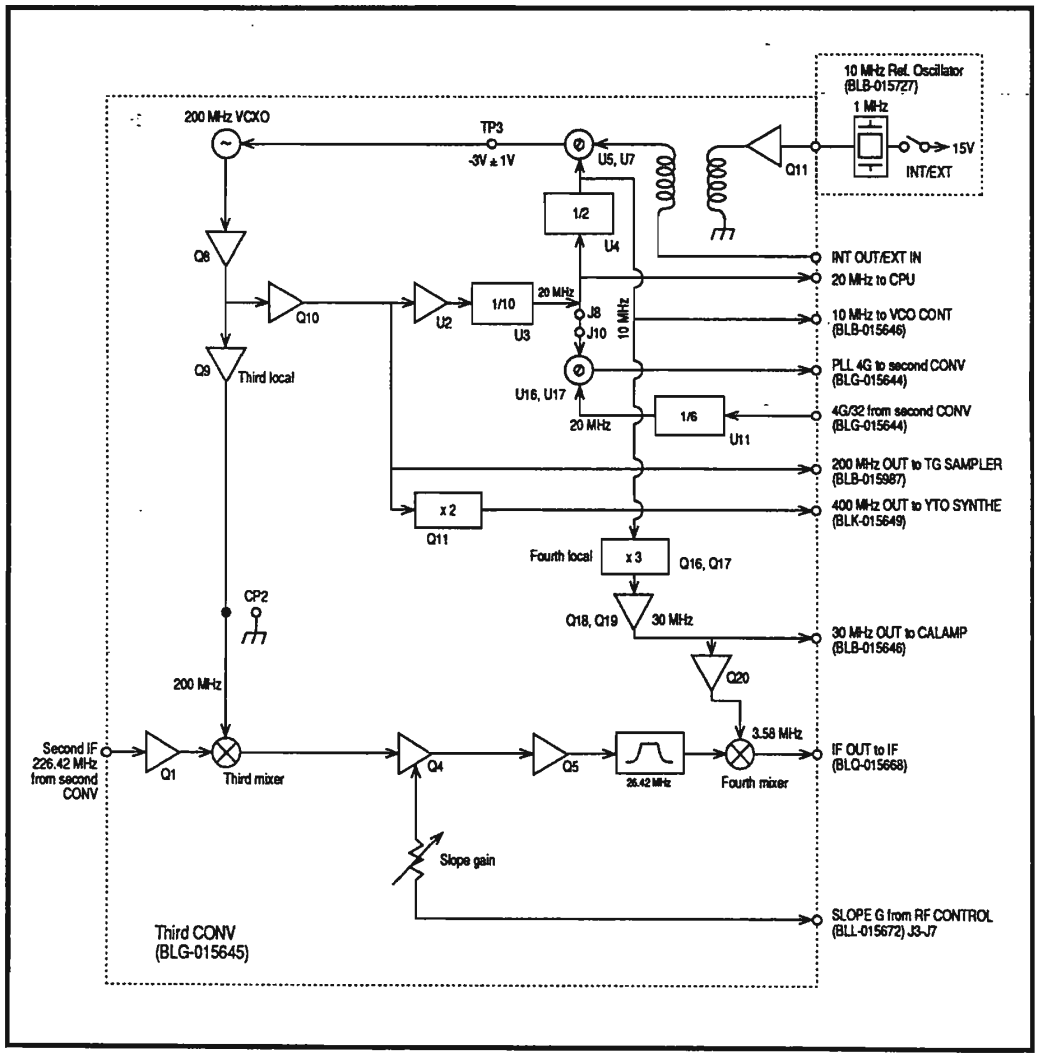

Figure 3–7 Third and Fourth Mixers and Local Oscillators

Third local oscillator

The third local oscillator is a 200 MHz crystal oscillator that is phase-locked to either the built-in reference oscillator or the external reference input. (The phase lock voltage for the 200 MHz signal is –3 VDC ±1 VDC at TP3.) The 200 MHz signal from this oscillator is used as the reference signal for generating the frequencies used by the local oscillators at all other mixer stages.

The frequency multiplier (Q11 and other components not shown in Figure 3–7) multiplies the 200 MHz signal by two and supplies the resulting signal to the YTO SYNTHE board (BLK–015649).

Check the level of the third local oscillator signal by using the TG sampler signal at the third CONV P5 or the UM cable exit on the TG side (frequency: 200 MHz, level: –5 dBm).

Third mixer

The third mixer combines the second IF signal (226.42 MHz) and the third local oscillator signal (200 MHz) to generate the third IF signal (26.42 MHz).

Third IF/filter

The third mixer output signal (third IF signal) passes through the low-pass filter, through a slope gain amplifier (Q4), and through a total gain amplifier (Q5). The amplified signal then passes through the third IF band-pass filter to the fourth mixer.

Fourth local oscillator

The fourth local oscillator signal (30 MHz) is generated by dividing the third local oscillator frequency (200 MHz) by 20 and multiplying the resulting signal by three. The fourth local oscillator signal is also used as the CAL signal.

Check the fourth local oscillator signal by using the CAL AMPLIFIER signal at the third CONV J6 (frequency: 30 MHz, level: 4 dBm).

Fourth mixer

The fourth mixer combines the third IF signal (26.42 MHz) and the fourth local oscillator signal (30 MHz) to produce the fourth IF signal (3.58 MHz) at IF OUT.

Second local oscillator P.L.L.

The second CONV supplies the second local oscillator signal (3.84 GHz) divided by 32. U11 further divides the signal by 6 to produce a 20 MHz signal. The digital phase detector (U16 and U17) compares the 20 MHz signal with the output of the divider, U3. U16 and U17 provide the proper signal by dividing the third local oscillator signal by 10. The second local oscillator is now locked in phase.

Reference oscillator

The 10 MHz reference frequency for the local oscillators is either an internal crystal-controlled oscillator or an external oscillator signal supplied to the INT/EXT connector. The oscillator used is selected by the INT/EXT switch on the rear panel.

3.3.5 IF Step Amplifiers

Figure 3–8 shows the IF step amplifiers.

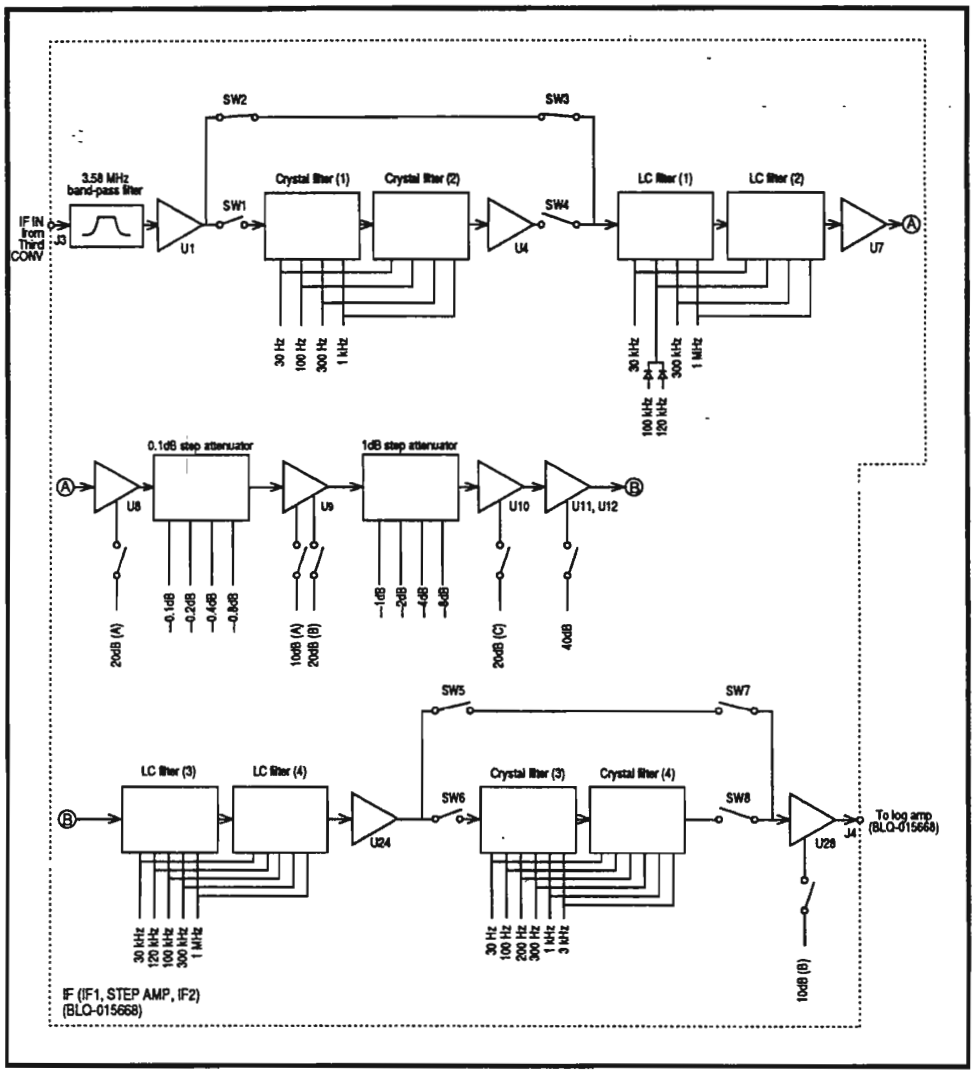

Figure 3–8 IF1 and IF2 Step Amplifiers

The step amplifier consists of two fixed attenuators (0.1 dB step and 1 dB step) and six fixed-gain amplifiers: two 10 dB amplifiers (U28 and U9), three 20 dB amplifiers (U8, U9, and U10), and one 40 dB amplifier (U11). The attenuation is controlled by the INPUT ATT and REF LEVEL settings. Both attenuators are set automatically by the CAL data, which includes data for MAG accuracy, RBW switching accuracy, and frequency characteristics correction.

The latch IC (U42) supplies the RBW select signal to the IF filters. Table 3–3 shows the RBW setup signal for each U42 output pin, and summarizes the RBW setup, the corresponding filters, and the LC/X'tal switch setup (U42 output).

Table 3–3 RBW Setup

RBW Setup		U42 Pin No. 6	5	4	64	61	60	59	55	54	3	56	7	8
L/C	1 MHz	●											●	●
	300 KHz		●										●	●
	100 KHz			●									●	●
	30 KHz				●								●	●
	10 KHz												●	●
X'tal	3 KHz					●								
	1 KHz						●							
	300 Hz							●						
	100 Hz								●					
	30 Hz									●				
QP	120 KHz										●		●	●
	9 KHz													●
	200 Hz											●		

1) ● = 0V, blank = 5V

2) Pin 7: 0V SW2 = SW3 = on, SW1 = SW4 = off

3) Pin 8: 0V SW5 = SW7 = on, SW6 = SW8 = off

Table 3–4 shows the relationship between the REF LEVEL and the step amplifier settings.

Table 3–4 REF LEVELs and Step Amplifier Settings

REF LEVEL	10 dB (A)	10 dB (B)	20 dB (A)	20 dB (B)	20 dB (C)	40 dB
0 dBm						
–10 dBm	✔					
–20 dBm			✔			
–30 dBm	✔		✔			
–40 dBm			✔	✔		
–50 dBm	✔		✔		✔	
–60 dBm			✔	✔	✔	
–70 dBm	✔		✔			✔
–80 dBm			✔	✔		✔
–90 dBm		✔	✔	✔		✔

1) ✔ = on, blank = off

2) This table shows the setup condition with the dynamic range set to 80 dB and the INPUT ATT set to 10 dB.

3.3.6 LOG/QP

Figure 3–9 shows the LOG/QP circuitry.

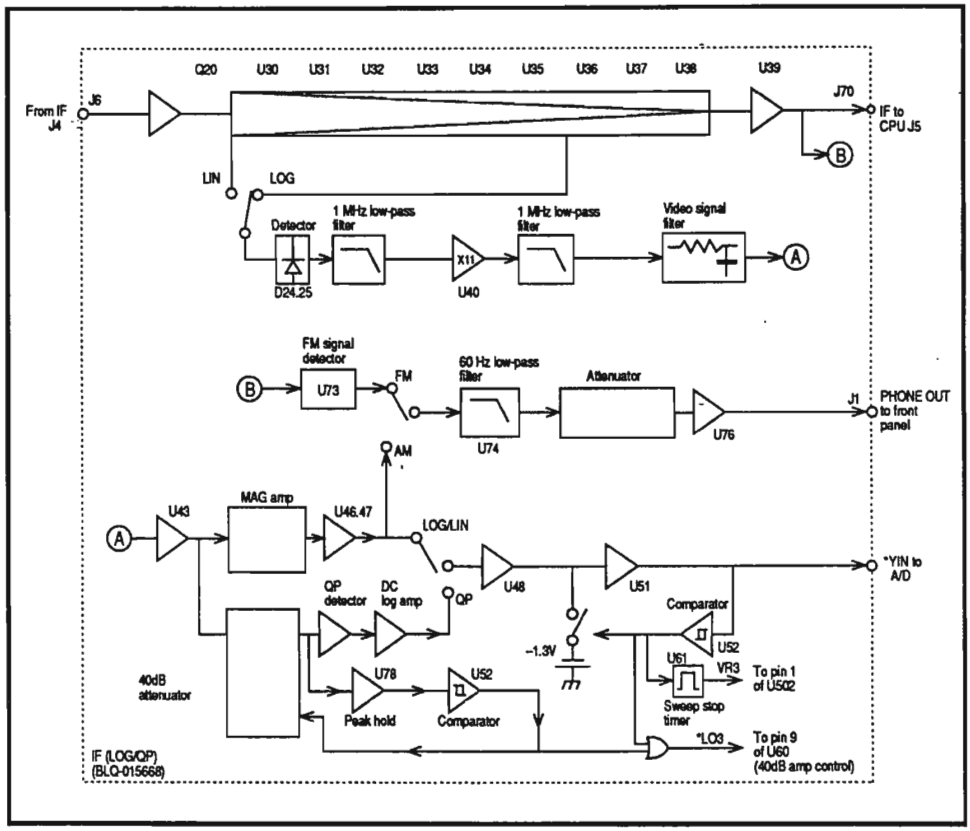

Figure 3–9 LOG/QP

LOG amplifier

The LOG amplifier uses nine stages of serial hybrid ICs to provide 80 dB of dynamic range. The signal is rectified and passed through the low-pass and video filters before being passed to the MAG amplifier (which is a switchable gain amplifier). In the linear (LIN) mode, the signal goes directly to the detector without going through the logarithmic (LOG) amplifier. The video filter can be switched in seven stages between 1 Hz and 1 MHz.

MAG amplifier, PHONE OUT, and 120dB display

The MAG amplifier forms the 1/2, 1/5 and 1/10 attenuators that divide the LOG amplifier output to generate the 5 dB/div, 2 dB/div, and 1 dB/div signals. In the 0.5 dB/div, 0.2 dB/div, and 0.1 dB/div modes, the IF signal bypasses the LOG amplifier and instead passes through the LIN amplifier.

The R3261/3361 provides AM and FM audio output to the front panel PHONE terminal. The FM decoding mode uses the FM detector. AM and FM modes pass signals through the low-pass filter and attenuator to provide voice level control.

The comparator (U52) detects the ON/OFF level of the 40 dB amplifier during a 120 dB dynamic range display (see Section 3.3 and Figure 3–2), and the sweep stop timer (U61) stops sweeping during ON/OFF switching of the 40 dB amplifier.

QP (for 70dB display)

The R3261/3361 has a QP (quasi-peak) measuring section that consists of a QP detector and a DC LOG amplifier. To increase the dynamic range of the QP detector, the signal is attenuated by the 40 dB attenuator before passing through the QP detector, and amplified by the DC LOG amplifier after passing through the QP detector.

3.3.7 Analog-to-digital Conversion and Ramp Generator

Figure 3–10 (on the following page) shows the analog to digital (A/D) conversion and ramp generator circuitry.

Ramp generator

U503 and U504 form the CPU-programmable ramp generator. When the CPU sends data to determine the sweep time, U503 automatically sends the corresponding digital data to U504. Since U504 receives continuous digital data, the result is a ramp waveform output.

A/D conversion

The LOG amplifier output (*Y IN) passes through the POSI/NEGA (positive/negative) peak hold circuit and then the A/D converter U535. The comparators U527 and U528 form the slope detect circuit. (The slope is used to trigger the Peak Hold circuit.)

Trigger signal detection

U538-1, U538-2, U539-2, and U546-1 generate the VIDEO trigger signal. An integrator circuit formed by an electronic switch, a capacitor, and U539-1 detects the vertical sync signal in the TV signal. Once detected, this signal is used as the TV-V trigger; the power unit provides the LINE trigger.

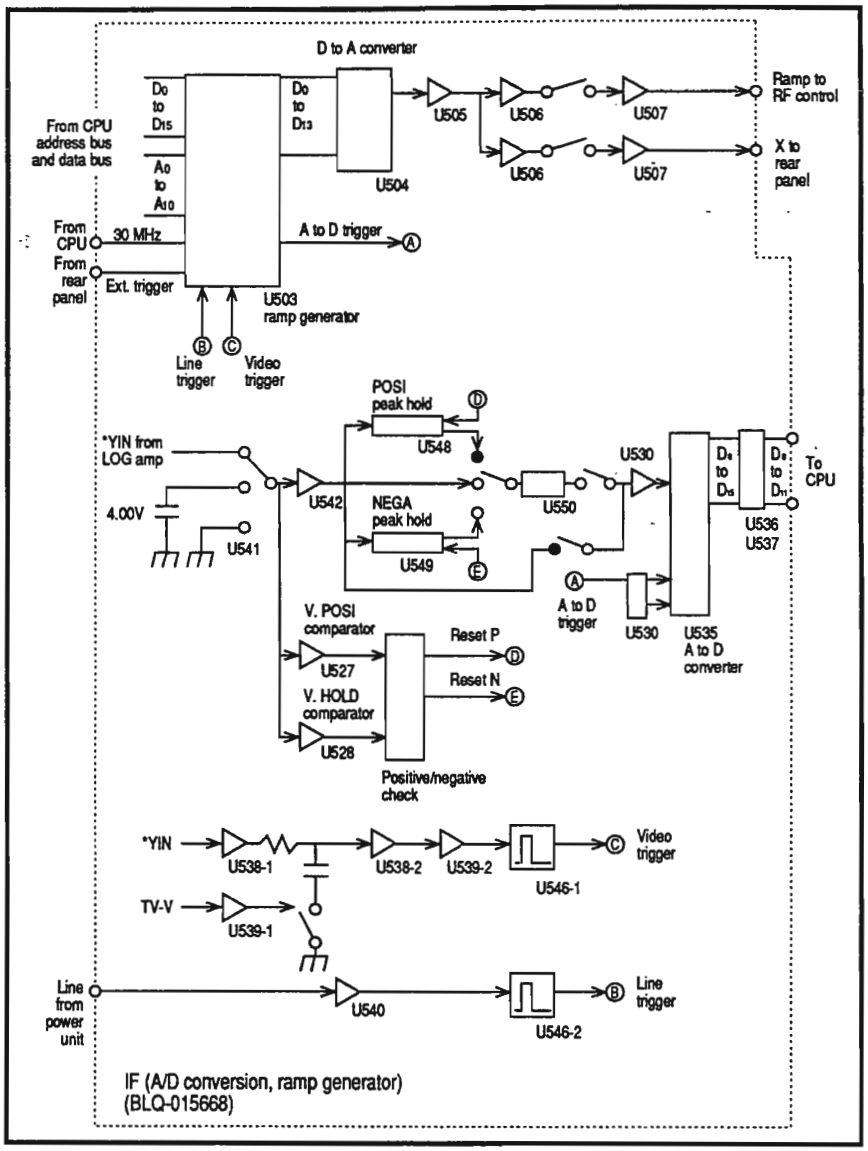

Figure 3–10 A/D Conversion and Ramp Generator

3.3.8 First Local Oscillator

Figure 3–11 shows the first local oscillator. The oscillator has four different operations, controlled by the SPAN front-panel setting.

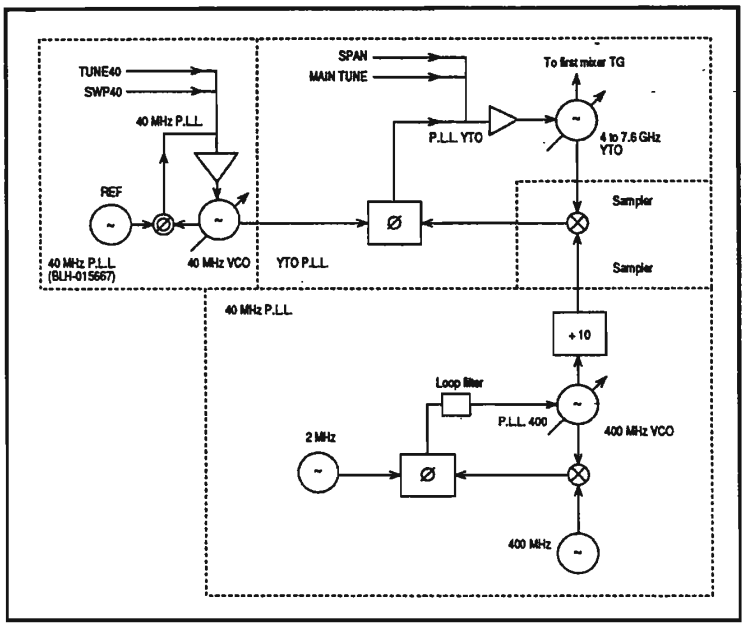

Figure 3–11 First Local Oscillator

Table 3–5 shows the SPAN settings for each of the four oscillator operations.

Table 3–5 SPAN Setting and P.L.L. Functions

SPAN	YTO P.L.L.	400 MHz P.L.L.	40 MHz P.L.L.	Sampler
3.6 GHz – 500 MHz	free run	not used	not used	off
499 MHz – 2.01 MHz	free run/locked	locked	locked	on: sweep end only
2 MHz – 1 KHz	locked	locked	free run/locked	on
0 Hz	locked	locked	locked	on

1) free run: local oscillator sweeps.

2) free run/locked: once locked on the sweep end the voltage is held by the sample hold circuit. The voltage is then applied to the local oscillator on the next sweep to improve the accuracy of the center frequency.

400MHz P.L.L.

Figure 3–12 (on the following page) shows the circuit diagram for the 400 MHz P.L.L., one of the major components of the first local oscillator. The 400 MHz P.L.L. has the following characteristics:

- The 400 MHz VCO is locked in phase with the reference oscillator.
- U10 is a divider for 1/8 and 1/9 (see Figure 3–12).
- U11 contains two programmable dividers.
- U10 and U11 (1/2) combine to form a swallow counter that constitutes the 1/N divider.
- U11 (2/2) is the 1/M divider.
- If the YTO lock is OFF, the loop filter turns Q1 OFF by changing Q1's bias to prevent the sampler from receiving signals.
- The division ratio is set by the M and N data provided by the CPU (at U11).
- The CPU can switch the loop filter to four-way operations, depending on the N value (see Table 3–6). This gives the first local oscillator better phase noise characteristics in different operating modes.

Table 3–6 400MHz VCO Loop Filter Settings

	SPAN setting			
	N ≤ 89			
Switch	M ≤ 27	M ≥ 28	N ≤ 139	N ≤ 261
NAR400N	off	on	off	off
NAR400W	on	off	on	off

1) M: integer degree variable (19–37)

2) N: integer division variable (62–261)

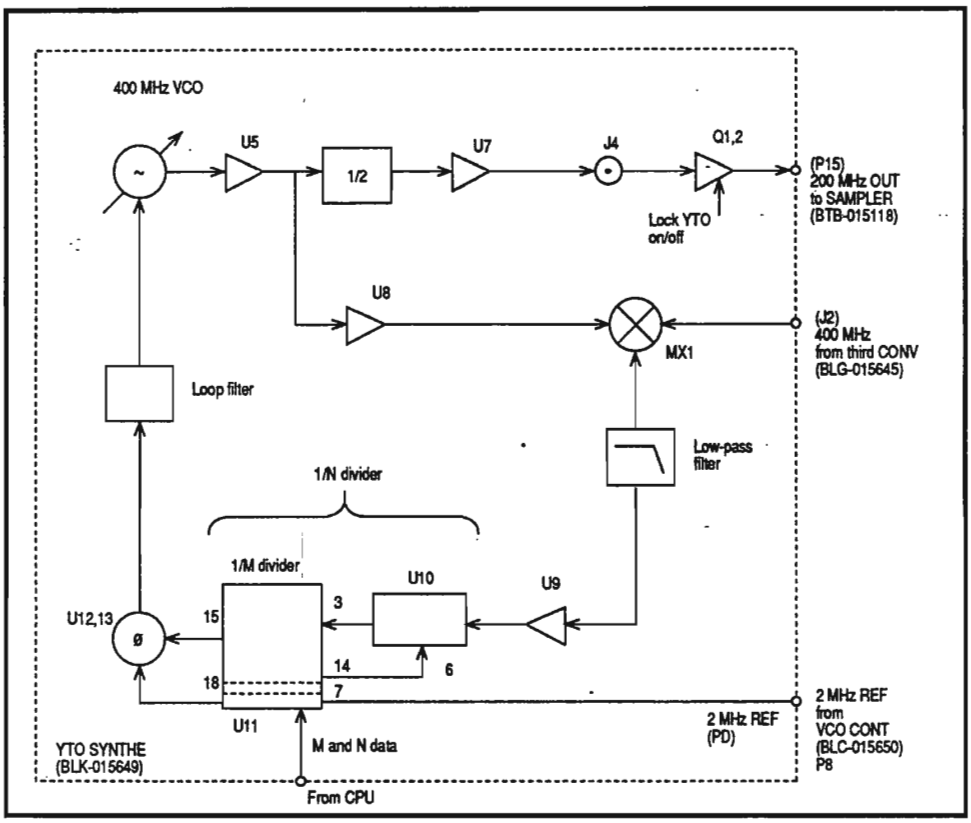

Figure 3–12 400MHz P.L.L.

YTO P.L.L.

Figure 3–13 shows the YTO P.L.L.

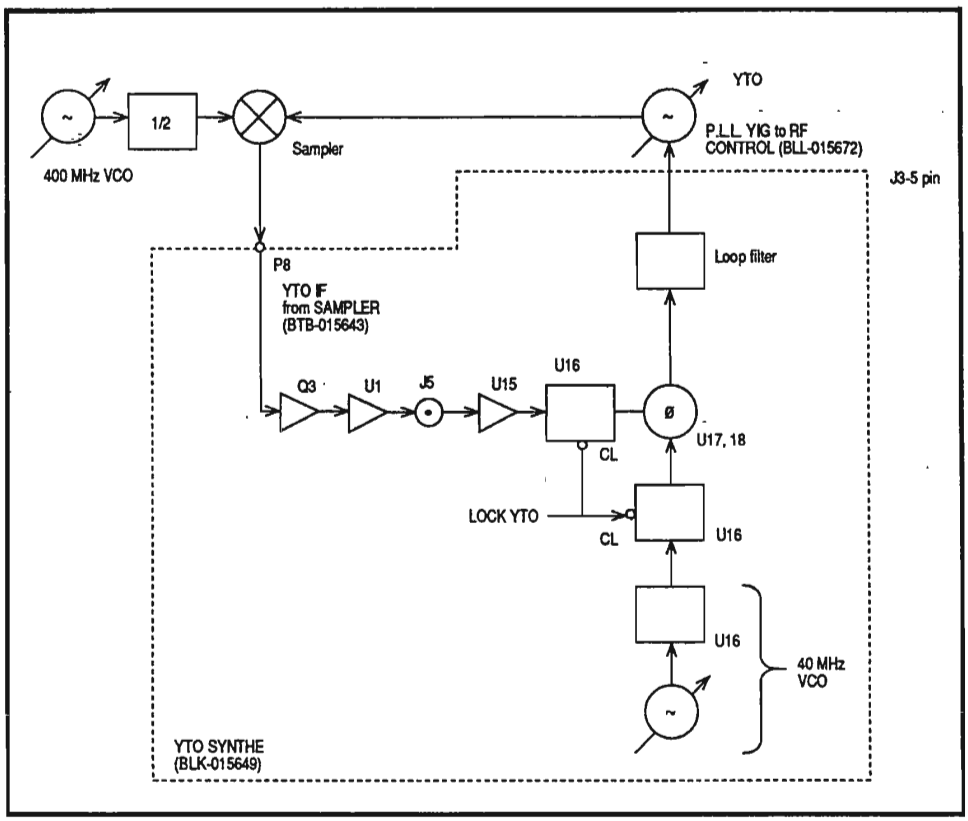

Figure 3–13 YTO P.L.L.

In some sweep modes the first local oscillator is locked only at the end of the sweep. To avoid drift, the YTO IF signal and the 40 MHz VCO signal lock the YTO P.L.L. in phase. If drift cancel is active (lock is OFF), the YTO lock is used as the sample hold circuit.

The YTO P.L.L. loop filter is adjusted by the SPAN setting, which is set at NAR YTO. Table 3–7 shows the filter settings.

Table 3–7 YTO P.L.L. Loop Filter Settings

	SPAN setting	
Switch	≥ 10 KHz	≤ 9.9 KHz
NAR YTO	ON	OFF

When the SPAN setting is 400 MHz VCO and YTO is in free run (see Table 3–5), U16 is made CLEAR to break the lock loop.

40MHz P.L.L.

The 40 MHz VCO generates signals at 380 MHz. The signals are then divided by U25 and the resulting signal is passed to the YTO P.L.L.

The VCO CONT (BLC–015650) U1 is a sample hold circuit used to cancel drift when the 40 MHz P.L.L. is free-running. The P.L.L. voltage (P.L.L. 40), the TUNE voltage (TUNE 40), and the sweep voltage (SWP40) are all summed and linearized in U3. The signals are then passed to the 380 MHz VCO.

3.3.9 RF Control

Figure 3–14 (on the following page) shows the RF control circuitry. This circuitry converts the signals from the ramp generator to sweep signals for the YTO main, the YTO FM, and the 40 MHz VCO (see Figure 3–13). The D/A converter (U8) attenuates the ramp signals to an adjustable reference voltage. Because of its operation U8 is regarded as a programmable attenuator.

D/A converters U12 and U11 generate the 40 MHz VCO TUNE voltage, and D/A converter U10 controls the CAL signal level. The LOG SPAN (a sweep mode that displays output on an analog scale) uses the LIN-LOG circuit Q1. LOG SPAN is set from the front panel.

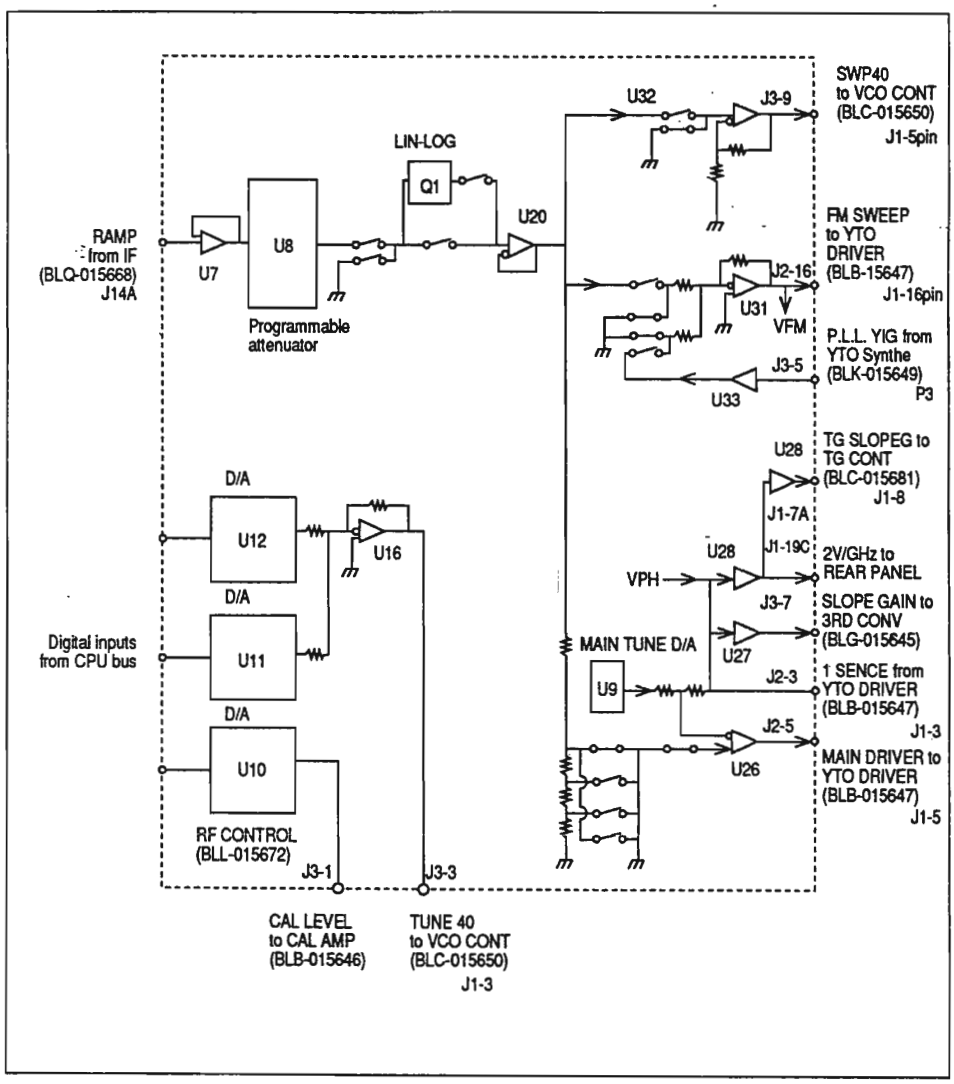

Figure 3–14 RF Control

3.3.10 YTO Driver

Figure 3–15 shows the YTO and YTO driver circuitry. This circuitry converts the YTO driving voltage to current for use by the MAIN and FM circuitry (see YTO P.L.L. in Section 3.3.8). When the SPAN setting is 10 MHz or less, capacitor C7 and the MAIN coil operate as a noise filter. When the filter is OFF the capacitor charges and discharges through U2 to prevent frequency drift.

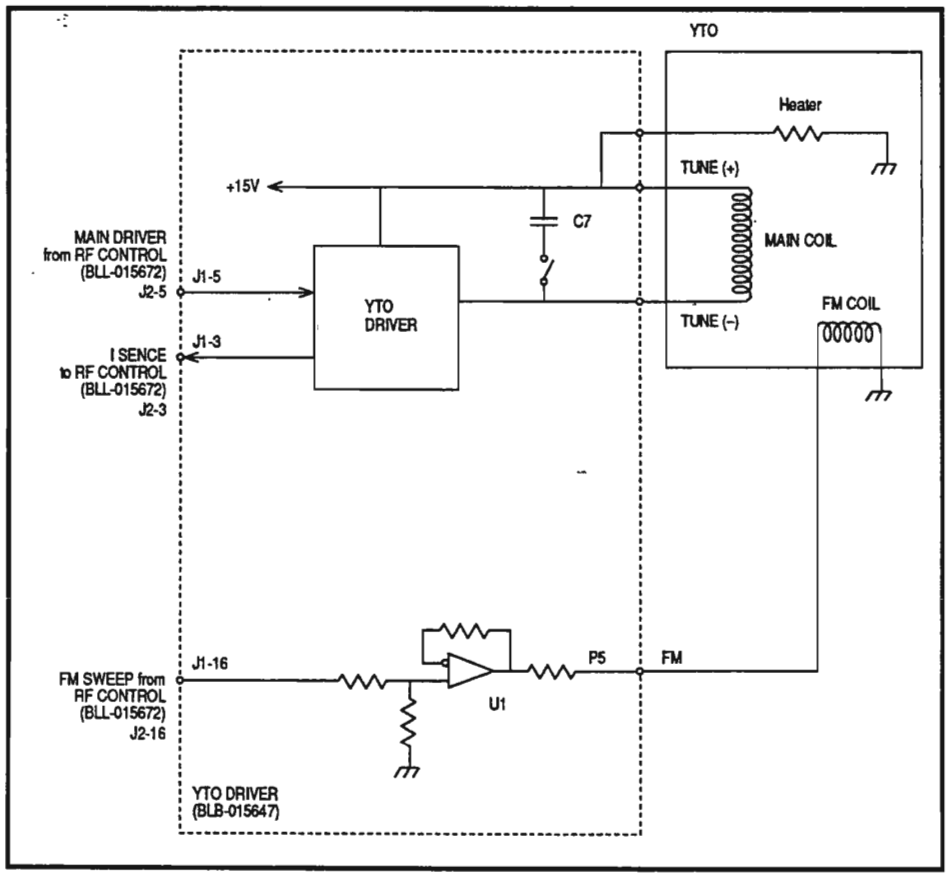

Figure 3–15 YTO Driver

3.3.11 CAL Amplifier

Figure 3–16 shows the CAL amplifier. The 30 MHz signal generated by the fourth local oscillator passes to the INPUT ATT (CAL SIGNAL). The CAL amplifier accurately changes the gain of the saturation amplifier: for example, at a CAL LEVEL of –9.6V to –3.0V the CAL SIGNAL becomes –20.0 dBm to –30.0 dBm.

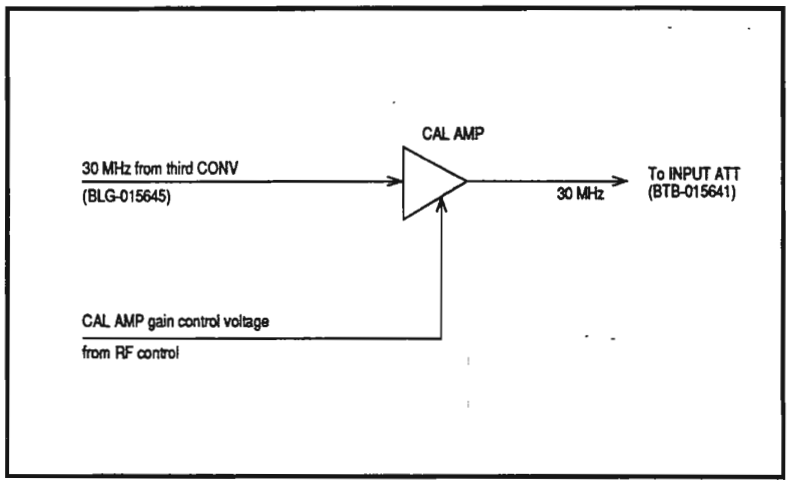

Figure 3–16 CAL Amplifier

Table 3–8 shows the relationship between the CAL LEVEL and the CAL SIGNAL.

Table 3–8 CAL LEVELs and CAL SIGNALs

CAL LEVEL (V)	CAL SIGNAL (dBm)
–9.6	–20.0
–8.9	–20.5
–8.4	–21.0
–8.0	–21.5
:	:
–3.5	–28.5
–3.4	–29.0
–3.2	–29.5
–3.0	–30.0

3.3.12 Tracking Generator (R3361A,C/B,D Only)

Figure 3–17 shows the circuitry for the tracking generator (TG). The TG contains the TG Mixer and an output amplifier to allow direct viewing of frequency attenuations of 115 dB or more.

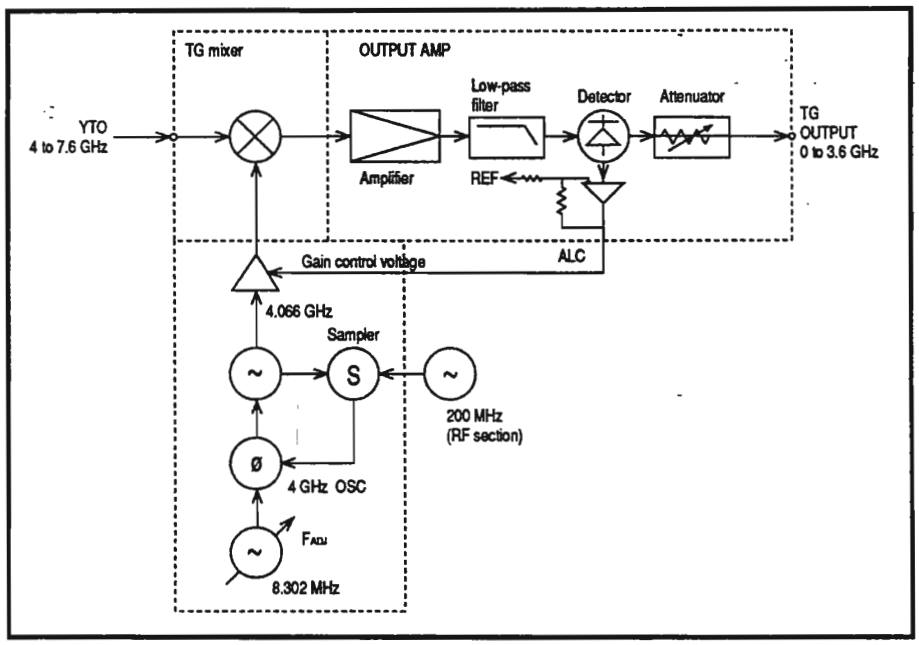

Figure 3–17 Tracking Generator Block Diagram

Unlike conventional tracking generators that generate tracking output signals by inversely mixing each local signal, the R3361A,C/B,D produces the TG output by mixing the second IF (4.066 GHz) and YTO signals.

Output amplifier

The output amplifier shown in Figure 3–18 (on the following page) amplifies the TG mixer signals with a total gain ≥ 30dB and applies the ALC (Automatic Level Control) voltage to the amplifier to provide a consistent output level for all frequencies.

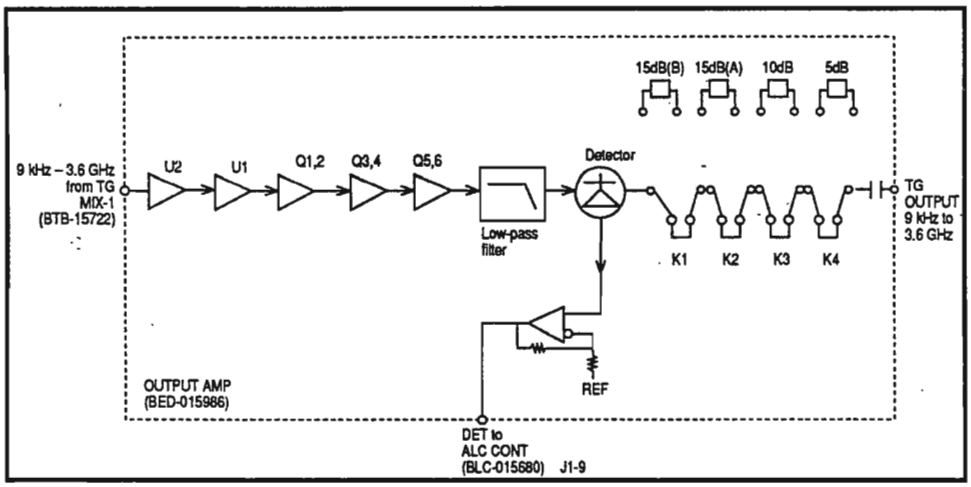

Figure 3–18 Output Amplifier

The TG output level can be adjusted in 5 dB steps by varying the ALC voltage in steps of 1 dB. Table 3–9 shows the relationship between ALC voltage and TG output level.

Table 3–9 Switch Settings for TG Output Levels

Output level (dBm)	5 dB K4	10 dB K3	15 dB (A) K2	15 dB (B) K1
0				
–5	✔			
–10		✔		
–15	✔	✔		
–20	✔			✔
–25		✔		✔
–30	✔	✔		✔
–35	✔		✔	✔
–40		✔	✔	✔
–45	✔	✔	✔	✔
–50	✔	✔	✔	✔
OFF	✔	✔	✔	✔

✔ = Attenuator ON (relay driving voltage = –12V)

Tracking generator mixer

Figure 3–19 shows the TG mixer. This circuitry mixes the output from its 4 GHz oscillator with the signals from the first local oscillator. Note that the mixer follows the sweep frequency while generating its output signals (9 KHz to 3.6 GHz).

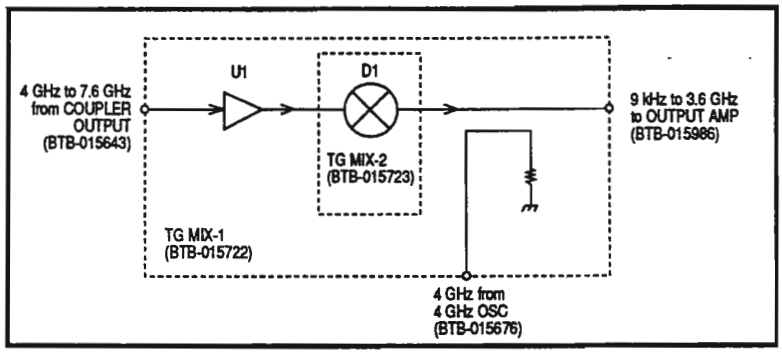

Figure 3–19 TG Mixer

4GHz oscillator

Figure 3–20 (on the following page) shows the 4 GHz oscillator (OSC). Input signals are sampled at 200 MHz (third local oscillator) and phase-locked to the reference oscillator (8.302 MHz VCXO, 7 V).

Tracking errors resulting from errors between the first local oscillator and the TG output can be compensated by adjusting the frequency of the reference oscillator. This adjustment also prevents errors caused by the resomic oscillator, TG P.L.L., or TG SAMPLER U1 power supplies. Adjusting the oscillator's frequency sets the TG attenuator to 45 dB.

Tracking generator control

The tracking generator control (TG CONT) consists of a latching IC (U1) and a D/A converter (U2). The latch IC feeds preset signals for the attenuator, the TG ON/OFF state, and the ALC band to the proper circuitry block. The D/A converter is used to fine tune the oscillation frequency of the reference oscillator. See Figure 3–20.

ALC (Automatic Level Control)

The ALC circuitry combines the SLOPE voltage and the DET voltage, then applies the sum to the ALC modulator. The TG output level and the frequency response can be kept constant by varying the output level of the ALC modulator. See Figure 3–20.

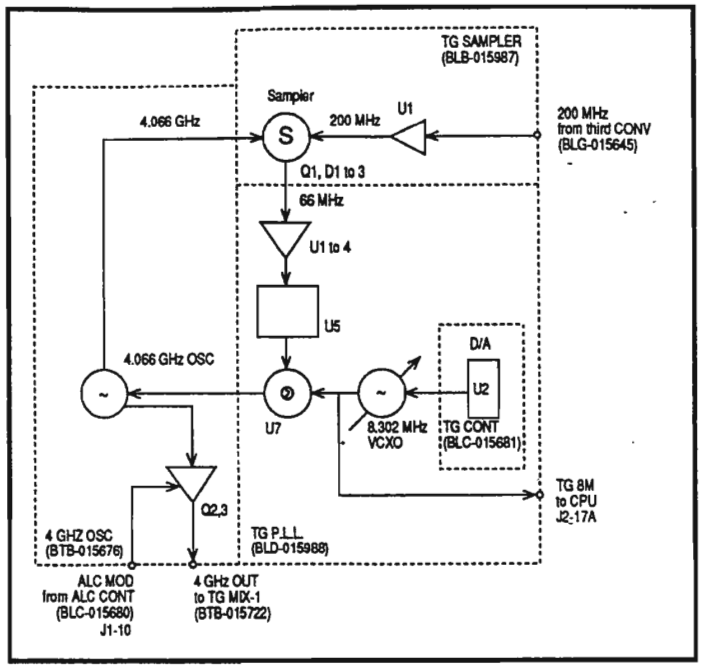

Figure 3–20 4GHz Oscillator

Compensation for tracking error (R3361 only)

The R3361 features three tracking error compensation modes: FREC CAL AUTO mode, FREC CAL MANUAL mode, and TG TRACKING mode. These modes are described below.

FREC CAL AUTO mode

In this mode the R3361 measures the frequencies of the fourth IF (3.58 MHz) and the reference oscillator (8.302 MHz VCXO) for the TG 4 GHz OSC. The tracking error of the RBW setting is calculated from the SYNTHE setting.

The error compensation value is sent to the D/A converter of TG controller U2, then to the reference oscillator. If the RBW is 3 KHz or higher, a compensation value of 1 KHz is used.

FREC CAL MANUAL mode

When in this mode the R3361 uses a compensation value from 000_H to FFF_H. This value can be manually set in the error compensation D/A converter.

TG TRACKING mode

In this mode the tracking error compensation is made in four RBW bands: 1 KHz, 300 Hz, 100 Hz and 30 Hz. If the RBW is 3 KHz or higher, a compensation value of 1 KHz is used.

3.3.13 Central Processing Unit and Peripherals

Figure 3–21 shows the R3261/R3361 mother board.

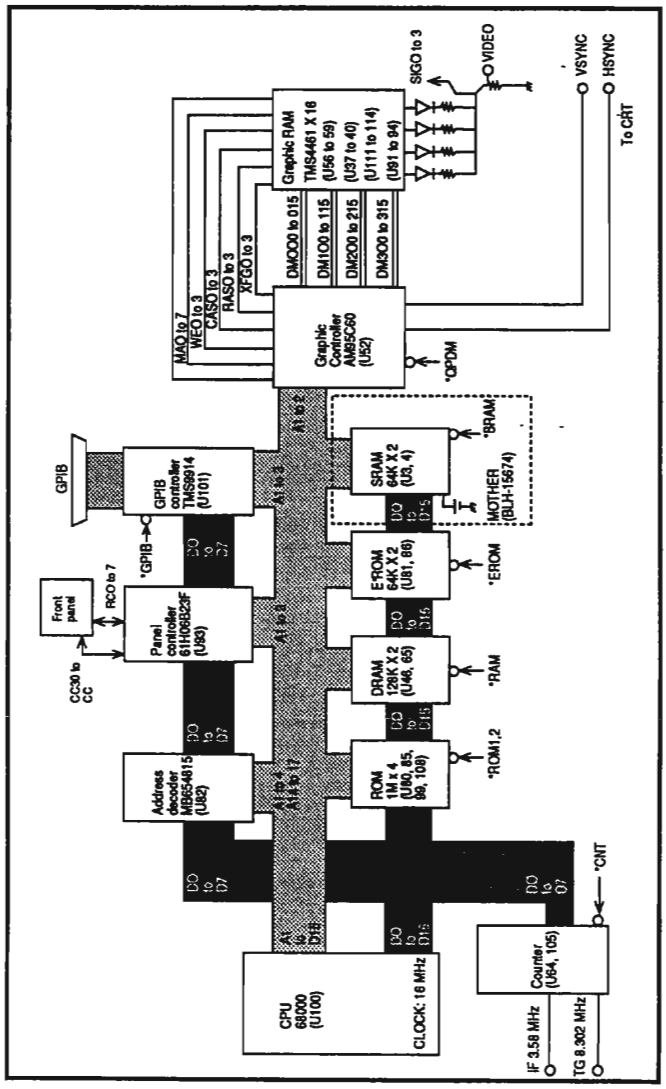

Figure 3–21 R3261/3361 Mother Board

The R3261/3361 mother board contains a Motorola 68000 16-bit CPU and several peripheral chips:

- E^2ROM (U81, 86) contains the frequency characteristic compensation data for the RF circuitry.
- SRAM (MOTHER U3, 4) contains the CAL data and the SAVE/RECALL setting.
- Gate Array (U82) (made by ADVANTEST) is an address decoder.
- Panel Controller (U93) is a controller for the keypad.
- GPIB controller (U101) is the interface controller.
- Graphic Controller (U52) is the CRT display controller.

Memory map

Table 3–10 shows the CPU memory map of the R3261/3361. The table shows how the CPU memory is allocated, and the READ/WRITE abilities of particular memory devices.

Table 3–10 Memory Map

Signal	Address	READ	WRITE	Remarks
ROM	000000 – 0FFFFF	✔		Program ROM
RAM	100000 – 13FFFF	✔	✔	RAM
GRAM	140000 – 17FFFF	✔	✔	RAM in optional controller board
BRAM	180000 – 183FFF	✔	✔	SAVE/RECALL RAM (on mother board)
RAMP	184000	✔	✔	Ramp generator (IF BLQ–015668 U503)
A/D	188000	✔	✔	A/D converter
I/O	18C000	✔	✔	Optional controller board
MCARD	190000	✔	✔	Memory card
HSAD	194000		✔	Optional high speed A/D converter
ARAM	198000 – 19FFFF	✔	✔	Memory in high speed A/D converter
EROM	1A0000 – 1A3FFF	✔	✔	E^2ROM (frequency characteristics compensation data)
KEY	1A4000	✔	✔	Panel controller (61H06B23F)
QPDM	1A8000	✔	✔	Graphic controller (Am95C60)
GPIB	1AC000	✔	✔	GPIB controller (TMS9914)
CNT	1B0000	✔	✔	Counter
PDINT	1B4000	✔		Interrupt (level 3) detail check
SELCI	1B8000		✔	Selection of counter input signal (IF, TG)

(Cont'd)

Signal	Address	READ	WRITE	Remarks
CSTART	1B8100		✔	Counter start
CICLR	1B8200		✔	Counter interrupt clear
GRST	1B8300		✔	Graphic controller reset
CLRSTD	1B8400		✔	STD interrupt clear
MICLR	1B8500		✔	Marker interrupt clear
CLRSTP	1B8600		✔	Sweep stop clear
DISP	1B8700		✔	Display control
CSRF	1C0000		✔	RF block
CSLOG	1D0000		✔	LOG part
CSIF	1E0000		✔	IF part

Debug Mode

The R3261/3361 has a built-in debug mode that allows data to be read from or written to any memory address. Debug mode offers six functions that can be selected by pushing the soft keys. These functions are as follows:

- **READ/WRITE** – reads a specified memory address immediately after writing to it. This function is used as a WRITE/READ test for the RAM.
- **READ ONLY** – continuously reads a specified memory location. READ ONLY is used to monitor the CAL correction and A/D converter data. The R3261/3361 continues to display waveform data while executing READ ONLY.
- **WRITE ONLY** – continuously writes data to a specified address location. WRITE ONLY is used to configure the operation of the analyzer.
- **READ LOOP** – limits memory reads to a specified address (the address can be determined by using the READ ONLY function). Since the R3261/3361 does not display waveforms in a READ LOOP, this function is used mainly for monitoring logic signals.
- **WRITE LOOP** – limits memory writes to a specified address.
- **RETURN** – exits debug mode.

To access debug mode, turn ON the spectrum analyzer, then press [SHIFT] and [BK SP] on the keyboard. Figure 3–22 shows the display that appears.

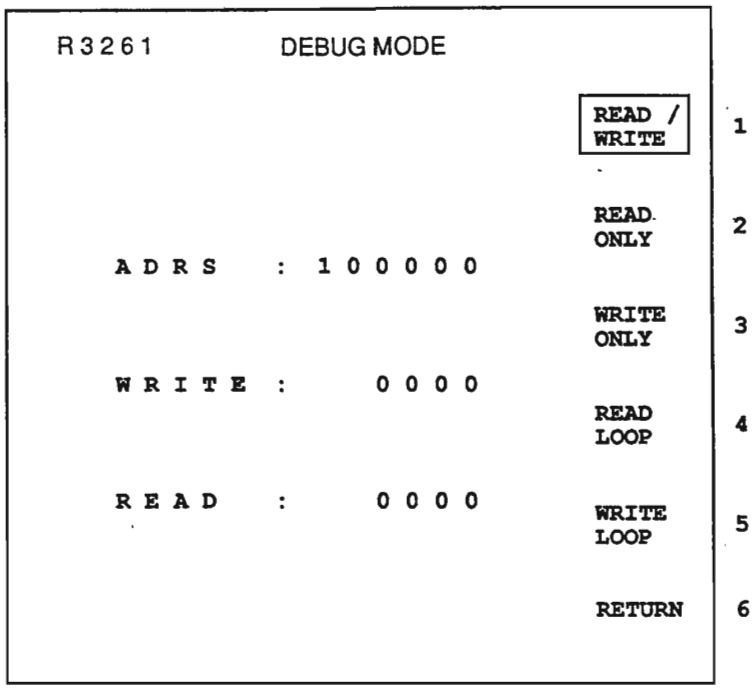

Figure 3–22 Debug Mode Display

Note that memory addresses are displayed and entered in hexadecimal format. To provide all 16 hexadecimal digits the R3261/3361 uses several of its special function keys. Table 3–11 shows the hexadecimal value of each key. To enter a hexadecimal number, type the number using the keys in Table 3–11 and press the [ENTER] key.

Table 3–11 Hexadecimal Values of R3261/3361 Keys

Hex value	Key	Hex value	Key	Hex Value	Key
0	[0]	6	[6]	C	[START]
1	[1]	7	[7]	D	[STOP]
2	[2]	8	[8]	E	[REF LEVEL]
3	[3]	9	[9]	F	[COUPLE]
4	[4]	A	[CENTER FREQ]		
5	[5]	B	[FREQ SPAN]		

3.3.14 Counter Operation

The R3261/3361's built-in frequency counter has a tuned amplifier (TUNED AMP) mode similar to that of conventional spectrum analyzers. The input frequency for the counter is obtained by calculating M, N, and f_{FRAC} after measuring the final IF.

If the SPAN frequency is 2 MHz or higher, the counter sets and locks the ZERO SPAN at the marker position on the CRT, and searches for M, N, and f_{FRAC} at the marker position. The counter then measures the final IF and calculates the input frequency. If the SPAN frequency is less than 2 MHz, the R3261/3361 operates in the same manner except that M and N must be set values (determined by the CPU).

3.3.15 Power Source

Figure 3–23 shows the power source circuitry. The power source supplies ±15V, ±12V, and ±5V to the appropriate block and board on the mother board. A regulator IC and transistors on the mother board provide 8V and 10V levels. The power source also supplies signals for the LINE trigger (frequency = source frequency with a TTL level).

Note that the AC power source voltage can be set to 100V or 220V by a switch on the rear panel of the unit.

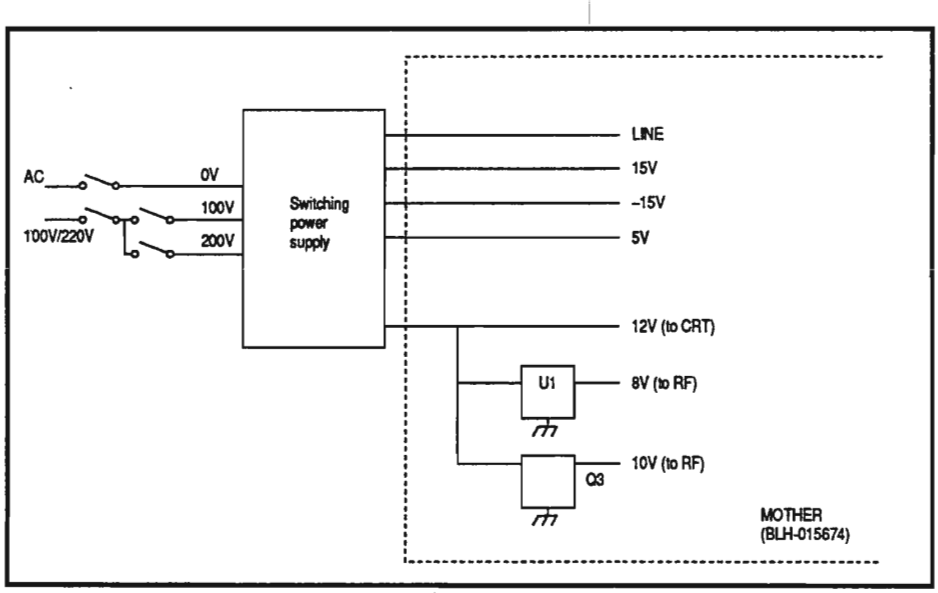

Figure 3–23 Power Source

3.4 Location

3.4.1 Block/Board Layout

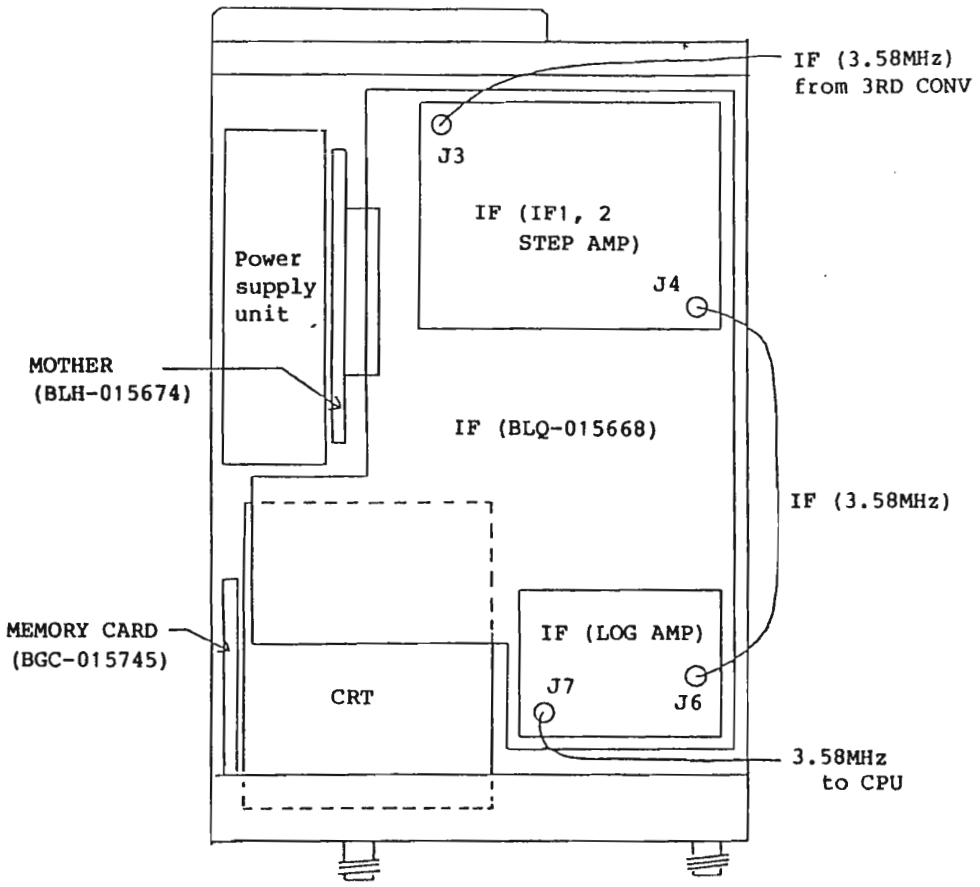

Top view

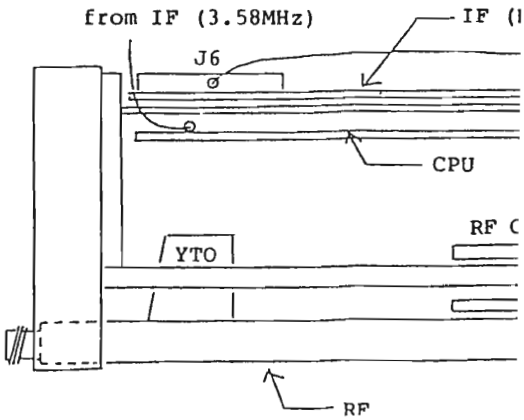

Side view

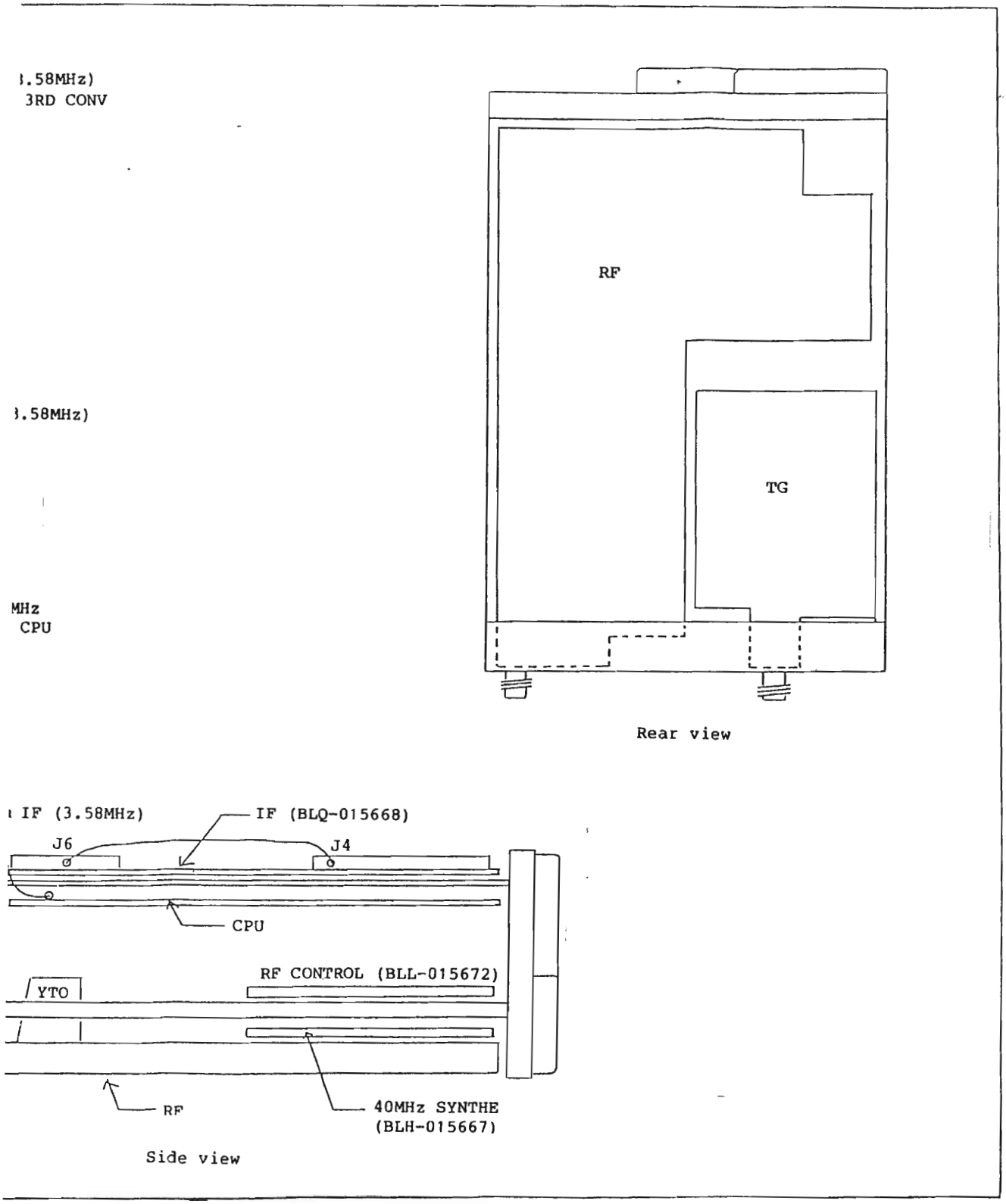

Figure 3-24 **Block/Board Layout**

3.4.2 RF Block Internal View

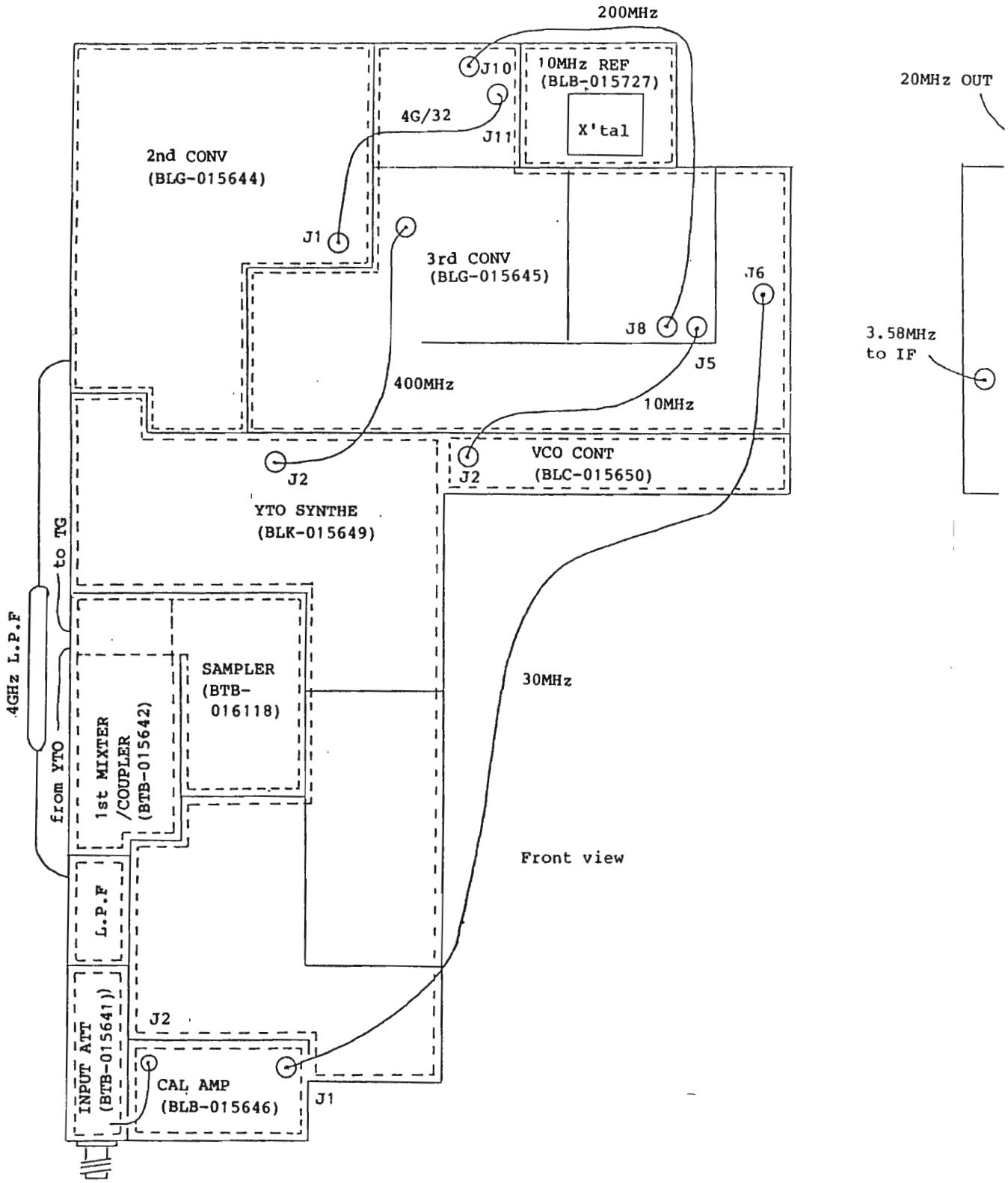

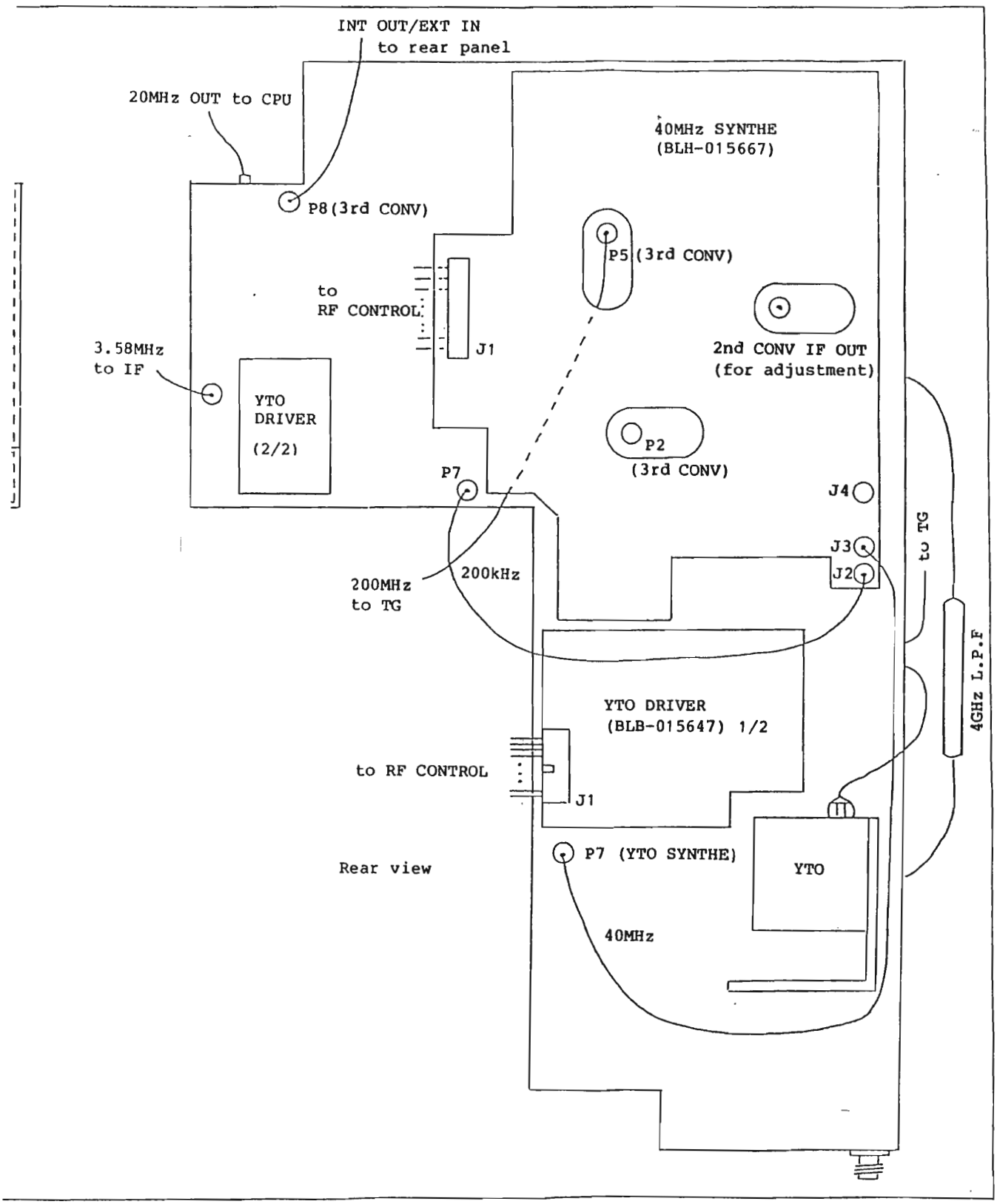

Figure 3-25 **RF Block Internal View**

3.4.3 TG Block Internal View

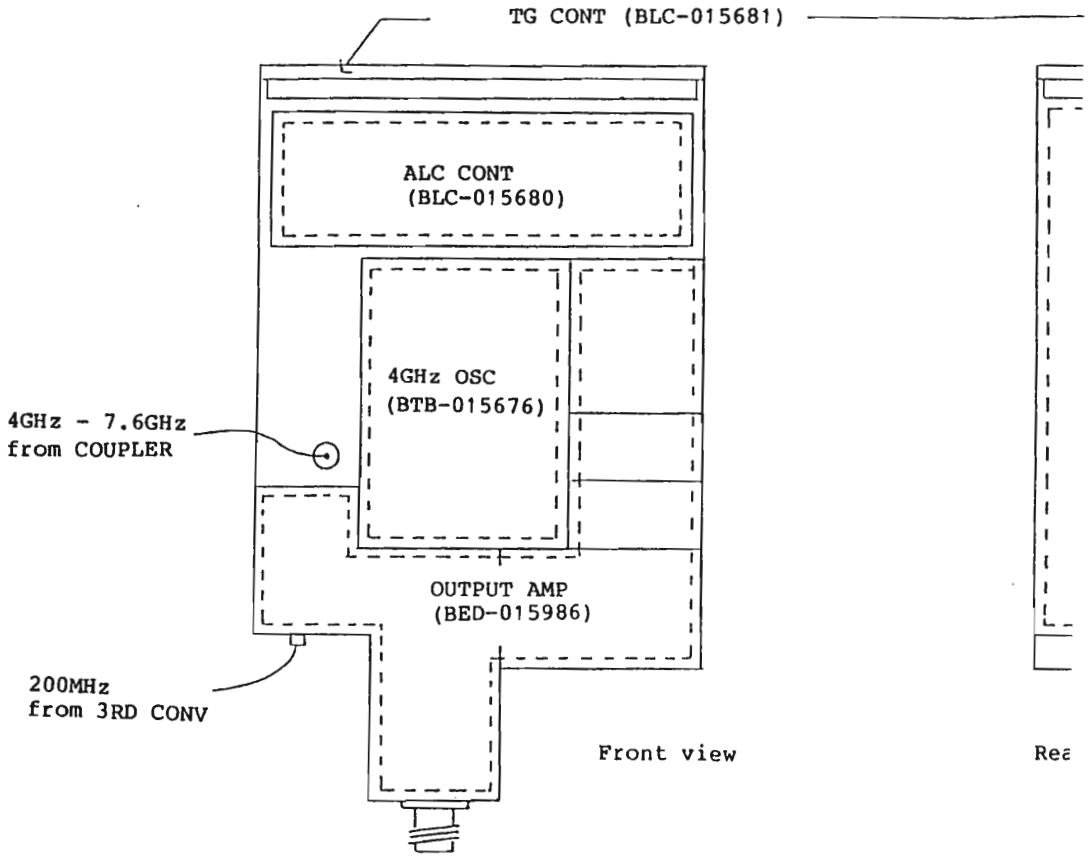

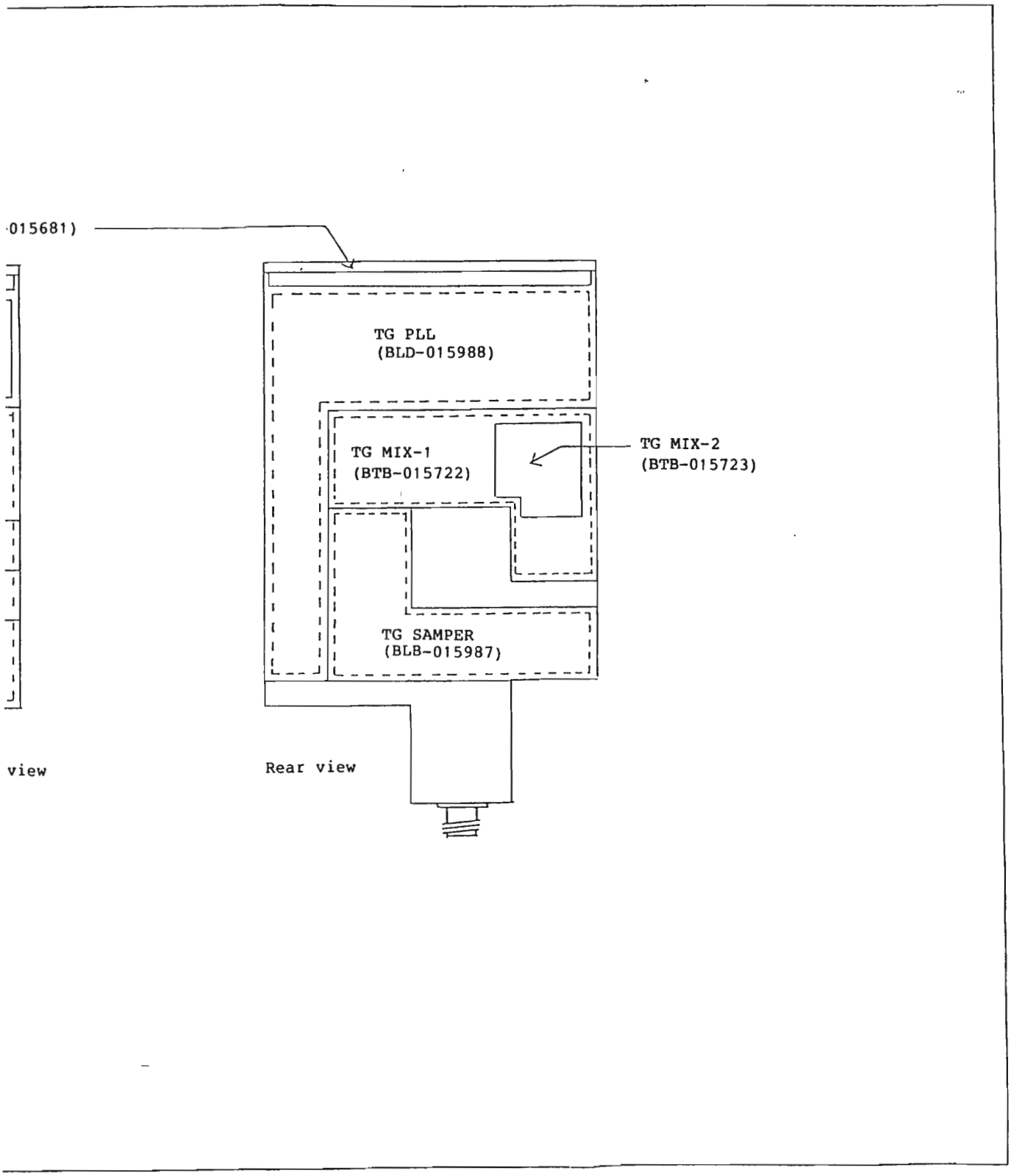

Figure 3-26 TG Block Internal View

4. PERFORMANCE TEST

4.1 General

4.1.1 Testing Equipment

Equipment to be used for the performance test is listed in Table 4-1. The cables needed are listed in Table 4-2.

Table 4-1 Test Equipment

Test Equipment	Required Performance		Recommended Equipment
Synthesized Signal Generator	Frequency Output Level Output Impedance AM Modulation	: to 3.6 GHz : +10 dBm to -30 dBm : 50Ω : 100 Hz with 30% Modulation (or external modulation)	Advantest R4262
Low Distortion Signal Generation (or synthesized signal generator with low pass filter)	Frequency Output Level Output Impedance Second Harmonic Frequency	: to 1.8 GHz : -10 dBm : 50Ω : 60dB or less for -10dBm output	Advantest R4262 +L.P.F.
RF Power Meter	Frequency Sensitivity	: to 3.6 GHz : +20 dBm to -50 dBm : ±0.2 dB	Generic
Attenuator	Frequency Attenuation Stability	: to 500 MHz : 10 dB step : 0 to 110 dB : 1 dB step : 0 to 11 dB : 10dB : ±0.2 dB : 1dB : ±0.02 dB	Generic
Low-Frequency Generator	Frequency Output Level	: 100 Hz : 1 Vp-p	Generic
Frequency Comparator			Generic
Frequency Standard	Stability	: 2×10^{-9}	Advantest TR3110

Table 4-2 Cables & Adapters Required

Product Name	Model	Stock No.	Remarks
Connecting Cable (BNC-BNC)	MI-02	DCB-FF0386	
Connecting Cable (SMA-SMA)	A01002	-	
N-BNC Conversion Adapter	JUG-201A/U	JCF-AF001Ex03	
N-SMA Conversion Adapter			

4.1.2 Calibration

Self-calibration is an important factor for the high performance spectrum analyzer.
Let the system warm up for 30 minutes and then start the self-calibration performance test.
Self- calibration is started by the following keystrokes.

[SHIFT] [7] [CAL ALL]
(SOFT KEY 1)

The calibration should be made on the following items :

(1) INPUT ATTENUATOR
(2) IF STEP AMP
(3) RBW SWITCHING
(4) LOG LINEARITY
(5) AMPLITUDE MAG
(6) TG TRACKING

4.2 Testing CAL Signals

The CAL signal frequency accuracy is same as that of the reference oscillator because the CAL signal is phase-locked to the reference oscillator.

$\pm 2 \times 10^{-8}$/day
$\pm 1 \times 10^{-7}$/year

Procedure

① Preset and then set spectrum analyzer to the following settings.

CENTER FREQ	:	30MHz
FREQ SPAN	:	2MHz
RBW	:	300kHz
dB/div	:	1dB
REF LEVEL	:	-15dBm

② Enter a 30MHz, -20.0dBm signal from an external signal generator to the system.

③ Adjust the REF LEVEL so that the spectrum of the signal appears at the center of the screen.

④ Remove the cable that is connected to the external signal generator. Make the CAL SIG (at -20.0dBm) appear on the screen.

SHIFT | 7 | CAL SIG ON/OFF
(SOFT KEY 4)

⑤ Check that the difference is within ±0.3dB between the levels of the signal at the input from SG and the CAL SIG. If not, make adjustments according to the chapter 5. "ADJUSTMENTS" in maintenance manual.

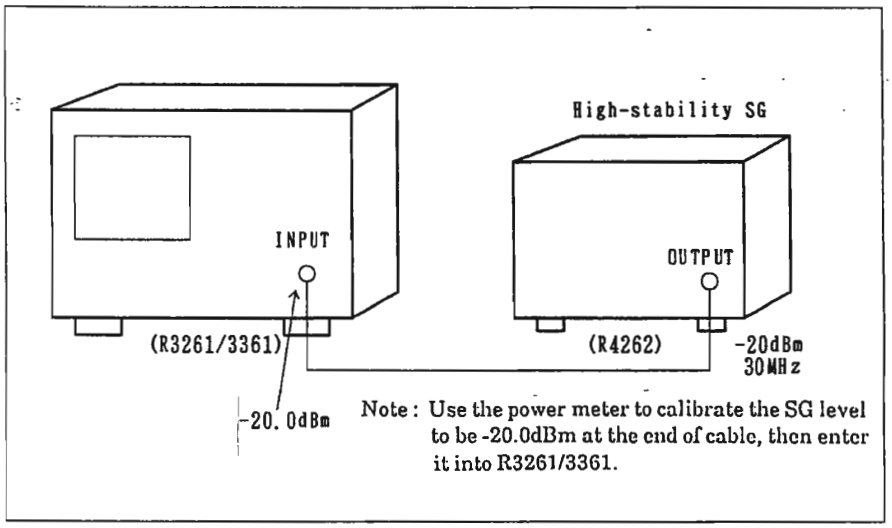

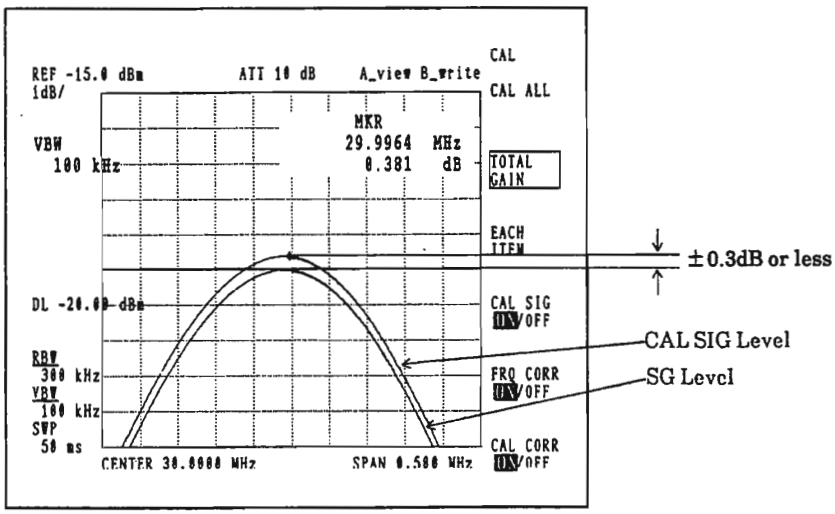

4.3 Test Using Internal Signal

4.3.1 Testing Noise Sideband

Procedure

① From the preset condition, set the spectrum analyzer as follows:

CENTER FREQ	:	0MHz
FREQ SPAN	:	40kHz
ATT	:	0dB
VBW	:	10Hz
RBW	:	300Hz

② Read the peak level of the zero spectrum using the marker.

③ Set the spectrum analyzer as follows:

REF LEVEL : -50dBm

④ Read the average left end level of the noise waveform as it appears on the screen.

⑤ Obtain the noise sideband (with 20kHz offset) from the levels determined in steps ② and ④ above.

The formula used is:

result of ② put into XdB
result of ④ put into YdB
$|Y| - |X| - 23dBc/Hz \leqq -105dBc/Hz$

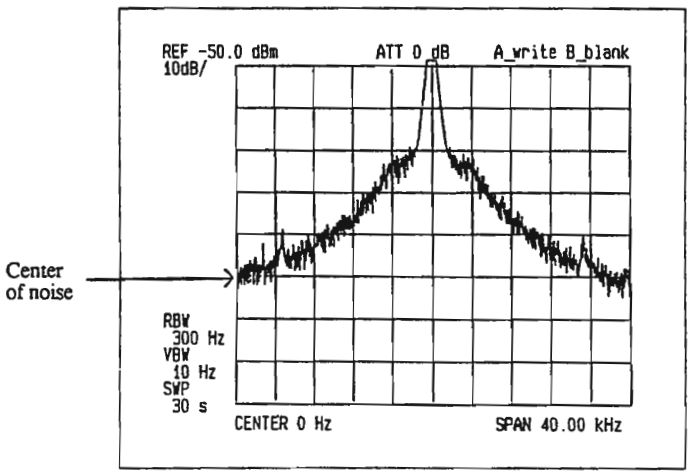

4.3.2 Testing Frequency Drift

Procedure

① **Preset and then set the spectrum analyzer to the following settings :**

CENTER FREQ	:	0MHz
FREQ SPAN	:	1kHz

② Confirm that the drift of the zero spectrum as measured for one minute is within 300Hz.

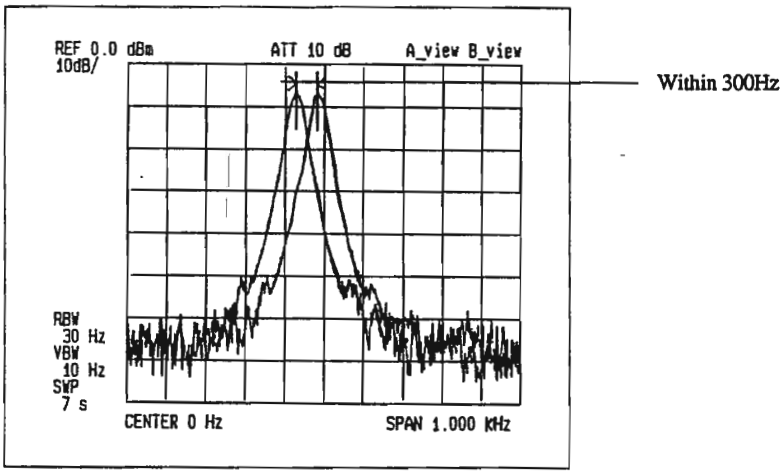

4.3.3 Testing Resolution Bandwidth (3dB bandwidth)

Procedure

① Preset and then set the spectrum analyzer to the following settings:

CENTER FREQ	:	30MHz
FREQ SPAN	:	2MHz
RBW	:	1MHz
REF LEVEL	:	-18dBm
dB/div	:	1dB
CAL SIG	:	ON

② Set the spectrum analyzer as follows:

PEAK
ΔMKR

③ By turning the data knob counterclockwise, move the marker to such a position as to give a 3dB difference between the two points indicated by the marker.

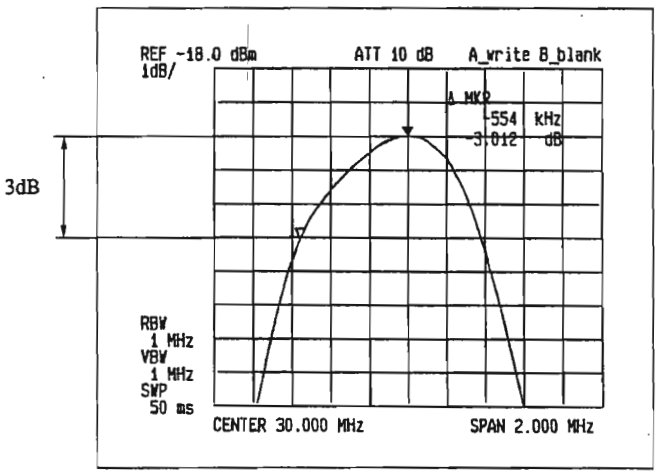

④ Set the spectrum analyzer as follows:

ΔMKR

⑤ By turning the data knob counterclockwise, move the marker to such a position as to give a 0.0dB difference between the two points indicated by the marker.

Cont'd

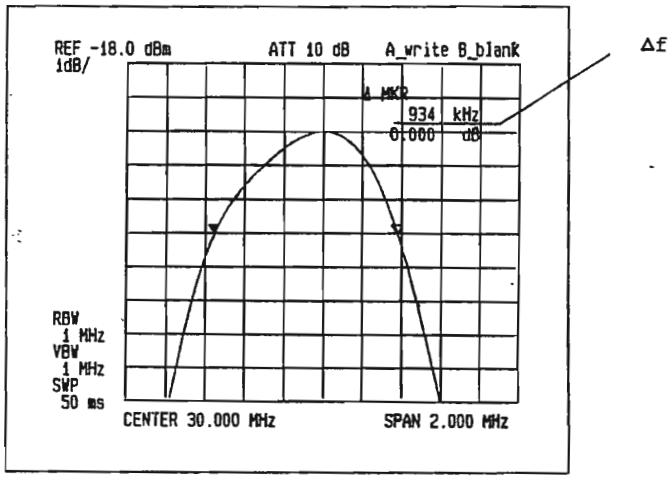

⑥ Confirm that the frequency difference, Δf, is within ±20% of the set value.

⑦ Check for 300kHz and 3kHz resolution bandwidths by performing steps ② through ⑥ above. Table 4-3 lists the span values most suitable to each resolution bandwidth. If the test result falls out of the specification, make adjustments in accordance with "5.4.3 Resolution Band Width Switching Between".

Table 4-3 Relationship Between Resolution Bandwidth and Span

RBW [Hz]	1M	300k	3k
FREQ SPAN [Hz]	2M	500k	5k

4.3.4 Testing Selectivity of Resolution Bandwidth

Procedure

① From the preset condition, set the spectrum analyzer as follows:

CENTER FREQ	:	30MHz
FREQ SPAN	:	5MHz
RBW	:	1MHz
VBW	:	10kHz
ATT	:	0dB
REF LEVEL	:	-20dBm
CAL SIG	:	ON

② Set the spectrum analyzer as follows:

PEAK
ΔMKR

③ By turning the data knob counterclockwise, move the marker to such a position as to give a 60dB difference between the two points indicated by the marker.

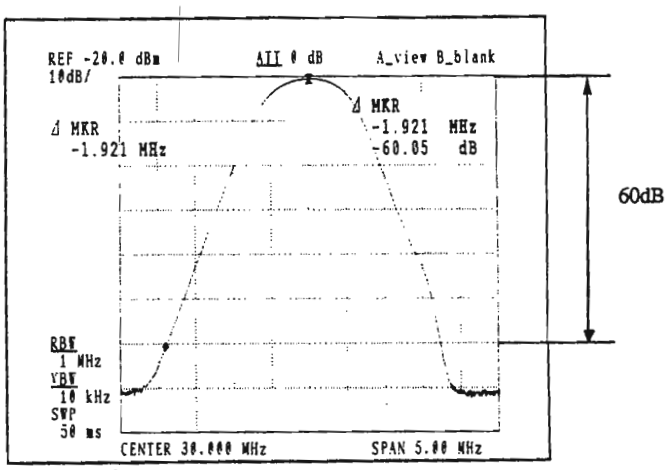

④ Set the spectrum analyzer as follows:

ΔMKR

Cont'd

⑤ By turning the data knob counterclockwise, move the marker to such a position as to give a 0.0dB difference between the two points indicated by the marker.

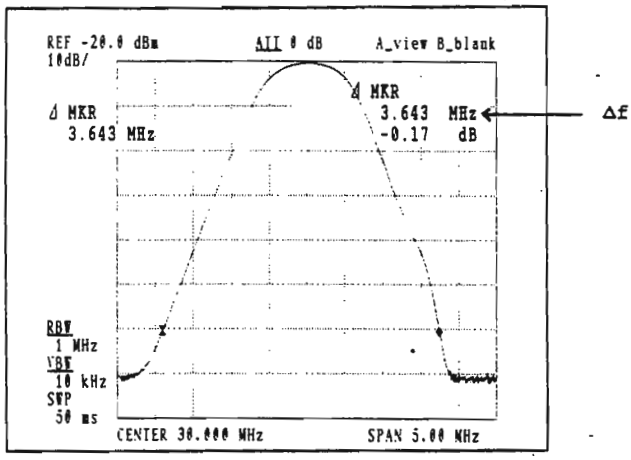

⑥ The 60dB bandwidth of the IF filter is given as the frequency difference, Δf, between the two points. Confirm that the ratio of this value to the value obtained in the resolution bandwidth test is 15:1 or less.

⑦ Check for 300kHz and 3kHz resolution bandwidths by performing steps ② through ⑥ above. Table 4-4 shows the relationship between resolution bandwidth and FREQ SPAN. If the test result falls out of the specification, make adjustments according to "5.4.3 Resolution Band Width Switching Between".

Table 4-4 Settings for Resolution Bandwidth Selectivity Test

RBW [Hz]	1M	300k	3k
FREQ SPAN [Hz]	5M	5M	50k
VBW [Hz]	10k	10k	1k

4.3.5 Testing Stability of QP Bandwidth

The QP value measurement is for measuring the pulse characteristic noise. Various constants in this measurement are defined values in the CISPR Standards as shown in Table 4-5.

Table 4-5 CISPR Standards for QP Value Measurement Basic Characteristic

Measuring band	6dB bandwidth	Charging time constant	Discharging time constant	Mechanical time constant
10kHz to 150kHz	200Hz	45ms	500ms	160ms
150kHz to 30MHz	9kHz	1ms	160ms	160ms
30MHz to 1GHz	120kHz	1ms	550ms	100ms

Procedure

① From the preset condition, set the spectrum analyzer as follows:

CENTER FREQ : 30MHz
FREQ SPAN : 200kHz
REF LEVEL : -18dBm
dB/div : 2dB/
QP BW : 120kHz (6dB)
CAL SIG : ON

② Set the spectrum analyzer as follows:

PEAK
ΔMKR

③ By turning the data knob counterclockwise, move the marker to such a position as to give a 6dB difference between the two points indicated by the marker.

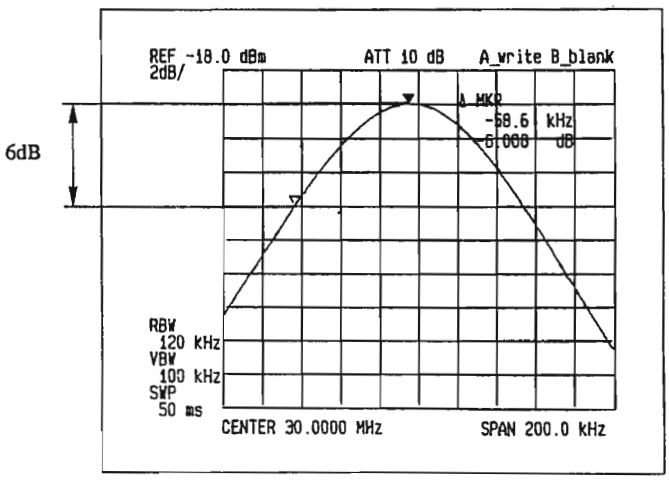

Cont'd

④ Set the spectrum analyzer as follows:

ΔMKR

⑤ By turning the data knob counterclockwise, move the marker to such a position as to give a 0.0dB difference between the two points indicated by the marker.

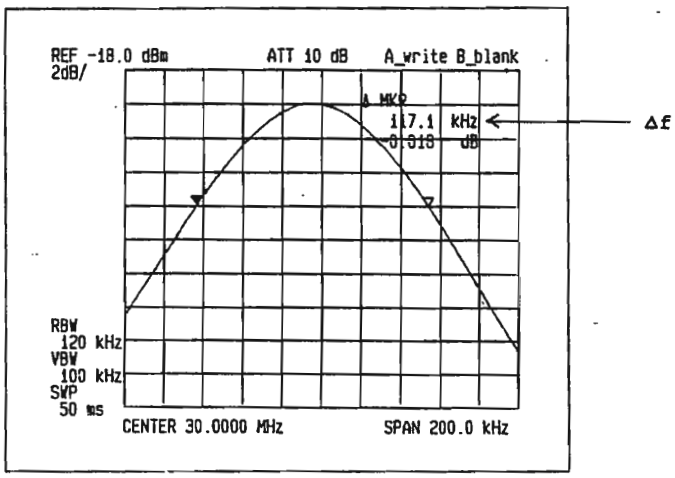

⑥ **Confirm that the frequency difference, Δf, between the points is within 110kHz to 130kHz.**

⑦ Check for 9kHz and 200Hz QP bandwidths by performing steps ② to ⑥ above. Table 4-6 shows the relationships between QP bandwidth, FREQ SPAN and sweep time.

Table 4-6 Setting for the QP Bandwidth Stability Test

QP bandwidth	120kHz	9kHz	200Hz
FREQ SPAN	200kHz	20kHz	2kHz
Sweep time	50ms	100ms	2sec

4.3.6 Testing Stability of Marker Indication (In normal mode)

Procedure

① From the preset condition, set the spectrum analyzer as follows:

CENTER FREQ	:	30MHz
FREQ SPAN	:	20MHz
CAL SIG	:	ON
MARKER	:	PEAK

② Confirm that the marker indication is within 30MHz ±1.05MHz.

③ Set the spectrum analyzer as follows:

FREQ SPAN	:	10MHz
MARKER	:	PEAK

④ Confirm that the marker indication is within 30MHz ±0.55MHz

⑤ Set the spectrum analyzer as follows:

FREQ SPAN	:	2MHz
MARKER	:	PEAK

⑥ Confirm that the marker indicator is within 30MHz ±0. 16MHz.

4.3.7 Testing Stability of Marker Indication (In counter mode)

Procedure

① From the preset condition, set the spectrum analyzer as follows:

CENTER FREQ	:	30MHz
FREQ SPAN	:	1kHz
CAL SIG	:	ON
MARKER	:	PEAK COUNTER
RESOLUTION	:	1Hz

② Confirm that the marker indication is within 30MHz ± 1Hz.

4.3.8 Testing Average Noise Level

Procedure

① From the preset condition, set the spectrum analyzer as follows:

ATT	:	0dB
REFLEVEL	:	-70dBm
RBW	:	1MHz
VBW	:	1kHz
START FREQ	:	50MHz
STOP FREQ	:	3600MHz **(2600MHz for R3261A,C/R3361A,C)**

② At completion of the sweep, set the spectrum analyzer as follows:

Press the PEAK , MKR→ and MKR→ CF keys.

SPAN	:	1kHz
RBW	:	300Hz
VBW	:	1kHz

③ Confirm that the noise level at the frequency, in GHz, determined in step ② above is -121dBm+1.55f[GHz] or less.

4.3.9 Testing Residual Response

Procedure

① From the preset condition, set the spectrum analyzer as follows:

CENTER FREQ	:	250MHz
SPAN	:	500MHz
RBW	:	30kHz
VBW	:	1kHz
ATT	:	0dB
REF LEVEL	:	-60dBm

② Confirm that there is no residual spurious when no connection is made to the input terminal of the spectrum analyzer.

③ Confirm that there is no residual spurious when the frequency is changed up to 3.6GHz (2.6GHz for R3261A,C/R3361A,C) with the CENTER FREQ set to 500MHz.

4.3.10 Testing Switchover Stability of Resolution Bandwidth

Procedure

① From the preset condition, set the spectrum analyzer as follows:

CENTER FREQ	:	30MHz
FREQ SPAN	:	500kHz
RBW	:	300kHz
REF LEVEL	:	-15dBm
dB/div	:	1dB/
CAL SIG	:	ON

② While changing the resolution bandwidth from 1MHz to 30Hz, confirm that the peak level of each spectrum is within ±0.3dB of the level at 300kHz resolution bandwidth. Table 4-7 shows that relationship between bandwidth and FREQ SPAN. If the test result falls out of the specification, make adjustments according to "5.4.3 Resolution Band Width Switching Between".

Table 4-7 Relationship Between Resolution Bandwidth and FREQ SPAN

RBW [Hz]	1M	300k	100k	30k	10k	3k	1k	300	100	30
FREQ SPAN [Hz]	2M	500k	200k	50k	20k	5k	2k	1k	1k	1k

4.4 Testing Using Measuring Equipment

4.4.1 Testing Stability of Reference Oscillator

Procedure

① Set the REF INT OUT/EXT IN switch on the rear panel of the spectrum analyzer to INT OUT. Connect frequency standard to REF socket on spectrum analyzer through a frequency comparator.

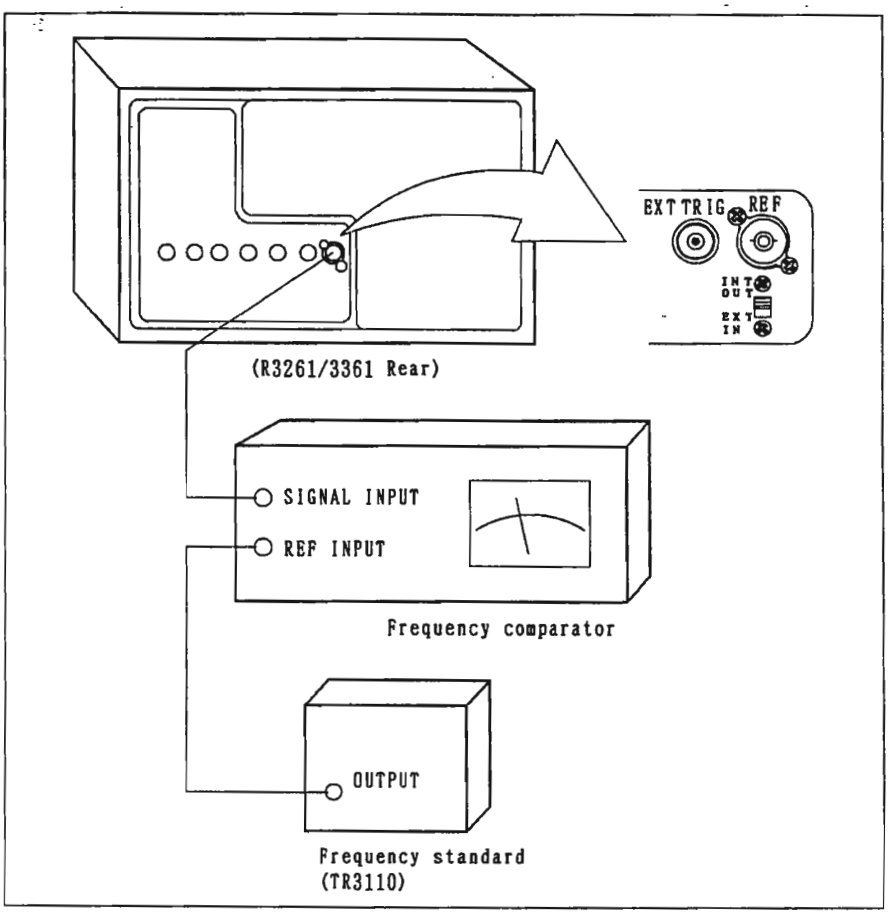

② Confirm that the reading on the frequency comparator is 2×10^{-8} or less.

Cont'd

4.4.2 Testing Stability of Center Frequency

Procedure

① From the preset condition, set the spectrum analyzer as follows:

CENTER FREQ : 30MHz
FREQ SPAN : 20MHz

② Input a 30MHz, -10dBm signal-generated signal to the spectrum analyzer. The signal generator must have stability of 2×10^{-8} or better.

③ Confirm that the peak of the spectrum is within ±450kHz (±0.2 div). of the screen center.

④ Set the spectrum analyzer to the following settings, and confirm that the position of the spectrum peak is still within the specification.

Table 4-8 FREQ SPAN and Center Frequency Stability

FREQ SPAN	20MHz	10MHz	2MHz	1 kHz
Specification	±450kHz (±0.2div)	±250kHz (±0.2div)	±60kHz (±0.3div)	±50Hz (±0.5div)

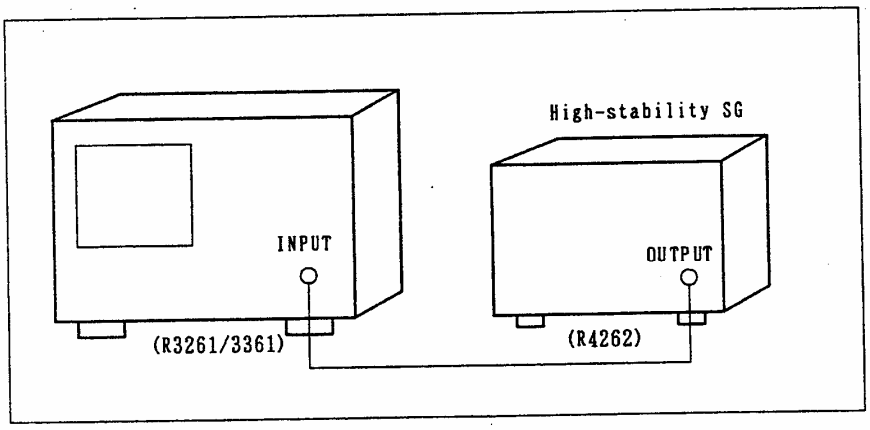

Cont'd

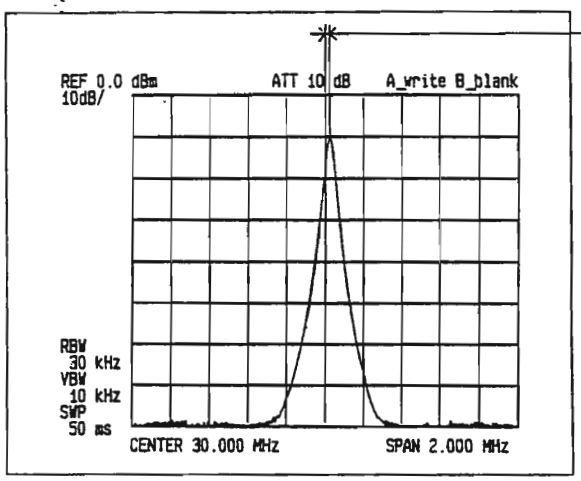

Confirm that the position of the spectrum peak is within the specification

4.4.3 Testing Stability of Frequency Span

Procedure

① From the preset condition, set the spectrum analyzer as follows:

CENTER FREQ	:	1GHz
FREQ SPAN	:	2GHz

② Input to the spectrum analyzer a 2GHz, -10dBm signal from an external signal generator.

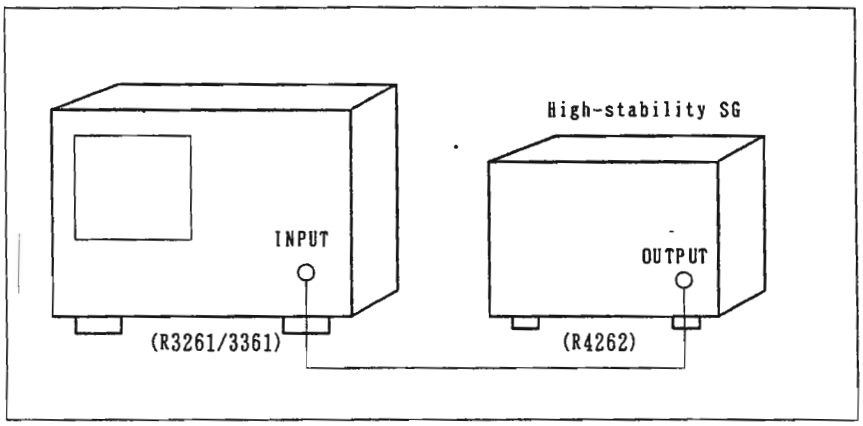

③ Adjust the CENTER FREQ so that the zero spectrum is at the left end of the scale.

④ Confirm that the difference between the 2GHz spectrum and the right scale end is within ±0.3 div. (within ±3%). If not, make adjustments according to "5.4. 1 (1) Main Span (2GHz)".

Cont'd

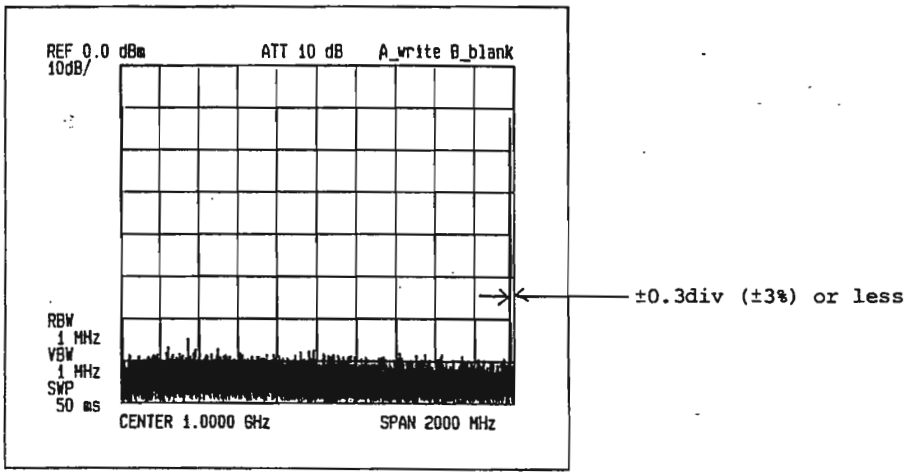

⑤ Set the spectrum analyzer as follows:

CENTER FREQ : 5MHz
FREQ SPAN : 10MHz

⑥ Adjust the CENTER FREQ so that the peak of the zero spectrum is at the left end of the scale.

⑦ Input a 10MHz, -10dBm signal from an external signal generator to the spectrum analyzer. Confirm that the difference between the 10MHz spectrum and the right end of the scale is within ±0.3 div. (±3%). If not, make adjustments according to "5.4.1 (2) 10MHz SPN".

⑧ Set the spectrum analyzer to the following settings:

CENTER FREQ : 1MHz
FREQ SPAN : 2MHz

Then input a 2MHz, -10dBm signal from an external signal generator to the spectrum analyzer. Confirm that the difference between the 2MHz spectrum and the right end of the scale is within ±0.5 div. (±5%). If not, make adjustments according to "5.4.1 (3) 2MHz SPAN".

4.4.4 Testing LOG Linearity

Procedure

① From the preset condition, set the spectrum analyzer as follows:

CENTER FREQ	:	30MHz
SPAN	:	2MHz
RBW	:	300kHz
REF LEVEL	:	-10dBm
dB/div	:	1dB/div

② Connect a signal generator to the spectrum analyzer through an external attenuator.

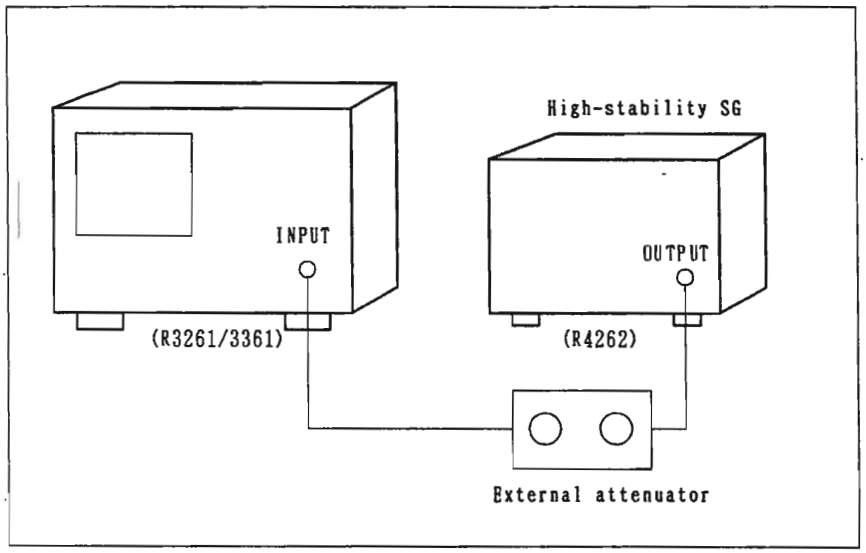

③ Input a 30MHz, - 10dBm signal from the signal generator to the spectrum analyzer.

④ Adjust the output level of the signal generator so that the spectrum peaks at -10dBm when the attenuator is set to 0dB.

⑤ Confirm that the deviation in peak level as read on the screen is within ±0.2dB (±0.2div) while the attenuator setting is incremented by 1dB.

Cont'd

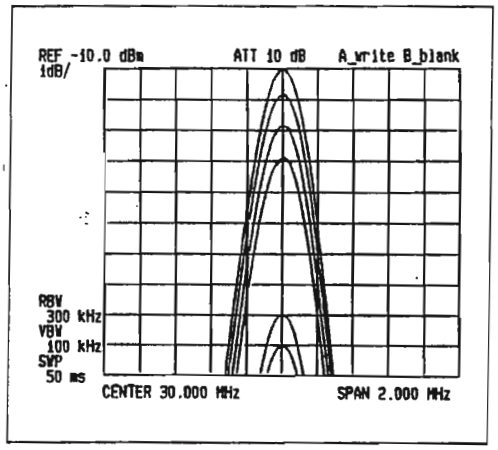

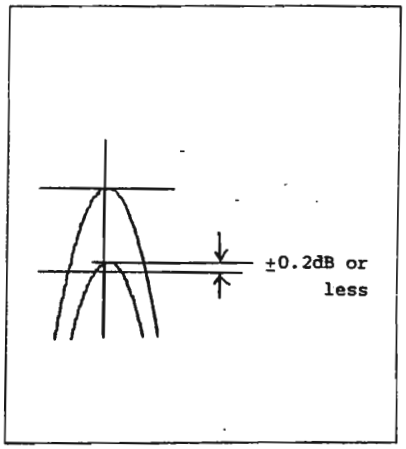

⑥ Set the spectrum analyzer to the following settings:

dB/div	:	10dB/
SPAN	:	50kHz
RBW	:	1kHz

⑦ Adjust the output level of the signal generator so that the spectrum peaks at -10dBm when the attenuator is set to 0dB.

⑧ Confirm that the deviation in peak level as read on the screen is within ±1dB (±0. 1 div) while the attenuator setting is incremented by 10dB.

⑨ Confirm that the spectrum peaks at -80dBm ±1. 5dB when the attenuator is set to 70dB. If not, make adjustments according to "5.4.5 (1) Adjusting LCG AMP".

Cont'd

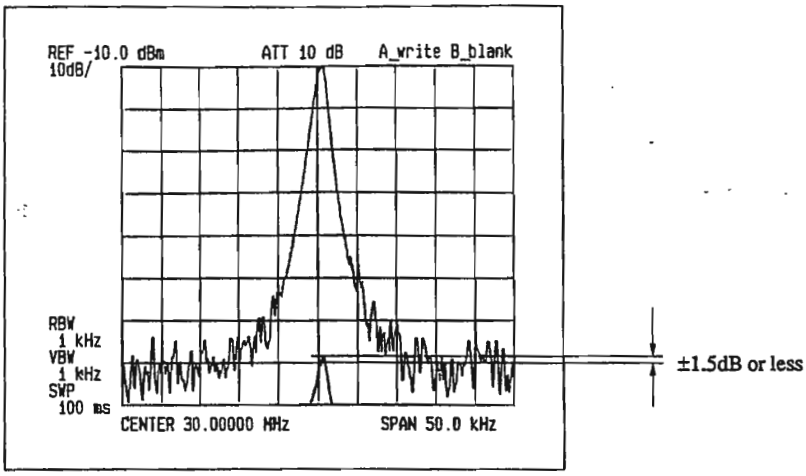

⑩ Set the spectrum analyzer to the following settings:

CENTER FREQ	:	50MHz
FREQ SPAN	:	1kHz
RBW	:	30Hz
REF LEVEL	:	-10dBm
12div display		

⑪ Input a 50MHz, -10dBm signal from the signal generator to the spectrum analyzer.

⑫ Adjust the output level of the signal generator so that the spectrum peaks at -10dBm when the attenuator is set to 0dB.

⑬ Confirm that the spectrum peaks at -120dBm ±2dB when the attenuator is set to 110dB.

Cont'd

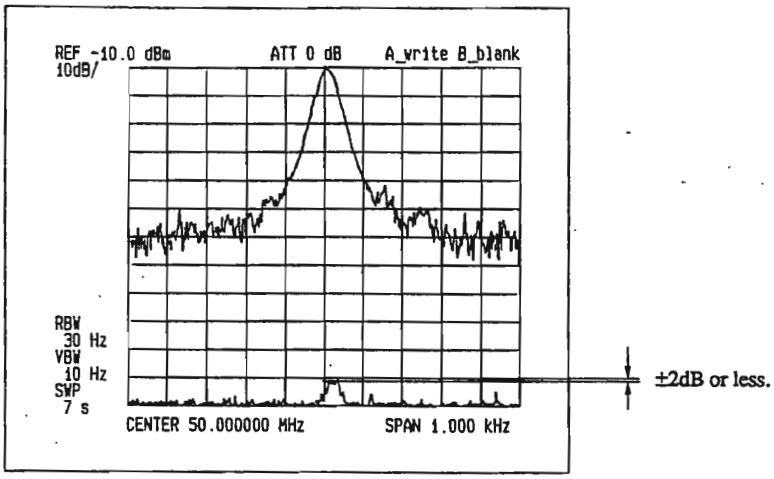
REF -10.0 dBm
10dB/
ATT 0 dB
A_write B_blank
RBW
30 Hz
VBW
10 Hz
SWP
7 s
CENTER 50.000000 MHz
SPAN 1.000 kHz
±2dB or less.

4.4.5 Testing LIN Linearity

Procedure

① Set the spectrum analyzer as follows from the preset condition.

CENTER FREQ	:	30MHz
SPAN	:	2MHz
RBW	:	100kHz
REF LEVEL	:	-10dBm
LINEAR DISPLAY MODE		

② Connect a signal generator to the spectrum analyzer through an external attenuator.

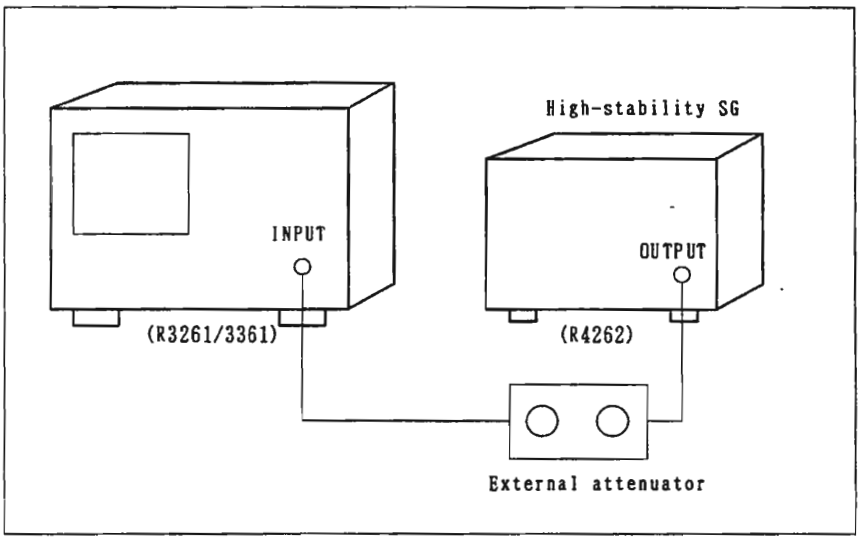

③ Set the signal generator so that it puts out a 30MHz, -10dBm signal.

④ Adjust the output level of the signal generator so that the spectrum peaks at the uppermost scale on the screen.

⑤ Using the marker, read the peak level of the spectrum.

⑥ Set the attenuator to 6dB, and read the peak level of the spectrum using the marker.

⑦ Obtain the LIN linearity from the values determined in steps ⑤ and ⑥ above. Confirm that the LIN linearity thus obtained is 100±5%.

LIN linearity (%) = [(value in step ⑥ - value in step ⑤/2)/value in step ⑤] ×100

If the linearity is out of specification, make adjustments according to "5.4.1 (1) Adjusting LOG AMP".

4.4.6 Testing Stability of Reference Level

Procedure

① From the preset condition, set the spectrum analyzer as follows:

CENTER FREQ	:	30MHz
FREQ SPAN	:	5kHz
ATT	:	10dB
REF LEVEL	:	0dBm

② Input a 30MHz, 0dBm signal from a signal generator through an external attenuator to the spectrum analyzer.

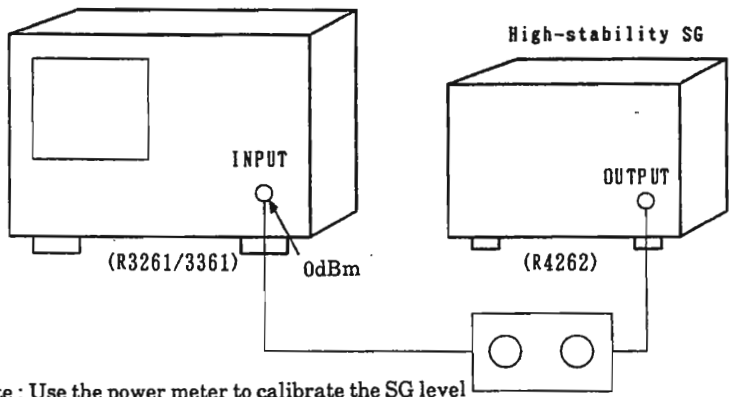

Note : Use the power meter to calibrate the SG level to be 0dBm at the end of cable, then enter it into R3261/3361.

③ Set the attenuator to 0dB, and read the peak level of the input waveform using the marker. Confirm that this level is within ±0.3dB of the REF LEVEL setting.

Cont'd

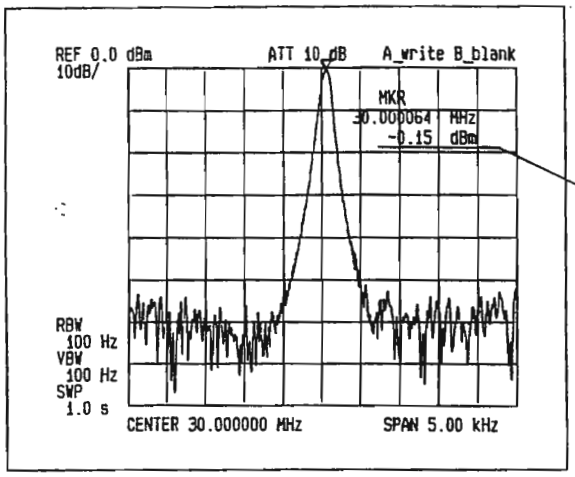

±0.3 dB or less to the setting value.

④ Change the REF LEVEL and attenuator settings as shown in Table 4-9 and confirm that the deviation from each setting is within ±0.3dB (±0.7dB : REF LEVEL -60dB, -70dB). If not, make adjustments according to "5.4.3 Resolution Band Switching Between".

Table 4-9 REF LEVEL and External Attenuator Settings

REF LEVEL [dBm]	0	-10	-20	-30	-40	-50	-60	-70
External attenuator [dB]	0	10	20	30	40	50	60	70
Specifications [dB]	±0.3	±0.3	±0.3	±0.3	±0.3	±0.3	±0.7	±0.7

4.4.7 Testing Stability of Input Attenuator Changeover

Procedure

① Input a 50MHz, -10dBm signal from a signal generator to the spectrum analyzer through an external attenuator set to 40dB.

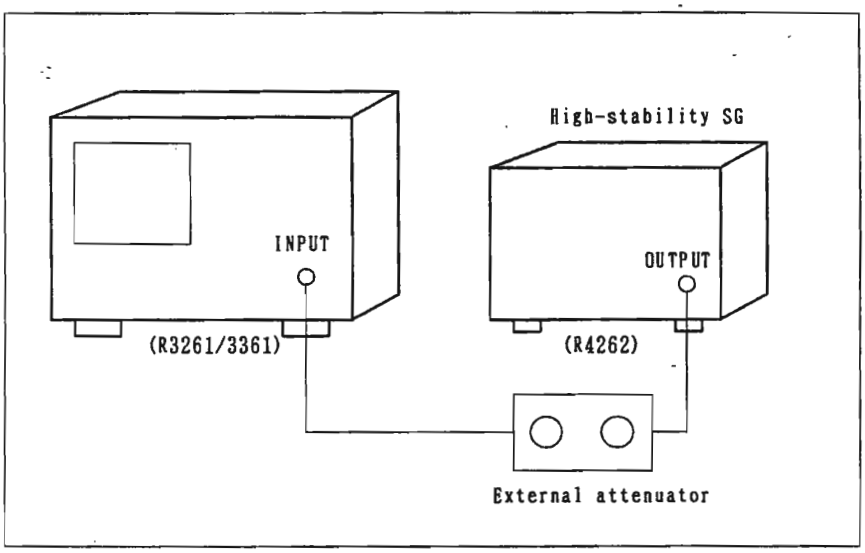

② From the preset condition, set the spectrum analyzer as follows:

CENTER FREQ	:	50MHz
FREQ SPAN	:	10kHz
RBW	:	3kHz
ATT	:	10dB
dB/div	:	1dB/
REF LEVEL	:	-45dBm

③ Adjust the output level of the signal generator so that the spectrum peaks at the center of the screen.

④ Set the external attenuator to 30dB, and set the spectrum analyzer to the following settings:

ATT : 20dB

REF LEVEL : -35dBm

Then confirm that the difference between the current indication and the indication for the 10dB attenuation is with ±1.0dB.

Cont'd

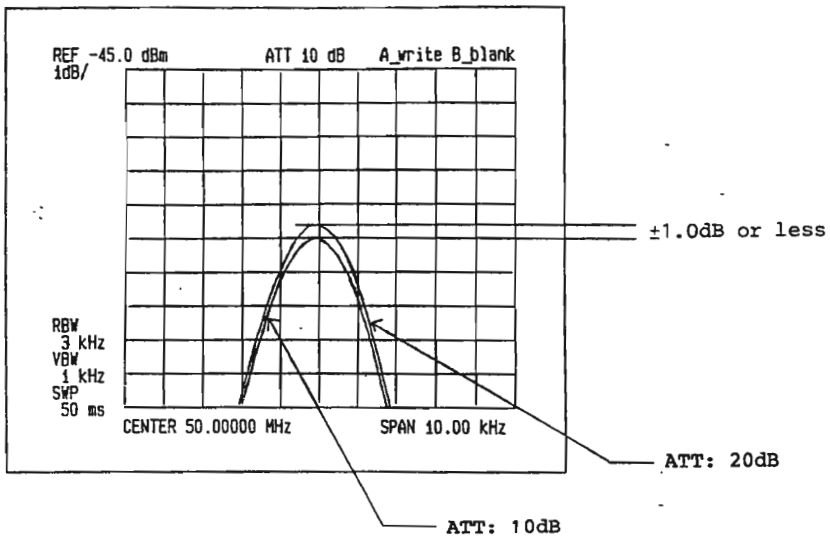

⑤ Change the ATT, external attenuator and REF LEVEL settings as shown in Table 4-10. Confirm that the stability of the input attenuator changeover is within ±1.0dB of the 10dB ATT setting.

Table 4 - 10 Testing Stability of Input Attenuator Changeover

ATT [dB]	10	20	30	40	50
External attenuator [dB]	40	30	20	10	0
REF LEVEL [dBm]	-45	-35	-25	-15	-5

4.4.8 Testing Frequency Response

Procedure

① Set the spectrum analyzer as follows from the preset condition:

ATT	:	10dB
dB/div	:	1dB/
CENTER FREQ	:	1GHz
SPAN	:	2GHz
REF LEVEL	:	-15dBm

② **Input a signal of -20dBm at a frequency of between 100kHz and 2GHz to the spectrum analyzer and confirm that the deviation as read on the screen for each frequency is within ±0.5dB.**

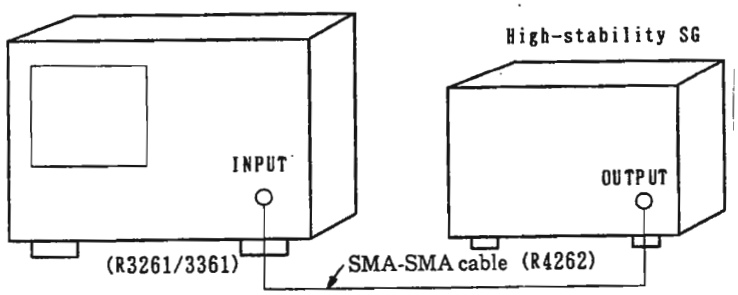

Note : Use the power meter to calibrate the SG level at the end of cable, then enter it into R3261/3361.

③ Set the spectrum analyzer to the following settings:

START FREQ	:	0MHz
STOP FREQ	:	**3.6GHz (2.6GHz for R3261A,C/R3361A,C)**

④ **Input to the spectrum analyzer a signal of -20dBm at a frequency between 9kHz and 3.6GHz (2.6GHz for R3261A,C/R3361A,C), and confirm that the deviation as read on the screen for each frequency is within ±1dB.**

Cont'd

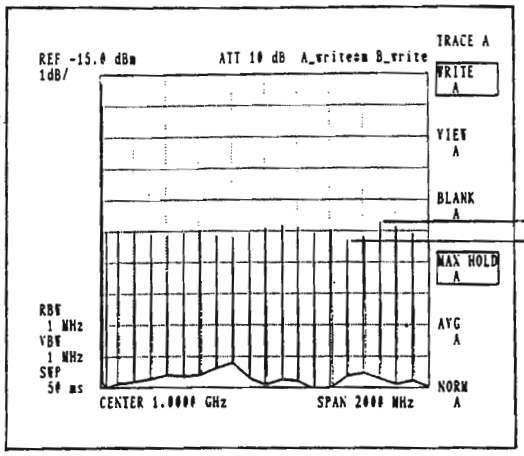

Confirm that the deviation for each frequency is within ±0.5dB

4.4.9 Testing Spurious Response

Procedure

① From the preset condition, set the spectrum analyzer as follows:

CENTER FREQ	:	500MHz
FREQ SPAN	:	1000MHz
REF LEVEL	:	-10dBm
RBW	:	1MHz
VBW	:	10kHz
ATT	:	0dB

② Input a signal of -10dBm from a low-distortion signal generator to the spectrum analyzer. A signal from a signal generator with a low-pass filter capable of reducing the level of the second harmonics by a least 60dB will also work.

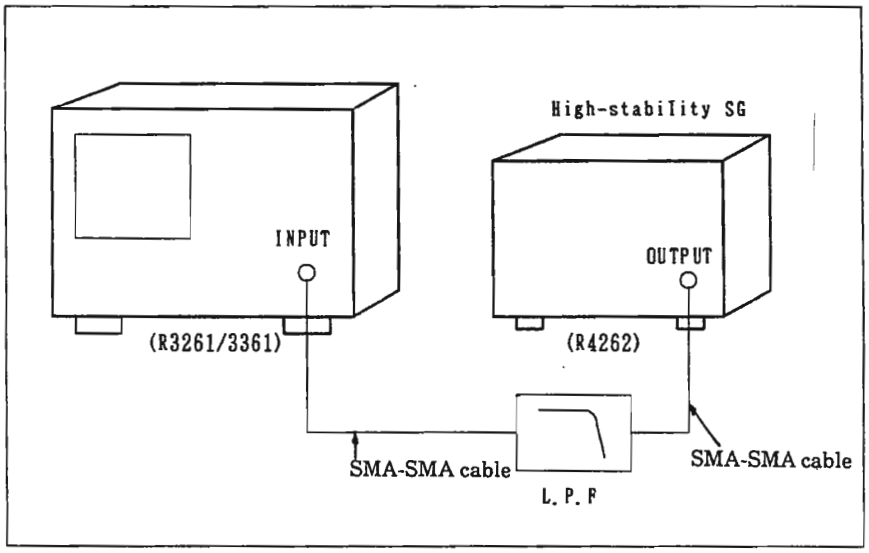

③ Change the output frequency of the low-distortion signal generator from 10MHz to 500MHz and confirm that the signal level of the second harmonics is lower than that of the reference waveform by at least 50dB(equivalent to 70dB for -30dBm input).

Cont'd

④ For low-distortion signal generator frequencies of 500MHz or over, change the setting of the spectrum analyzer as shown in Table 4-11.

Table 4-11 CENTER FREQ AND SPAN for Dynamic Range Test

Frequency [MHz] SG	R3261A,C/B,D R3361A,C/B,D Set	
	CENTER FREQ [GHz]	SPAN [GHz]
10 to 500	0.5	1
500 to 1000	1.5	1
1000 to 1500 (1300)	2.5	1
1500 to 1800	3.3	0.6

( )·····R3261A,C/R3361A.C

4.4.10 Testing Stability of Sweep Time

Procedure

① Input a 30MHz, -5dBm, amplitude-modulated signal (100Hz, 30% modulation) from the signal generator to the spectrum analyzer.

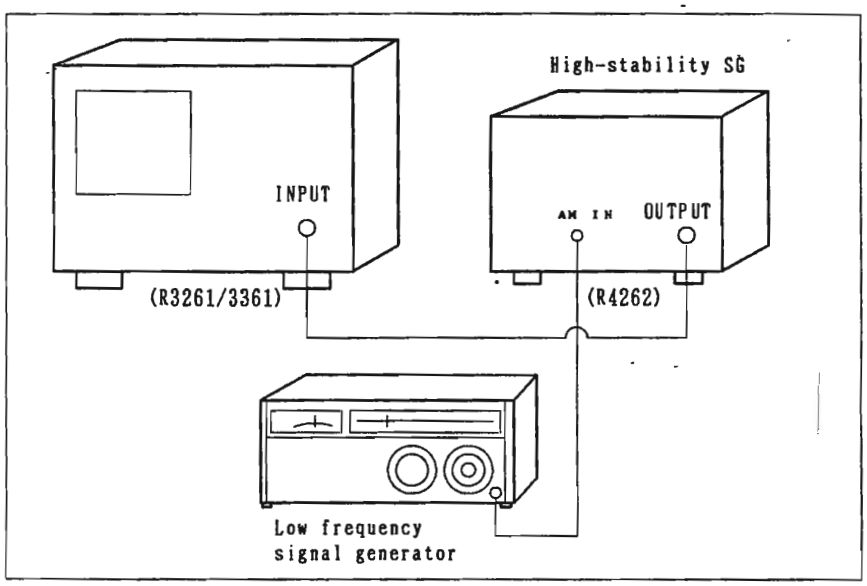

② From the preset condition, set the spectrum analyzer as follows:

CENTER FREQ	:	30MHz
SPAN	:	0kHz
RBW	:	30kHz
dB/div	:	1dB
TRIGGER	:	VIDEO
SWEEP TIME	:	50ms

③ Confirm that there are 5 cycles ±3/20 cycles (±1. 5ms, ±0.3div.) of the amplitude-modulated waveform on the screen.

Cont'd

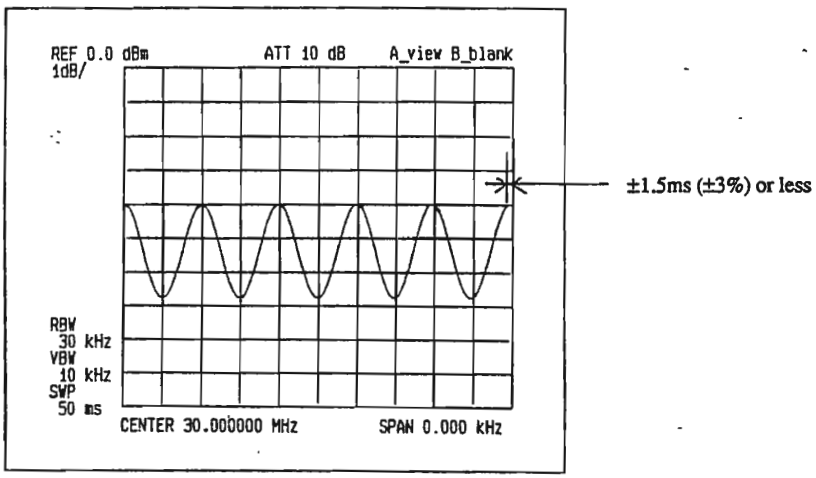
REF 0.0 dBm
1dB/
ATT 10 dB
A_view B_blank
RBW
30 kHz
VBW
10 kHz
SWP
50 ms
CENTER 30.000000 MHz
SPAN 0.000 kHz
±1.5ms (±3%) or less

4.4.11 Testing Stability of TG Output Level (For R3361A,C/B,D only)

Procedure

① **Reset and then set the spectrum analyzer (R3361A,C/B,D only) to the following settings:**

CENTER FREQ	:	30MHz
FREQ SPAN	:	0Hz
TG	:	ON
TG LEVEL	:	-10dBm

② Connect an RF power meter to the spectrum analyzer at the TG OUTPUT to measure the TG output level. Confirm that the TG output level is -10dBm ±0.5dB. If not, make adjustments according to "5.4.6 (1) Adjusting 1dB Attenuator Output Level Stability".

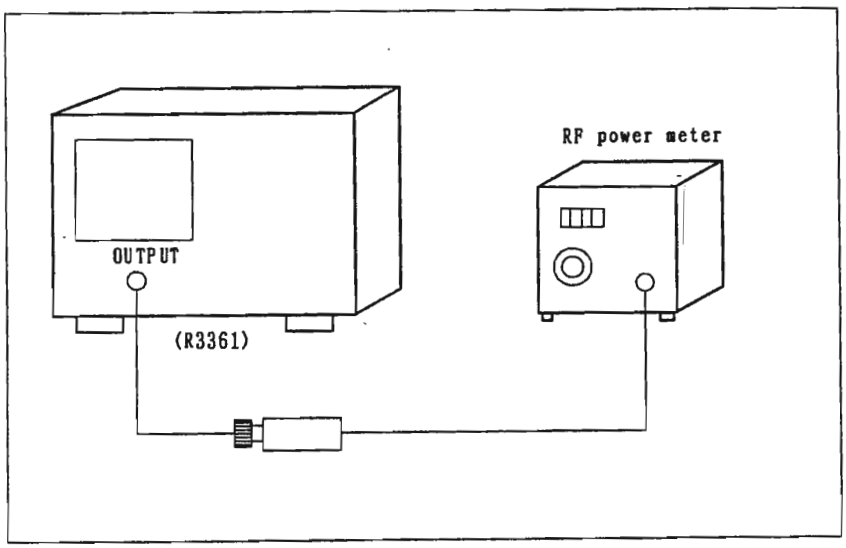

4.4.12 Testing TG Frequency Response (For R3361A,C/B,D only)

Procedure

① Reset and then set the spectrum analyzer (R3361A,C/B,D only) to the following settings:

CENTER FREQ	:	30MHz
FREQ SPAN	:	0Hz
TG	:	ON
TG LEVEL	:	-10dBm

② Connect an RF power meter with the spectrum analyzer at the TG output.

③ Confirm that the TG output level is ±0.7dB for the output level in CENTER FREQ of 30MHz when the CENTER FREQ of the R3361A,C/B,D is changed in a range of 100kHz to 1.0GHz.

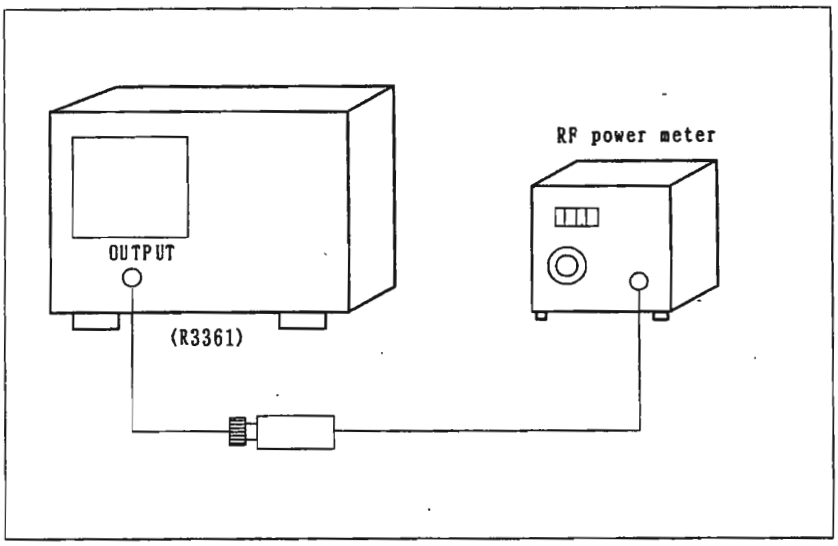

④ Confirm that the TG output level is ±1.5dB for the output level in CENTER FREQ of 30MHz when the CENTER FREQ of the spectrum analyzer is changed in a range of 9kHz to 2.6GHz.

⑤ Confirm that the TG output level is ±2.0dB for the output level in CENTER FREQ of 30MHz when the CENTER FREQ of the spectrum analyzer is changed in a range of 9kHz to 3.6GHz.

4.4.13 Testing Stability of TG Output Level Changeover (For R3361A,C/B,D only)

Procedure

① Reset and then set the spectrum analyzer (R3361A,C/B,D only) to the following settings:

CENTER FREQ	:	30MHz
FREQ SPAN	:	0Hz
TG	:	ON
TG LEVEL	:	-10dBm

② Connect an RF power meter to the spectrum analyzer to measure the TG output level.

③ Set the TG LEVEL to -15dBm, and take reading on power meter.

④ Confirm that the difference between the readings of steps③ and④above is 5dB±1dB.

⑤ For a range from 0dBm to -50dBm of the TG output level, test according to Table 4-12.

Table 4-12 Stability of TG output Level Changeover

TG LEVEL [dBm]	0	-5	-10	-15	-20	-25	-30	-35	-40	-45	-50
Output level difference at -10dBm setting	+10 ±1	+5 ±1	0	-5 ±1	-10 ±1	-15 ±1	-20 ±1	-25 ±1	-30 ±1	-35 ±1	-40 ±1

⑥ Perform steps ② to ④ for 1. 5GHz and 3.0GHz center frequencies. The deviations for 1.5GHz and 3.0GHz must be within ±2dB and ±3dB respectively.

4.4.14 Testing Output Spurious (For R3361A,C/B,D only)

Procedure

① Reset and then set the spectrum analyzer (R3361A,C/B,D only) to the following settings:

CENTER FREQ	:	30MHz
FREQ SPAN	:	0Hz
TG	:	ON
TG LEVEL	:	0dBm

② Connect an external spectrum analyzer to the R3361A,C/B,D at the TG OUTPUT.

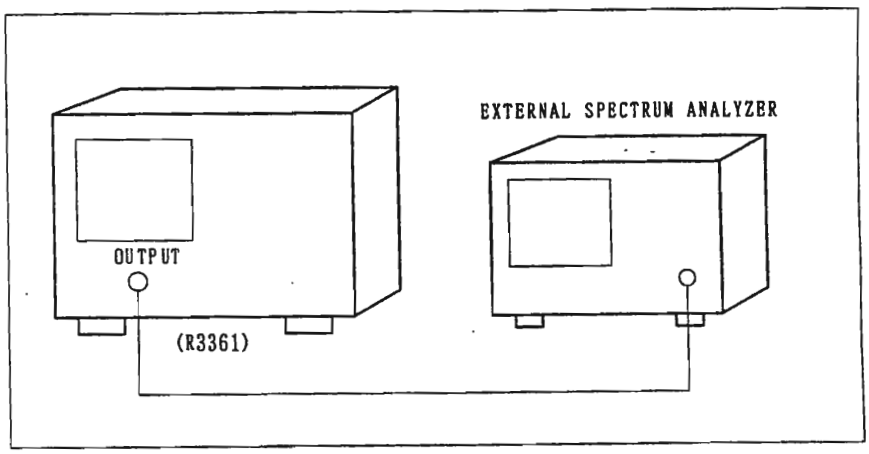

③ Change the center frequency to up to 3.6GHz for the R3361B/D, or 2.6GHz for the R3361A/C, and confirm that the harmonics spurious is lower than the basic waveform by at least -20dBc and that the non-harmonics spurious is lower by at least -30dBc.

4.4.15 Testing TG Leak (For R3361A,C/B,D only)

Procedure

① Reset and then set the spectrum analyzer (R3361A,C/B,D only) to the following settings:

REF LEVEL	:	-80dBm
SWP TIME	:	50sec
RBW	:	100Hz
VBW	:	1Hz
ATT	:	0dB
TG	:	ON
TG LEVEL	:	0dBm

② Execute the TG FREQ CAL (AUTO) to compensate for any tracking error. Make no connection to the INPUT or TG OUTPUT connector.

③ Confirm that TG leak is not more than -110dBm for up to 3GHz, and not more than -100dBm for up to 3.6GHz.

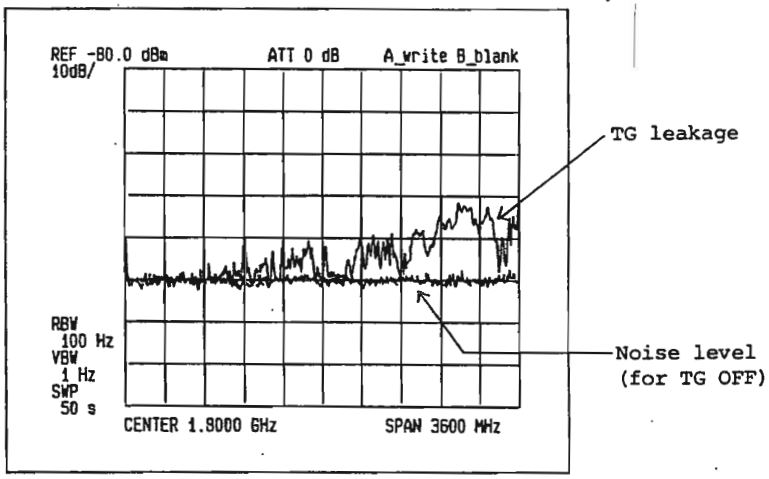

4.5 Test Report

The test report form for the spectrum analyzer is given below.

R3261A,C/B,D R3361A,C/B,D Test Report

Item		Specification	Measurement
1. CAL signal test			
1. CAL signal level		-20dBm±0.3dB	dBm
2. Test using CAL signals			
1. Noise side band	20kHz offset	-105dBc/Hz	dBc/Hz
2. Frequency drift		300Hz/min	
3. Stability of resolution bandwidth (3dB bandwidth)	RBW 1MHz	±20%	%
	RBW 300kHz		%
	RBW 3kHz		%
4. Resolution bandwidth selectivity (60dB : 3dB)	RBW 1MHz	15 : 1	:
	RBW 300kHz		:
	RBW 3kHz		:
5. QP bandwidth stability (6dB bandwidth)	QP 120kHz	110kHz to 130kHz	kHz
	QP 9kHz	8kHz to 10kHz	kHz
	QP 200Hz	170Hz to 220Hz	Hz
6. Marker indication stability (normal mode)	SPAN 20MHz	±1.05MHz	MHz
	SPAN 10MHz	±550kHz	kHz
	SPAN 2MHz	±160kHz	kHz
7. Marker indication stability (counter mode)	SPAN 20Hz	±1Hz	Hz
8. Average noise level		-121dBm+1.55f	dBm
9. Residual response		-100dBm	dBm
10. Switchover stability of resolution bandwidth		±0.3dB	dB

R3261A,C/B,D R3361A,C/B,D Test Report (Cont'd)

Item		Specification	Measurement
3. Test Using measuring equipment			
1. Reference oscillator stability		±2 x 10^{-8}	x10
2. Center frequency stability	SPAN 20MHz	±450kHz	kHz
	SPAN 10MHz	±250kHz	kHz
	SPAN 2MHz	±60kHz	kHz
	SPAN 1kHz	±50Hz	Hz
3. Frequency span stability	SPAN 2GHz	±3%	%
	SPAN 10MHz	±3%	%
	SPAN 2MHz	±5%	%
4. LOG linearity		±0.2dB/1dB	dB
		±1.0dB/10dB	dB
		±1.5dB/70dB	dB
		±2.0dB/110dB	dB
5. LIN linearity		±5% of Full Scale	%
6. Reference level stability	REF 0dBm to -50dBm	±0.3dB	dB
	REF -60dBm to -70dBm	±0.7dB	dB
7. Input attenuator changeover stability		±1.0dB	dB
8. Frequency response	100kHz to 2GHz	±0.5dB	dB
	9kHz to 3.6GHz	±1dB	dB
9. Spurious response	-10dBm INPUT	-50dBc	dBc
10. Sweep time stability		±3%	%
11. TG output level stability		±0.5dB	dB

R3261A,C/B,D R3361A,C/B,D Test Report (Cont'd)

Item		Specification	Measurement
12. TG output frequency response	100kHz to 1GHz	±0.7dB	dB
	9kHz to 2.6GHz	±1.5dB	dB
	9kHz to 3.6GHz	±2.0dB	dB
13. Stability of TG output level changeover	100kHz to 1GHz	±1.0dB	dB
	9kHz to 2.6GHz	±2.0dB	dB
	9kHz to 3.6GHz	±3.0dB	dB
14. Output spurious	Harmonics spurious	-20dB	dB
	Non-harmonic spurious	-30dB	dB
15. TG leakage	to 3.0GHz	-110dBm	dBm
	to 3.6GHz	-100dBm	dBm

5. ADJUSTMENTS

5.1 Measurement Standards & Support Test Equipment Performance Requirements

Minimum-Use-Specifications (MUS) are the calculated minimum performance specifications criteria needed for the Measurement Standards (MS) and Support Measuring & Test Equipment (S-M & TE) to be used for the comparison measurements required in the Adjustment Procedure (AP) process.

The MUS is developed through uncertainty analysis and is calculated through assignment of a defines and documented uncertainty/accuracy ratio or margin between the specified tolerances of the UUT and the capability (uncertainty specification) required of the measurement standards system. MUS is required to assist a measurement specialist in the evaluation of existing or selection of alternate measurement standards equipment.

CAUTION

The instructions in this AP relate specifically to the equipment and conditions listed in Section 5.2. If other equipment is substituted, the information and instructions must be interpreted and revised accordingly.

MS and S-M & TE Environmental Range :	Temperature ;	18°C to 28°C
	Relative Humidity ;	30 to 70%

MS and S-M & TE Warm-up/Stabilization Period Requirements : 2 Hours

Table 5-1 Measurement Standards (MS) Performance Requirements

Equipment Generic Name (Quantity)	Minimum Use Specifications (MUS)	Manufacturer/Model /Option Applicable
Frequency standard	Output frequency: 10 MHz Stability: 5×10^{-10}/day Output impedance: Approx. 50 Ω Output voltage: 1 Vp-p or more	TR3110
Frequency comparator	Frequency: 10 MHz 1×10^{-9} frequency detectable	
Synthesized signal generator	Frequency range: 10 MHz to 4 GHz Residual SSB phase noise: 1 kHz offset < −115 dBc/Hz 10 kHz offset < −125 dBc/Hz 100 kHz offset < −130 dBc/Hz Power level range: −100 to +10 dBm	R4262
Spectrum analyzer	Frequency range: Up to 100 MHz With built-in TG	R3361A, C/B,D
Power meter	Accuracy : ±0.02 dB Decibel relative mode	HP436A
Digital multimeter	DC voltage resolution: 5 digits or more	TR6851
Power sensor	Frequency range: 10 MHz to 18 GHz Power range: 1 μW to 100 mW	HP8481A
Impedance generator		R14602

Table 5-2 Support Measuring & Test Equipment (S-M&TE) Performance Requirements

Equipment Generic Name (Quantity)	Minimum Use Specifications (MUS)	Manufacturer /Model/Option Applicable
Cable	Length: 150 cm Connection: BNC (male) at both ends	MI-09
Cable	Frequency range: DC to 26.5 GHz Maximum SWR: < 1.45 at 26.5 GHz Length: Approx. 70 cm Connector: SMA (male) at both ends	A01002
Cable	Frequency: 21.4 MHz Length: 100 cm Connector: UM (male), BNC (male)	MC-36A
Adapter	Type N (male) to SMA (female)	HRM-554S
Adapter	Type N (male) to BNC (female)	JUG -201A/U (Hirose)
Probe	Frequency: 3.5789 MHz 10:1 Impedance: 10 MHz	P6133 (Tektronix)

5.2 Preliminary Operations

WARNING

Always makes sure spectrum analyzer's power supply cord is plugged into a 3-hole grounded outlet or 2-hole outlet with grounded adapter. You can be fatally shocked if you fail to follow this rule.

Do not touch live circuits when calibrating instrument.

(1) Review this entire procedure before starting calibration procedure.

(2) Always operate the instrument on AC 100V (120V, 200V, 220V, or 240V) ±10% with a line frequency of 50Hz or 60Hz.

(3) Always confirm that the POWER switch is OFF before connecting the power cable to the AC line.

(4) Spectrum analyzer has a self-calibration function. This function compensates for adjusting shift caused by change with age of software. For calibration, turn off this function.

Operation Procedure : [SHIFT] [7] [CAL COOR ON/OFF]
(SOFT KEY 6)

5.3 Calibration Process

LOCATION

(1) IF (BLQ-015668)

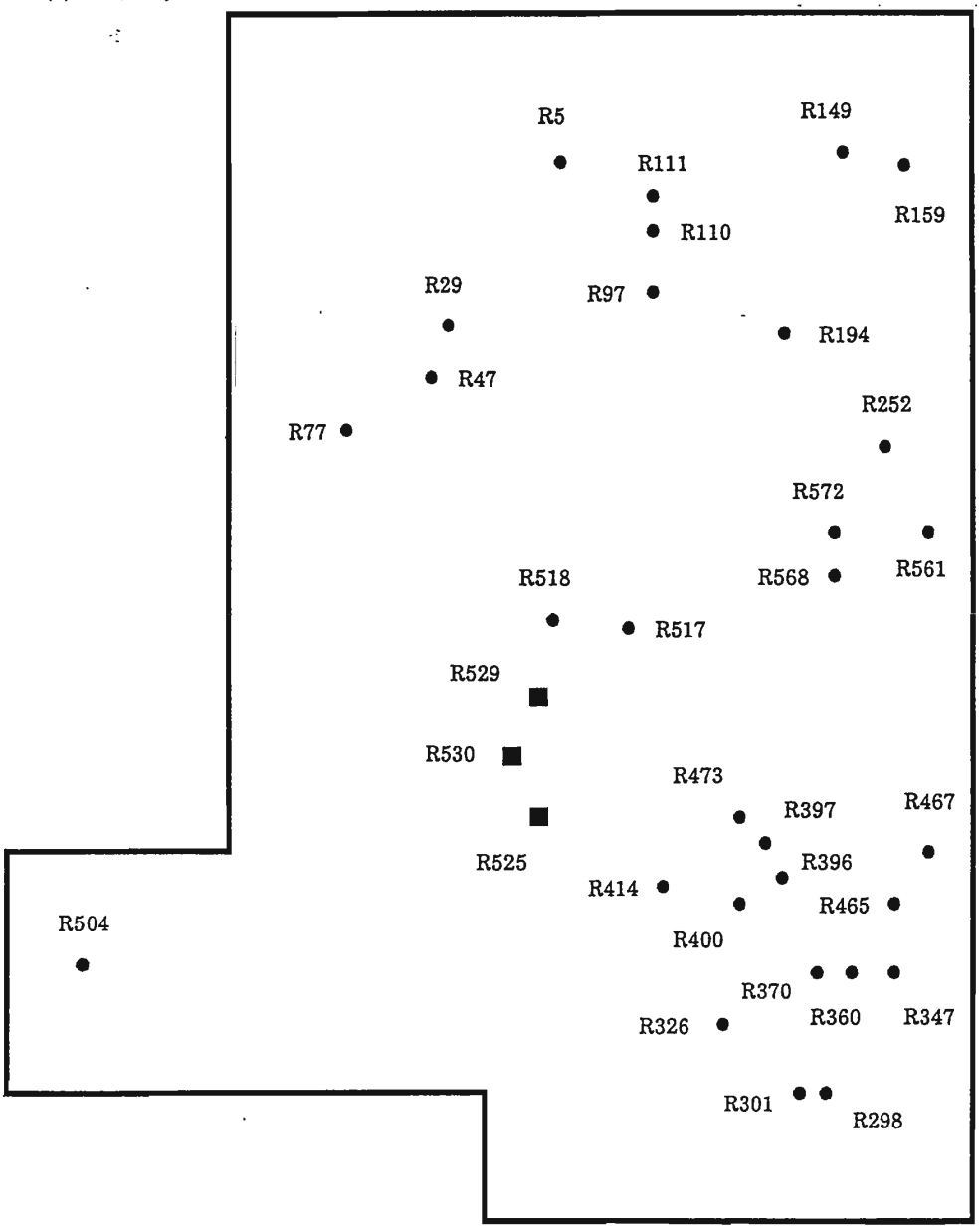

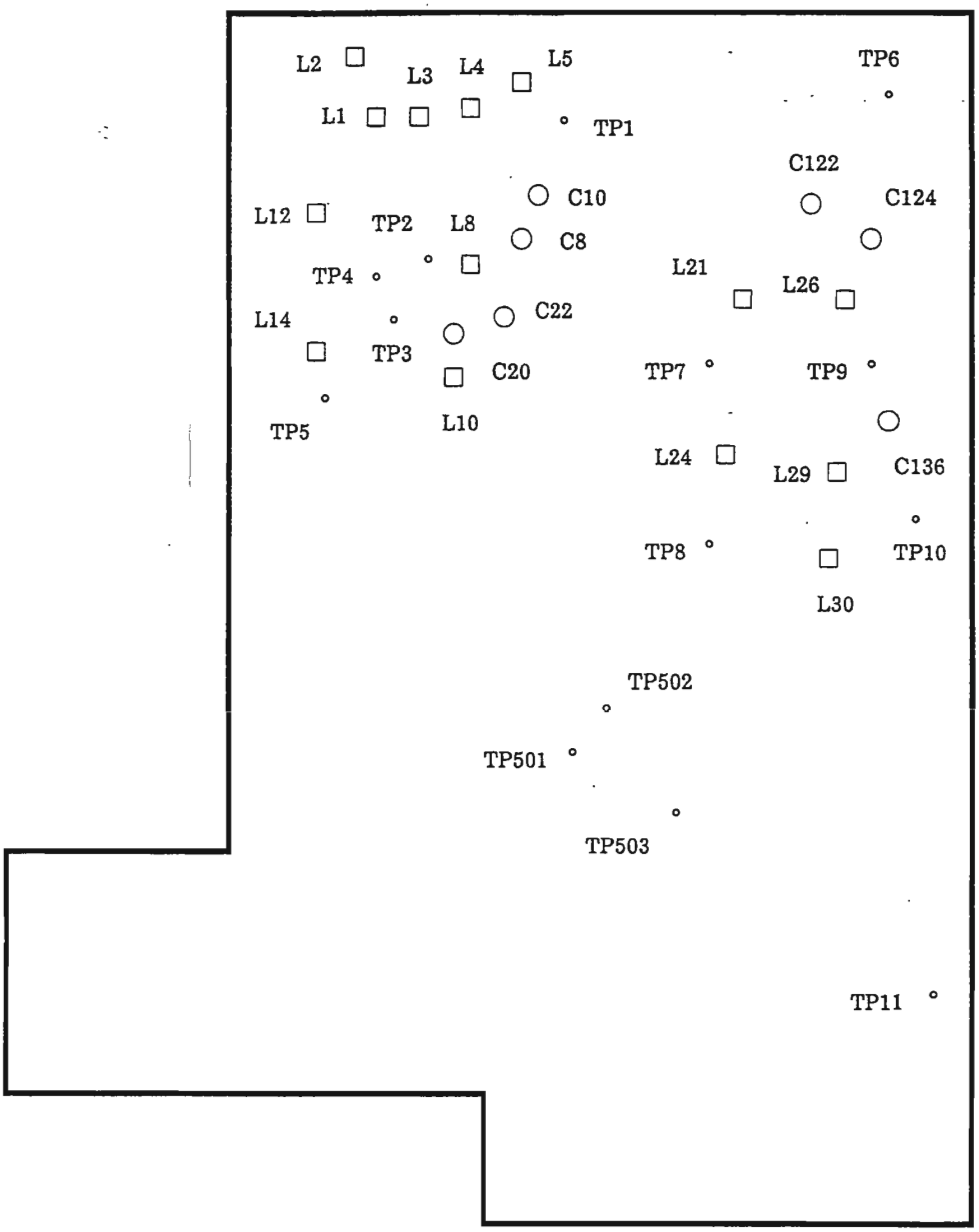
L2
L3
L4
L5
TP6
L1
TP1
C122
C10
C124
L12
TP2
L8
C8
TP4
L21
L26
L14
C22
TP3
C20
TP7
TP9
TP5
L10
L24
L29
C136
TP8
TP10
L30
TP502
TP501
TP503
TP11

(2) RF CONT (BLL-015672)

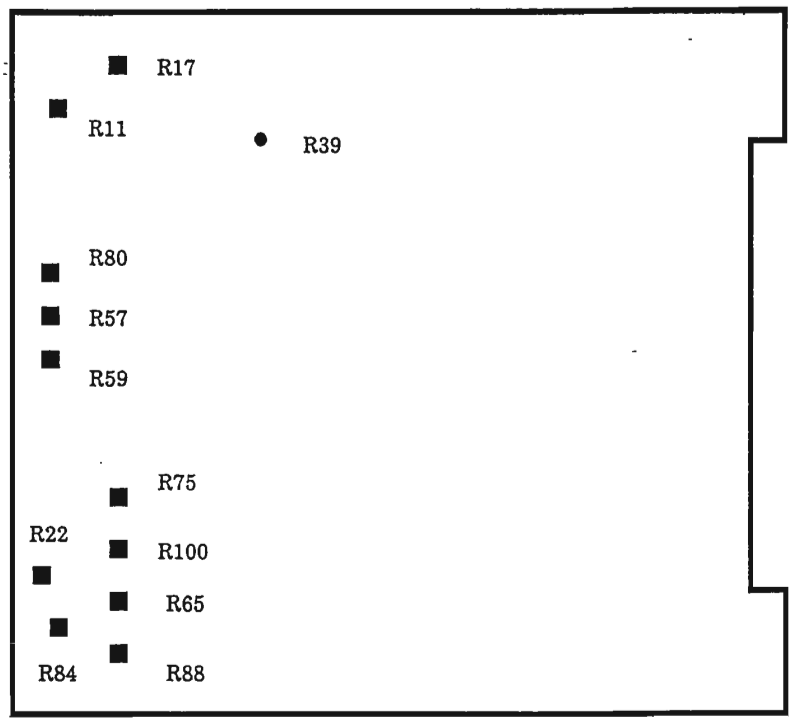

(3) ALC CONT (BLC-015680)

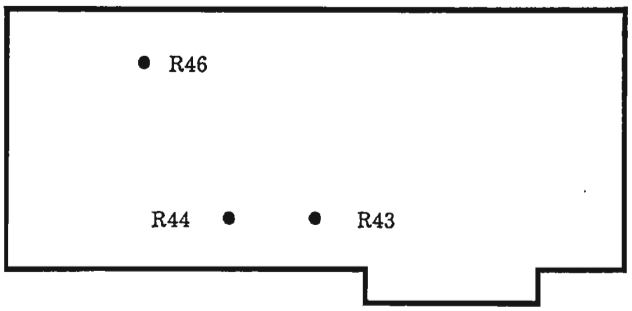

(4) CAL AMP (BLB-015646)

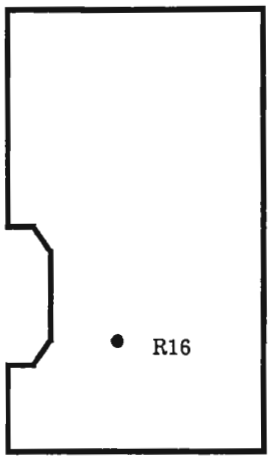

(5) YTO DRIVER (BLB-015647)

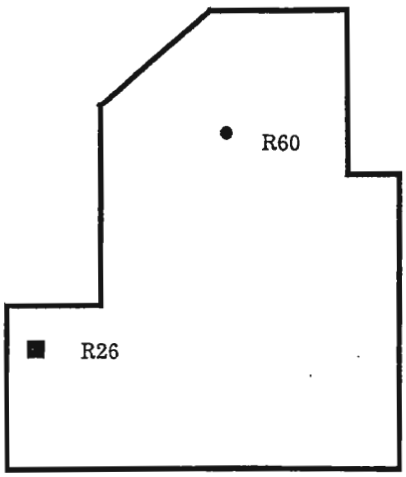

5.3.1 Center Frequency Accuracy Adjustment

(1) 10MHz Frequency Reference Adjustment

- DESCRIPTION

  Connect the signal cable between the 10MHz terminal of the Frequency Standard unit and the Frequency Comparator unit. Also, connect the cable between the 10MHz REF OUT terminal at the rear panel of R3261/3361 and the Frequency Comparator unit. Adjust the internal crystal oscillator of the R3261/3361 by comparing the signal.

- EQUIPMENT

  Frequency Standard unit TR3110
  Frequency Comparator (supporting 10MHz, 1×10^{-9} signal detection)
  Cables ..... BNC (male), 150cm long MI-09 (TWO)

- CONNECTION

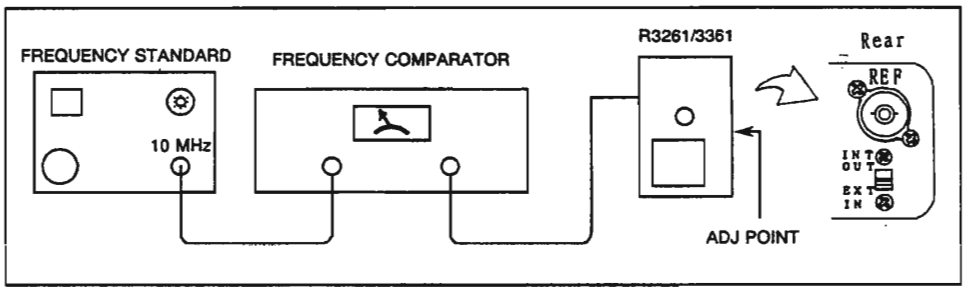

- ASSEMBLY ADJUSTED

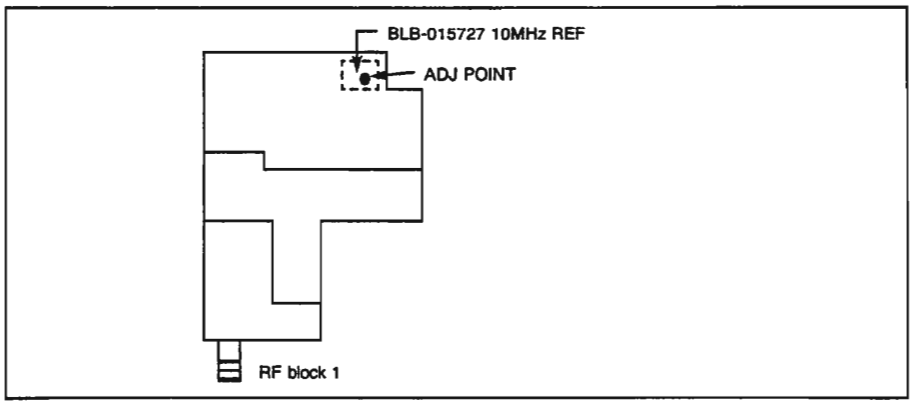

- PROCEDURE

Note: Allow the R3261/3361 warm up for at least 30 minutes before performing this adjustment.

① Remove the lower cover of R3261/3361 and then connect the equipment as shown in the figure of CONNECTION.

② Set the 10MHz REF of the R3261/3361 to INT.
Change the rear panel S.W.

CAUTION

When the 10MHz reference is set to EXT, the crystal oscillator is not warmed up. If the reference is set to EXT, set the reference to INT and allow 30 minutes for the crystal oscillator warm up.

③ Adjust the 10MHz REF so that the indicator of frequency comparator reaches within $\pm 1 \times 10^{-8}$.

ADJ 10MHz REF (BLB-015727)

④ Attach the cover.

(2) YTO ADJUSTMENT

- DESCRIPTION

Adjust the offset tune of YTO with the center frequency set to 0Hz and 3.6GHz, respectively. The first local PLL must be turned off.

- EQUIPMENT

High-stability SG	(to 3.6GHz or to 2.4GHz)	R4262	
Cables	SMA (male), 70cm long	AA01002	
Adapters	N (male) to SMA (female),	HRM-554S	(TWO)

Use the adapter assembly of the impedance 75Ω for N type R3261/3361.

- CONNECTION

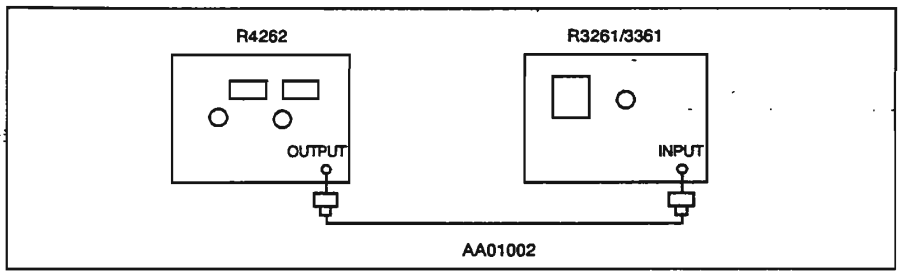

- ASSEMBLY ADJUSTMENT

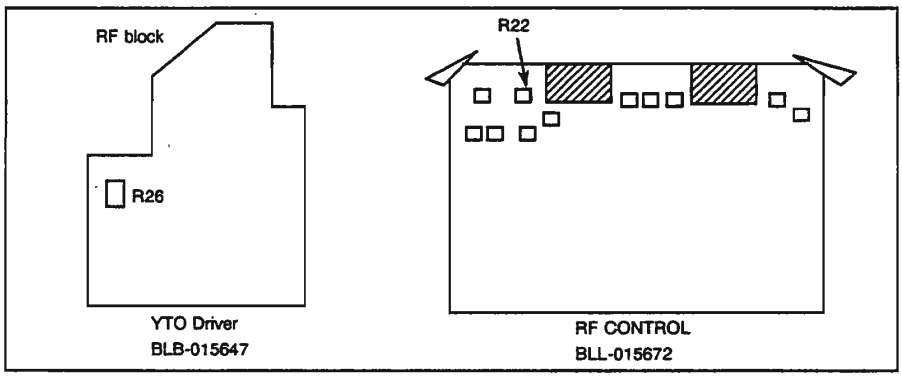

- PROCEDURE

① Remove the cover of R3261/3361 to connect as shown in the figure of CONNECTION.

② Pull out the J3 connector on RF CONT, BLL-015672.
Short 5PIN and 6PIN in J3.

③ Power on SG and R3261/3361 and warm up them for a while.

④ Setting SG

f: 3.6GHz (B type), 2.6GHz (A type)

Po: −20dBm

⑤ Setting R3261/3361 (After pressing the [PRESET] key)

SPAN: 20MHz

[SPAN] [2] [0] [MHz]

⑥ Set the **CENTER FREQUENCY** to 0Hz on R3261/3361.

CENT FREQ	0	Hz

Adjust R62 until the spectrum becomes 0Hz ±1MHz.

ADJ YTO driver (BLB-015647) R26

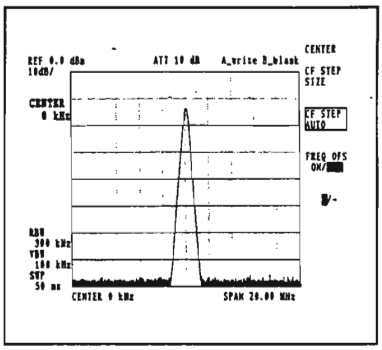

⑦ Set the **CENTER FREQUENCY** to 3.6GHz (for B type) and 2.6GHz (for A type), respectively, on R3261/3361.

CENT FREQ	3	.	6	GHz	(B type)

or

CENT FREQ	2	.	6	GHz	(A type)

Adjust R80 until the frequency of SG becomes ±1MHz.

ADJ RF CONT (BLL-015672) R80

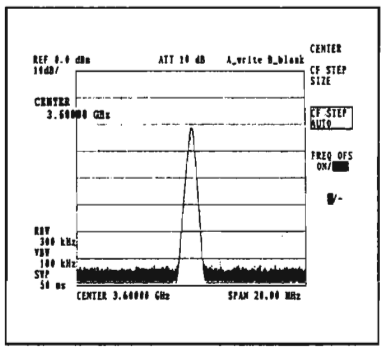

⑧ Repeat ⑥ and ⑦ until each specification is met.

⑨ Turn the power on and connect the J3 connector to the original position.

5.3.2 Frequency Span Adjustment

- DESCRIPTION

  Display two spectrums by using the SG signal and a local feed through. Adjust the MAIN SPAN and each span of 10MHz, 2MHz and Log with variable resistor.

- EQUIPMENT

  High-stability SG ..... (to 3.6GHz or to 2.4GHz) R4262
  Cables ..... SMA (male), 70cm long AA01002
  Adapters ..... N (male) to SMA (female), HRM-554S (TWO)

  Use the adapter assembly of the impedance 75Ω for N type R3261/3361.

- CONNECTION

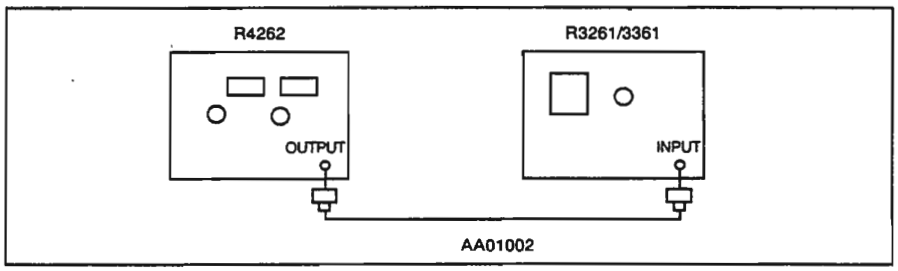

- ASSEMBLY ADJUSTMENT

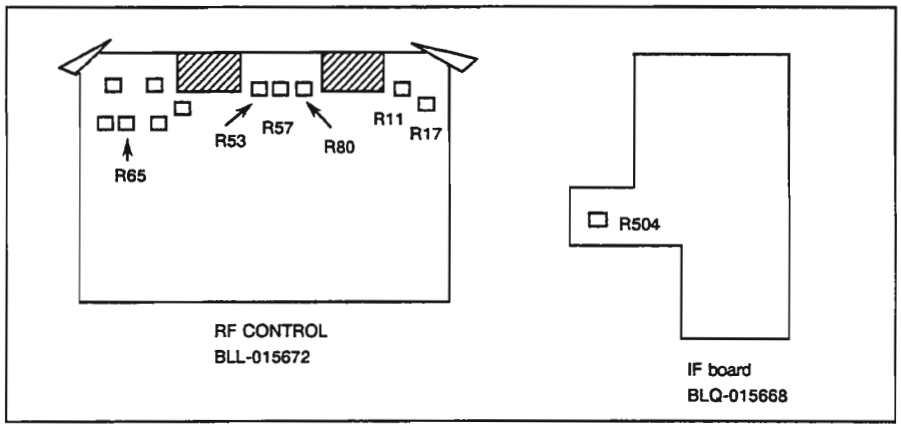

(1) MAIN SPAN

- PROCEDURE

① Remove the cover and connect as shown in the figure of CONNECTION.

② Setting SG

f: 3.24GHz (B type)
2.34GHz (A type)

Po: −20dBm

Setting R3261/3361 (After pressing the PRESET key)

SWP: 500ms

CPL | SWP | ↑ | ↑ | ↑

③ Calibration of frequency span of R3261/3361

Adjust the local feedthrough (0Hz spectrum) with VR R504 to the scale left end. Adjust frequency span from the scale left end to 9dev with R22 adding the signal from SG.

ADJ	IF board	(BLQ-015668)	R504	*OFFSET
	RF CONTROL	(BLL-015672)	R22	*GAIN

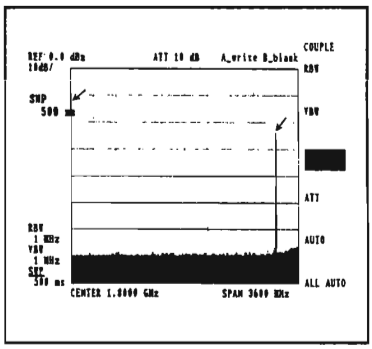

(2) 10MHz SPAN

- PROCEDURE

① The connection is the same with the MAIN SPAN adjustment.

② Setting SG

f: 8MHz

Po: −20dBm

③ Setting R3261/3361 (After pressing the [PRESET] key)

CENT FREQ: 4MHz

[CENT FREQ] [4] [MHz]

SPAN: 10MHz

[SPAN] [1] [0] [MHz]

SWP: 500ms

[CPL] [SWP] [↑] [↑] [↑]

④ Adjust R57 so that each spectrum of 0Hz and 8MHz may be positioned on the scale that is one division away from each end of the screen on R3261/3361.

ADJ RF CONTROL R57

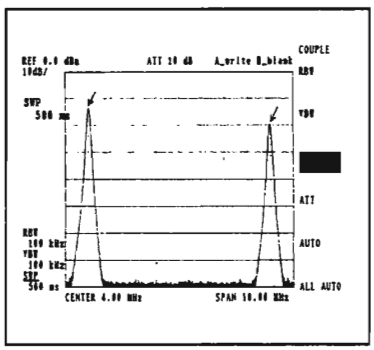

(3) 2MHz SPAN

- PROCEDURE

① The connection is the same with the MAIN SPAN adjustment.

② Setting SG

f: 1.6MHz
Po: −20dBm

③ Setting R3261/3361 (After pressing the [PRESET] key)

CENT FREQ: 800kHz

[CENT FREQ] [8] [0] [0] [kHz]

SPAN: 2MHz

[SPAN] [2] [MHz]

SWP: 500ms

[CPL] [SWP] [↑] [↑] [↑]

④ Adjust R53 so that each spectrum of 0Hz and 1.6MHz may be positioned on the scale that is one division away from each end of the screen on R3261/3361.

ADJ RF CONTROL R53

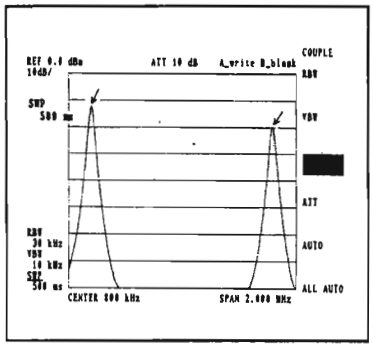

(4) LOG SPAN

- PROCEDURE

① The connection is the same with the MAIN SPAN adjustment.

② Setting R3261/3361 (After pressing the [PRESET] key)

SPAN: LOG 100 MHz to 1000MHz

[SPAN] [LOG]

Marker: PEAK SEARCH ON

[PEAK] [NEXT MENU] [PEAK CONT ON/OFF]

③ Setting SG

f: 200MHz

Po: −20dBm

Adjust R17 until the marker value becomes 200MHz±5MHz on R3261/3361.

ADJ RF CONTROL (BLL-015672) R17

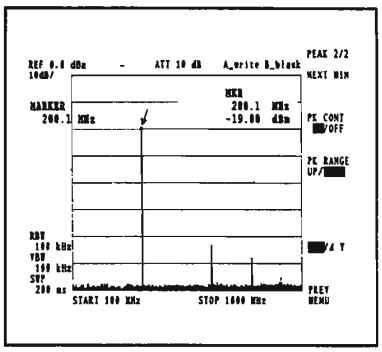

④ Changing the SG setting

f: 900MHz

Adjust R11 until the marker value becomes 900MHz±5MHz on R3261/3361.

ADJ RF CONTROL R11

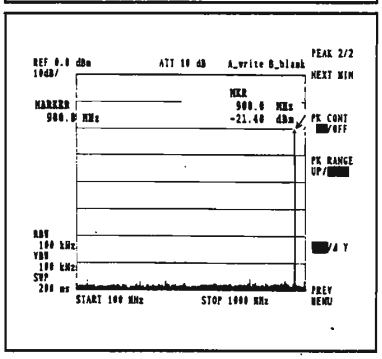

⑤ Repeat ③ and ④ until each specification is met.

⑥ Reinstall the cover.

5.3.3 Resolution Bandwidth Accuracy Adjustment

- DESCRIPTION

  IF filter consists of eight band-pass filters; four of them are made of L and C; others are made of a crystal filter.

  Resolution waveforms of the IF filter can be observed with a external spectrum analyzer possessing TG.

- EQUIPMENT

  External Spectrum Analyzer with TG .. R3361A, C/B, D
  Impedance converter R14602
  10MΩ Probe P6133
  Cables ..... UM-BNC, 100cm long MC-36A
  Adapters ..... N (male) to BNC (female), JUG-201 A/U

- CONNECTION

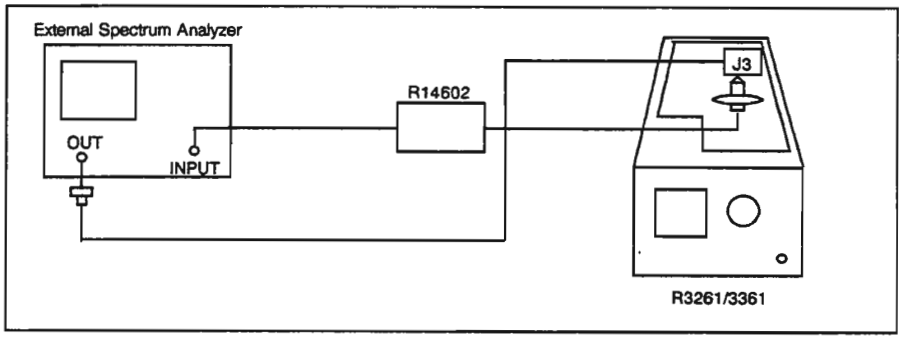

- ASSEMBLY ADJUSTMENT

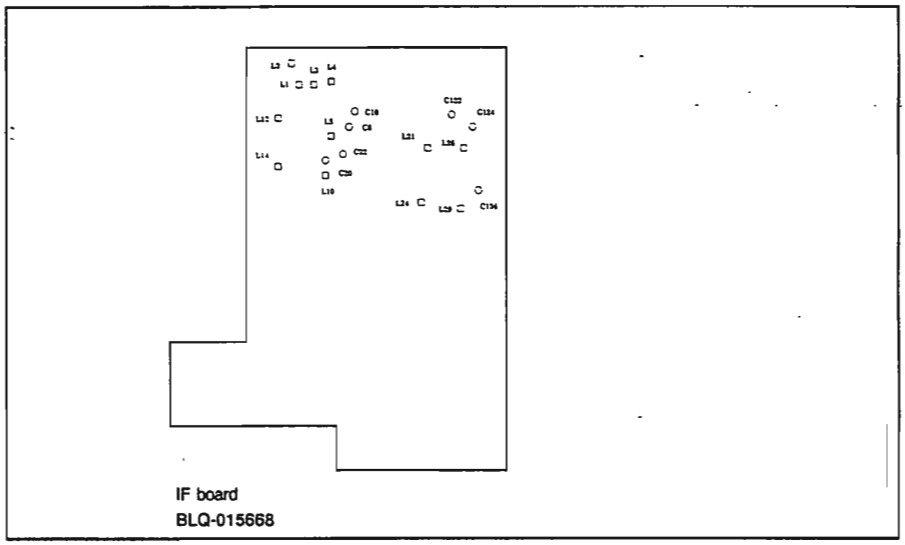

- PROCEDURE

① Remove the upper cover of R3261/3361 and then remove the shield case of the IF board.

② Connect TG Out of external spectrum analyzer to IF board (BLQ-015668) J3.

③ Connect the 10MΩ probe to input of the external spectrum analyzer passing the impedance converter, and set as follows:

CENTER FREQ : 3.5789MHz
TG LEVEL : −20dBm

④ Setting R3261/3361 (After pressing the [PRESET] key)

CAL CORRECTION: OFF

[SHIFT] [1] [CAL CORR ON/OFF]

⑤ Connect the 10MΩ probe to IF board (BLQ-015668) TP1, and observe the form of 3.5789MHz band-pass filter. Adjust L1, L2, L3 and L4 so that the center frequency is 3.5789MHz and symmetrical.
(Refer to circuit 2/38)

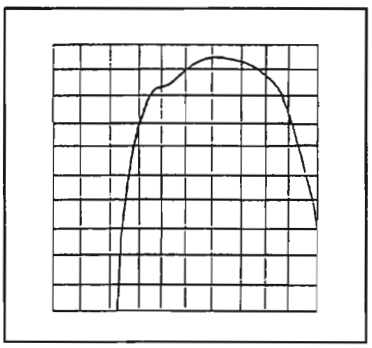

⑥ Connect 10MΩ probe to TP4. Set the external spectrum analyzer and the R3261/3361 spectrum analyzer as follows:

a) External spectrum analyzer
FREQ SPAN: 200kHz

b) R3261/3361

RBW: 10kHz

CPL	RBW	1	0	kHz

SPAN: 10MHz

SPAN	1	0	MHz

⑦ Adjust so that the peak of TP4 waveform is 3.5789MHz.

ADJ IF board (BLQ-015668) L12 (circuit 4/38)

FREQ ADJ

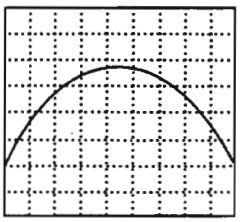

⑧ Connect 10MΩ probe to TP5, adjust so that the peak of TP5 waveform is 3.5789MHz.

ADJ IF board L14 (circuit 4/38)

FREQ ADJ

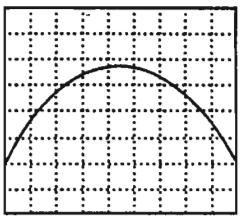

⑨ Connect 10MΩ probe to TP2. Set the spectrum analyzer as follows:

R3261/3361
RBW: 3kHz

CPL	RBW	3	kHz

⑩ Adjust so that peak of TP2 waveform is 3.5789MHz.

ADJ IF board L8 (circuit 3/38)

FREQ ADJ

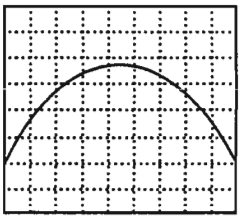

Also adjust so that the waveform is symmetrical.

ADJ IF board C8 (circuit 3/38)

SYMMETRI

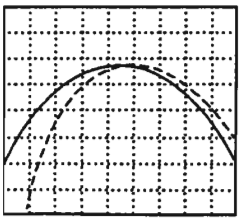

Repeat the adjustment several times till both are satisfied.

⑪ Connect the 10MΩ probe to TP3 and adjust so that peak of TP3 waveform is 3.5789MHz.

ADJ IF board L10 (circuit 3/38)

FREQ ADJ

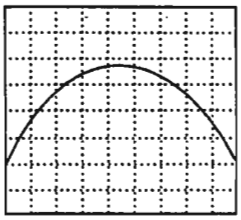

Also adjust so that the waveform is symmetrical.

ADJ IF board C20 (circuit 3/38)

SYMMETRI

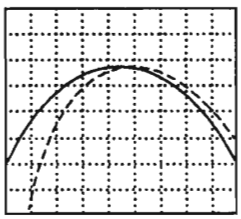

Repeat the adjustment several times till both are satisfied.

⑫ Connect the 10MΩ probe to TP2. Set the spectrum analyzer as follows:

R3261/3361
RBW: 30Hz

3	0	Hz

Adjust so that peak of TP2 waveform is 3.5789MHz.

ADJ IF board C10 (circuit 3/38)

FREQ ADJ

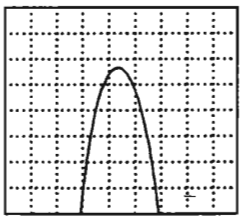

⑬ Connect the 10MΩ probe to TP3 and adjust so that peak of TP3 waveform is 3.5789MHz.

ADJ IF board C22 (circuit 3/38)

FREQ ADJ

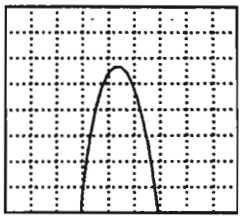

⑭ Connect the 10MΩ probe to TP7. Set the spectrum analyzer as follows:

R3261/3361
RBW: 10kHz

1	0	kHz

Adjust so that the peak of TP7 waveform is 3.5789MHz.

ADJ IF board L21 (circuit 10/38)

FREQ ADJ

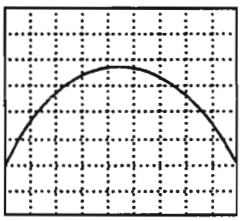

⑮ Connect 10MΩ probe to TP8 and adjust so that the peak of TP8 waveform is 3.5789MHz.

ADJ IF board L24 (circuit 10/38)

FREQ ADJ

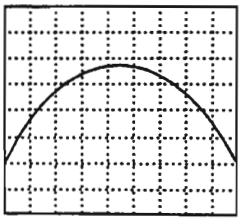

⑯ Connect 10MΩ probe to TP9. Set the spectrum analyzer as follows:

R3261/3361
RBW: 3kHz

3	kHz

⑰ Adjust so that the peak of TP9 waveform is 3.5789MHz.

ADJ IF board L26 (circuit 11/38)

FREQ ADJ

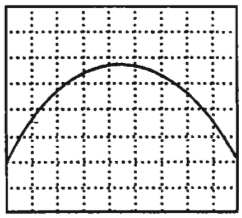

Also adjust so that the waveform is symmetrical.

ADJ IF board C124 (circuit 11/38)

SYMMETRI

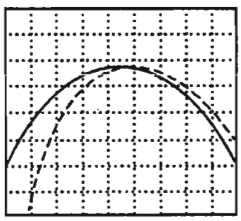

Repeat the adjustment several times till both are satisfied.

⑱ Connect 10MΩ probe to TP10 and adjust so that peak of TP10 waveform is 3.5789MHz.

ADJ IF board L29 (circuit 11/38)

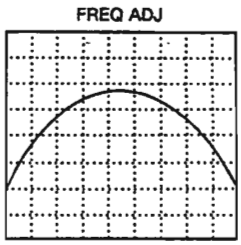

Also adjust so that the waveform is symmetrical.

ADJ IF board C136 (circuit 11/38)

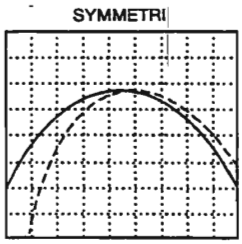

Repeat the adjustment several times till both are satisfied.

⑲ Connect the 10MΩ probe to TP9. Set the spectrum analyzer as follows:

R3261/3361
RBW: 30Hz

3	0	Hz

Adjust so that peak of TP9 waveform is 3.5789MHz.

ADJ IF board C122 (circuit 11/38)

FREQ ADJ

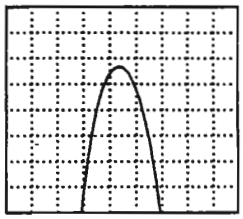

⑳ Connect the 10MΩ probe to TP10, and adjust so that peak of TP3 waveform is 3.5789MHz.

ADJ IF board C124 (circuit 11/38)

FREQ ADJ

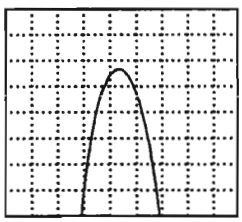

㉑ Remove the input cable connected to the external spectrum analyzer and then connect the J3 connector to the original position.

5.3.4 Resolution Band Width Switching Between Adjustment

- DESCRIPTION

  One IF filter in two IF filter group is adjusted with another spectrum analyzer with TG function. Another IF filter group is adjusted with the screen of R3261/3361. Each RBW of 10kHz, 3kHz and 30Hz is adjusted based on RBW of 300kHz.

- EQUIPMENT

External Spectrum Analyzer with TG ..	R3361A, C/B, D	
Impedance converter	R14602	
10MΩ Probe	P6133	
Cables	UM-BNC, 100cm long	MC-36A
Adapters	N (male) to BNC (female),	JUG-201 A/U

- CONNECTION

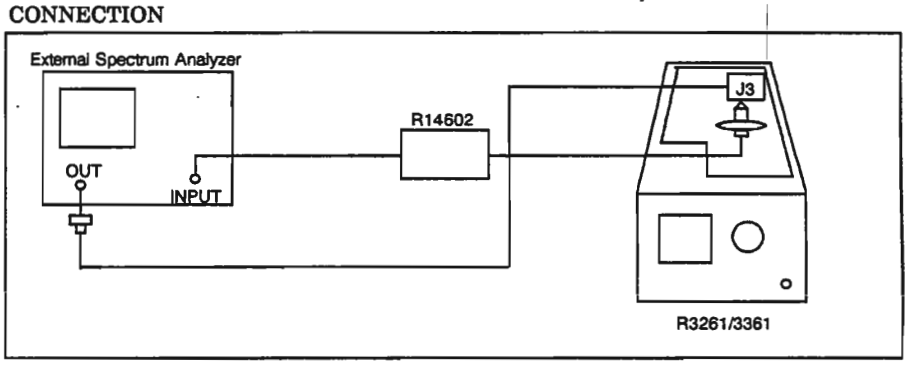

- ASSEMBLY ADJUSTMENT

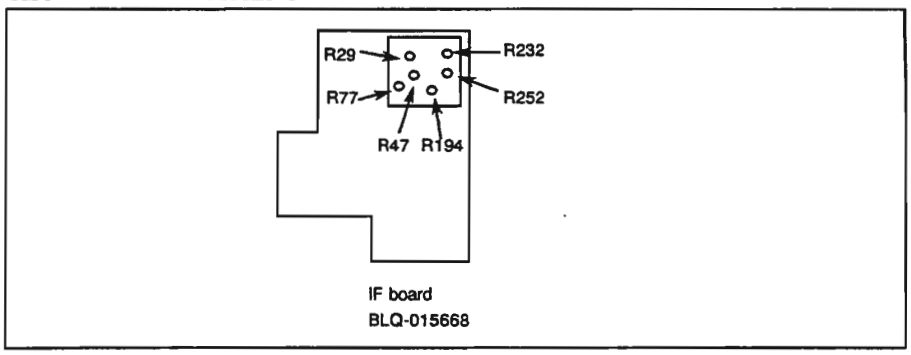

(1) IF-1

① Remove the upper cover of R3261/3361 and then remove the shield case of the IF board.

② Connect TG out of external spectrum analyzer to IF board (BLQ-015668) J3.

③ Connect the 10MΩ probe to input of the external spectrum analyzer passing the impedance converter, and set as follows:

CENTER FREQ:	3.5789MHz
TG LEVEL:	−20dBm
SPAN:	200kHz
RBW:	100kHz
dB/div:	0.1dB/div

④ Setting R3261/3361 (After pressing the [PRESET] key)

CAL CORRECTION: OFF

[SHIFT] [1] [CAL CORR ON/OFF]

RBW: 300kHz

[CPL] [RBW] [3] [0] [0] [kHz]

⑤ Connect the 10MΩ probe to IF board (BLQ-015668) TP5 and read the peak value of waveform.

⑥ Set the spectrum analyzer as follows:

R3261/3361
RBW: 10kHz

[1] [0] [kHz]

LEVEL ADJ

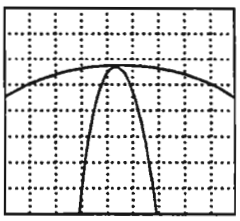

Adjust so that the peak level of the filter is the same as that of RBW at 300kHz above.

ADJ IF board(BLQ-015668) R77 (Refer to circuit 4/38)

⑦ Connect 10MΩ probe to TP5 and set the external spectrum analyzer and the spectrum analyzer as follows:

a) External spectrum analyzer

SPAN: 5kHz

b) R3261/3361

RBW: 3 kHz

3	kHz

Read the peak value of waveform.

⑧ Set the spectrum analyzer as follows:

R3261/3361

RBW: 30Hz

3	0	Hz

LEVEL ADJ

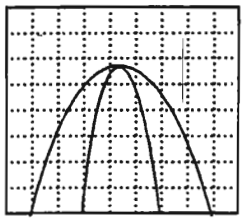

Adjust so that the peak level of the filter is the same as that of RBW at 3kHz above.

ADJ IF board R29 (circuit 3/38)

⑨ Set the external spectrum analyzer and the spectrum analyzer as follows:

a) External spectrum analyzer

SPAN: 100kHz

b) R3261/3361

RBW: 300kHz

3	0	0	kHz

Read the peak value of waveform.

⑩ Set the spectrum analyzer as follows:

R3261/3361
RBW: 3kHz

3	kHz

LEVEL ADJ

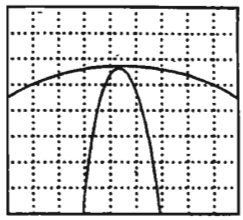

Adjust so that the peak level is the same as that of RBW at 300kHz above.

ADJ IF board R47 (circuit 3/38)

⑪ Remove the input cable connected to the external spectrum analyzer and then connect the J3 connector to the original position.

(2) IF-2

① Remove the upper cover of R3261/3361 and then remove the shield case of the IF board.

② Setting R3261/3361 (After pressing the [PRESET] key)

CENTER FREQ: 30MHz

[CENTER FREQ] [3] [0] [MHz]

SPAN: 200kHz

[SPAN] [2] [0] [0] [kHz]

RBW: 300kHz

[CPL] [RBW] [3] [0] [0] [kHz]

REF LEVEL: −19.5dBm

[REF LEVEL] [1] [9] [.] [5] [−dBm]

dB/div 0.1dB/

[dB/div] [↓] [↓] [↓] [↓] [↓] [↓]

CAL SIGNAL: ON

[SHIFT] [1] [CAL SIG ON/OFF]

CAL CORRECTION: OFF

[CAL CORR ON/OFF]

Read the peak level of waveform.

③ Set the spectrum analyzer as follows:

R3261/3361
RBW: 10kHz

CPL	RBW	1	0	kHz

SPAN: 20kHz

SPAN	2	0	kHz

Adjust so that the peak level of filter is the same as that of RBW at 300kHz above.

ADJ IF board R194 (circuit 10/38)

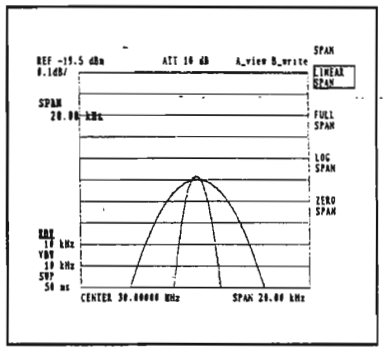

④ Set the spectrum analyzer as follows:

R3261/3361
RBW: 3kHz

CPL	RBW	3	kHz

SPAN: 5kHz

SPAN	5	kHz

Read the peak level of waveform.

⑤ Set the spectrum analyzer as follows:

R3261/3361
RBW: 30Hz

CPL	RBW	3	0	Hz

SPAN: 1kHz

SPAN	1	kHz

Adjust so that the peak level of filter is the same as that of RBW at 3kHz above.

ADJ IF board R232 (circuit 11/38)

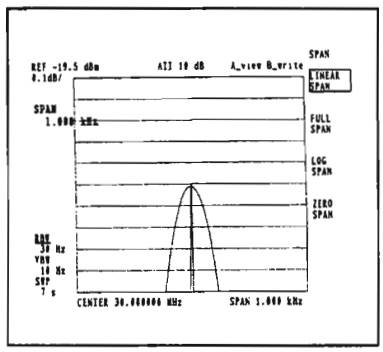

⑥ Set the spectrum analyzer as follows:

R3261/3361
RBW: 300kHz

CPL	RBW	3	0	0	kHz

SPAN: 200kHz

SPAN	2	0	0	kHz

Read the peak level of waveform.

⑦ Set the spectrum analyzer as follows:

R3261/3361
RBW: 3kHz

CPL	RBW	3	kHz

SPAN: 5kHz

SPAN	5	kHz

MAX ADJ

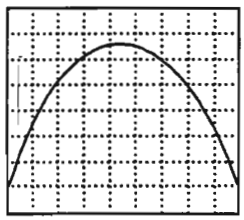

Adjust to maximize the peak of waveform filter.

ADJ IF board L30 (circuit 12/38)

⑧ Adjust so that the peak level of filter is the same as that of RBW at 300kHz above.

ADJ IF board R252 (circuit 11/38)

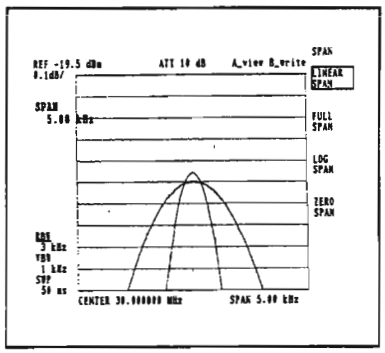

⑨ Reinstall the shield case and then reinstall the upper cover of R3261/3361.

5.3.5 LOG/LINEAR Amplifier Linearity Adjustment

- DESCRIPTION

  The LOG/LIN GAIN, OFFSET, MAG AMP, QP DET value can be adjust by changing the variable resistor values.

- EQUIPMENT

High stability SG	R4262		
10dB step ATT (0dB to 70dB)			
Power meter	HP436A		
Power sensor (3.5789MHz)	HP8481A		
Digital multimeter	TR6851		
Cables	BNC (male),	150cm long	MI-09
	UM-BNC,	100cm long	MC-36A
Adapters	N (male) to BNC (female),	JUG-201 A/U	(Three)

- CONNECTION

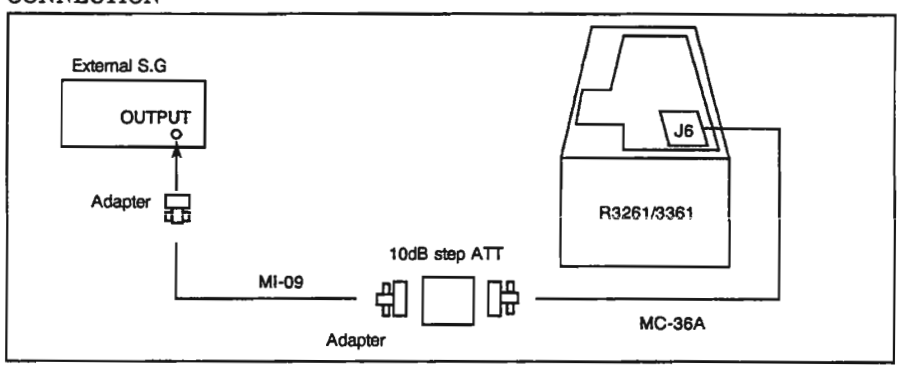

- ASSEMBLY ADJUSTMENT

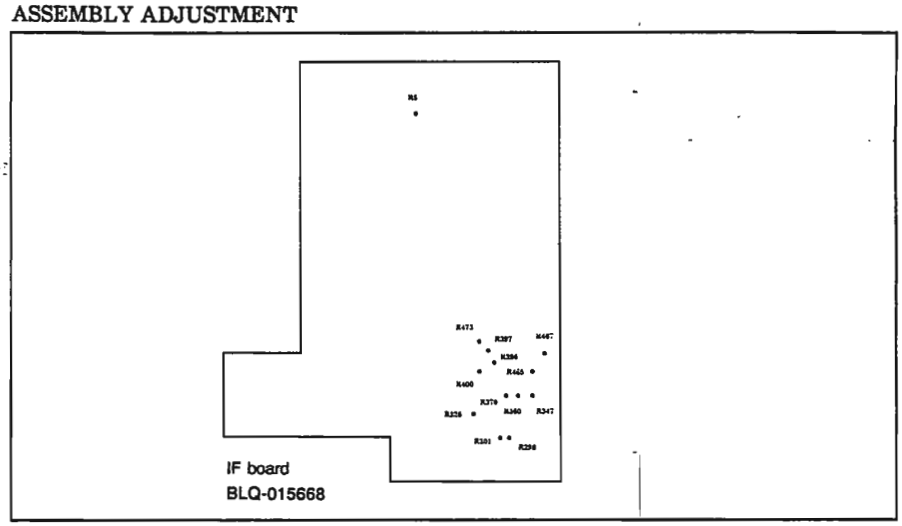

① Remove the top cover of the R3261/3361, and connect the signal generator as shown in the figure of CONNECTION.

Note: Before connecting, set the signal generator to 3.5789MHz, and calibrate with the power meter so that the signal generator inputs −1dBm into J6. (Set the 10dB step attenuator to 0dB.)

SG
f: 3.5789MHz
Po: −20dBm

② Setting R3261/3361: (**LINER MODE**) (After pressing the [PRESET] key)

SPAN: 0Hz
[SPAN] [ZERO SPAN]

CAL CORRECTION: OFF
[SHIFT] [1] [CAL CORR ON/OFF]

REF LEVEL: LINER
[REF] [LINER]

RBW: 3kHz
[CPL] [RBW] [3] [kHz]

③ Set the 10dB step attenuator to 80dB, and adjust the volume control until the voltage of TP11 becomes 0 to 1mV. (TP503 is grounded.)

ADJ IF board (BLQ-015668) R326

④ Set the 10dB step attenuator to 30dB, and measure the voltage of U54 5-pin with the digital multimeter (Data ①). Next, adjust the volume control until the voltage of TP12 becomes Data ① ±1mV.

ADJ IF board R465

⑤ Adjust the volume control until the voltage of U52 6-pin becomes 40.0 to 40.5mV.

ADJ IF board R473

⑥ Set the 10dB step attenuator to 0dB, and adjust the volume control until the voltage of TP11 becomes 4V ±3mV.

ADJ IF board R298

⑦ Setting the R3261/3361: (**LOG MODE**)

REF LEVEL: LOG

[REF] [Log/div]

⑧ Set the 10dB step attenuator to 0dB, and adjust the volume control until the voltage of JP2 becomes 4V ±3mV.

ADJ IF board R301

⑨ Set the 10dB step attenuator to 70dB, and adjust the volume control until the voltage of JP2 becomes 0.5V ±3mV.

ADJ IF board R347

⑩ Repeat steps ⑧ and ⑨ until the conditions therein are satisfied.

⑪ Set the 10dB step attenuator to 0dB. (dB/div ADJ)

⑫ Change the scale unit to 1dB/div, and adjust the volume control until the voltage of JP2 becomes 4V ±3mV.

1dB/div

[REF] [dB/div] [↓] [↓] [↓]

ADJ IF board R360

⑬ Change the scale unit to 10dB/div, and adjust the volume control until the voltage of JP2 becomes 4V ±3mV.

10dB/div

REF | dB/div | ↑ | ↑ | ↑

ADJ IF board R370

⑭ Repeat steps ⑫ and ⑬ until the conditions therein are satisfied.

⑮ Setting the R3261/3361: (**QP MODE ADJ**)

QP: ON

SHIFT | 4 | QP ON/OFF

⑯ Set the 10dB step attenuator to 0dB, and adjust the volume control until the voltage of JP2 becomes 4V ±3mV.

ADJ IF board R397

⑰ Set the 10dB step attenuator to 30dB, and adjust the volume control until the voltage of JP2 becomes 2.48V ±10mV.

ADJ IF board R400

⑱ Repeat steps ⑯ and ⑰ until the conditions therein are satisfied.

⑲ Disconnect the input cable from J6, and reestablish the connection in its former state. Set the signal output level from the signal generator to −5dBm, and connect the input cable to J3 on the IF board. Set the 10dB step attenuator to 0dB.

SG setting
Po: −5dBm

⑳ See that the R3261/3361 outputs the marker onto the scale, and adjust the signal output level from the signal generator until the marker level becomes 0dBm.

Marker: ON

㉑ Set the 10dB step attenuator to 40dB, and adjust the volume control until the marker indicates −40dBm ±0.5dB.

ADJ IF board R467

㉒ Set the 10dB step attenuator to 70dB, and adjust the volume control until the marker indicates −40dBm ±0.5dB.

ADJ IF board R467

㉓ Repeat steps ㉑ and ㉒ until the conditions therein are satisfied.

㉔ Setting R3261/3361: (**IF GAIN ADJ**) (After pressing the [PRESET] key)

SPAN: 0Hz

[SPAN] [ZERO SPAN]

CAL CORRECTION: OFF

[SHIFT] [1] [CAL CORR ON/OFF]

RBW: 300kHz

[CPL] [RBW] [3] [0] [0] [kHz]

Marker: [ON]

dB/div: 1dB/div

[REF] [dB/div] [↓] [↓] [↓]

㉕ Calibrate the signal level so that a −5dBm signal is input from the signal generator into J3. Input the signal from the signal generator into J3 again.

㉖ Adjust the volume control until the marker level becomes 0dBm ±0.5dB.

ADJ IF board R5

㉗ Disconnect the input cable from J3, and reestablish the connection in its former state.

5.3.6 Reference Level Adjustment

(1) STEP AMP

- DESCRIPTION

The IF step amp consists of five amps: one that can be changed between 10dB and 20dB, and four 20dB amps. The gain of these amps can be adjusted using the volume control. For adjustment, the reference signal and a signal differing from the reference signal by 10dB or 20dB are used. The difference between these two signal levels must have first been calibrated.

- EQUIPMENT

High stability SG R4262
10dB step ATT (0dB to 70dB)
Cables ..... SMA, 70cm long A01002
Adapters ..... N (male) to SMA (female), HRM-554S (Four)

Use the adapter assembly of the impedance 75Ω for N type R3261/3361.

- CONNECTION

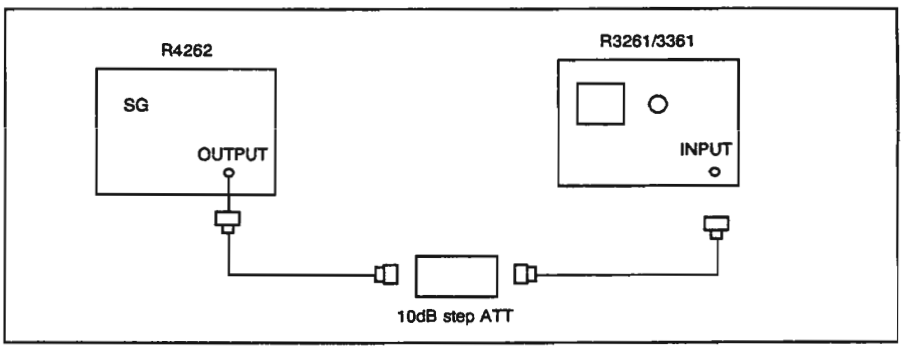

- ASSEMBLY ADJUSTMENT

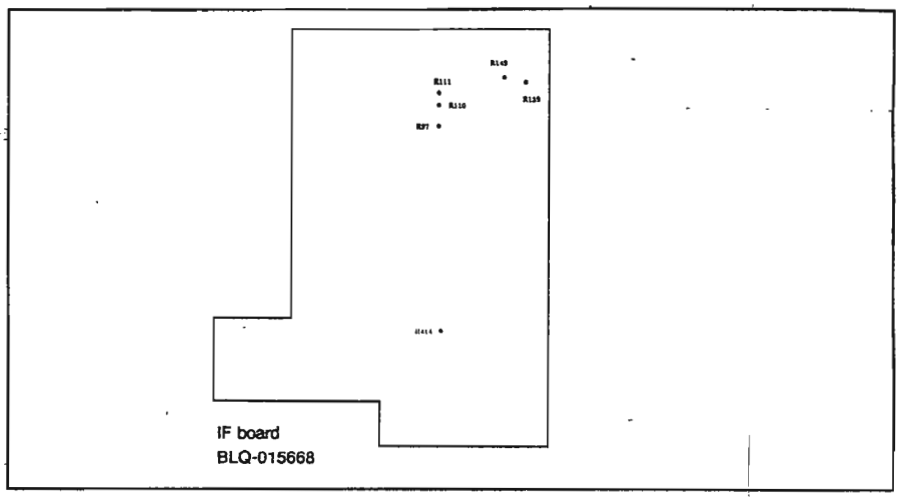

① Remove the top cover of the R3261/3361, and connect the signal generator as shown in the figure of CONNECTION.

② Turn on the power, and allow a warmup period of at least 30 minutes.

③ Setting R3261/3361 (After pressing the [PRESET] key)

CAL CORRECTION: OFF

[SHIFT] [1] [CAL CORR OFF]

CENT FREQ: 30MHz

[CENT FREQ] [3] [0] [MHz]

SPAN: 50kHz

[SPAN] [5] [0] [kHz]

RBW: 3kHz

[CPL] [3] [kHz]

dB/div: 0.2dB

[REF] [dB/div] [↓] [↓] [↓] [↓] [↓]

Marker: PEAK SEARCH (CONT)

[PEAK] [NEXT MENU] [PEAK CONT ON/OFF]

④ SG Setting

f: 30MHz

Po: −1dBm

⑤ Adjust the marker value of R3261/3361 by changing the signal level of SG for −1dBm.

⑥ Set the 10dB step attenuator and the reference level to 10dB and −10dBm, respectively. Adjust the volume control until the marker level becomes −11dBm ± 0.05dB.

REF LEVEL: −10dBm

[REF] [↓]

ADJ IF board R111

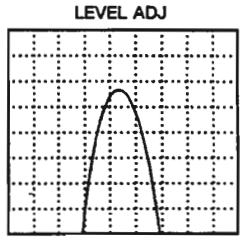

⑦ Change the reference level and the setting of the 10dB step attenuator as shown in the table, and adjust the volume control in the same manner as ⑥ above.

REF [↓] 10dB down

[↑] 10dB up

REF LEVEL	10dB step ATT	VR for ADJ	ADJ Spec
−10dBm	10dB	R 111	−11dBm ± 0.03dB
−20dBm	20dB	R 97	−21dBm ± 0.03dB
−40dBm	40dB	R 110	−41dBm ± 0.03dB
−50dBm	50dB	R 149	−51dBm ± 0.03dB
−70dBm※	70dB	R 159	−71dBm ± 0.03dB

※ REF LEVEL −70dBm setting

[SHIFT] [BS]

[1] [REF] [0] [0] [0] [6] [Hz]

[1] [5] [Hz] [RETURN]

⑧ 120dB display adjustment

REF	0	+dBm

8div/12div

10dB step ATT 0dB

Adjust until the signal output level from the signal generator becomes 0dBm on the R3261/3361.

⑨ Set the 10dB step attenuator to 60dB, and adjust until the marker level becomes −60dBm ±1.6dB.

ADJ IF board R414

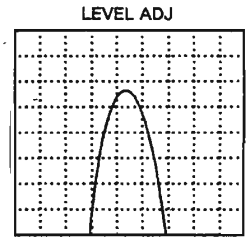

(2) RF Total Gain Adjustment

- DESCRIPTION

  RF Total Gain of R3261/3361 and internal Calibration signal are adjusted, using the external signals of 30MHz and −20dBm from the signal generator as a reference.

- EQUIPMENT

High stability SG	R4262		
Power meter	HP436A		
Power sensor	HP8481A		
Cables	SMA,	70cm long	A01002
Adapters	N (male) to SMA (female),		HRM-554S (TWO)

Use the adapter assembly of the impedance 75Ω for N type R3261/3361.

- CONNECTION

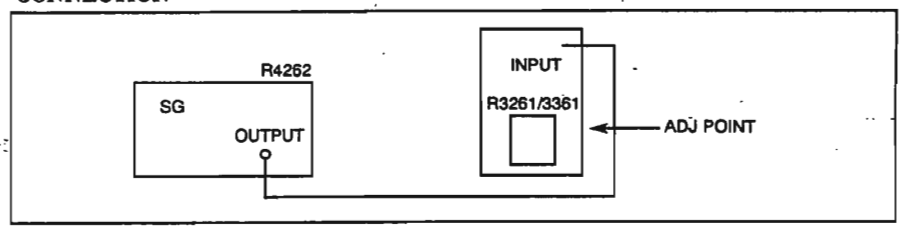

- ASSEMBLY ADJUSTMENT

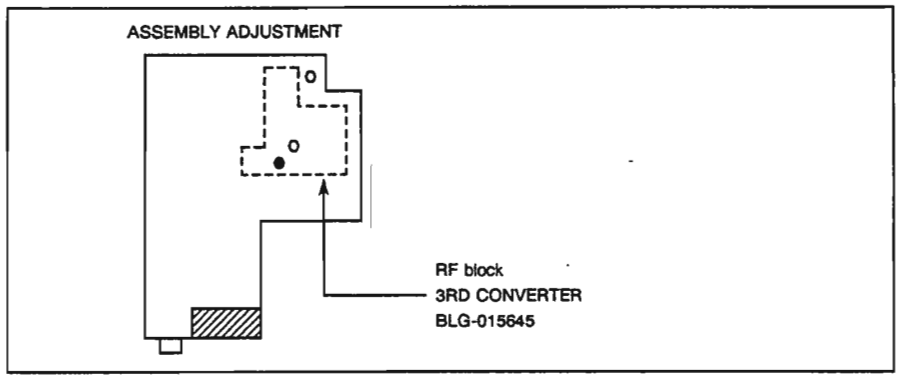

① Remove the bottom cover of the R3261/3361, and input the following signals from the signal generator (after first calibrating them with the power meter).

SG
f: 30MHz
Po: −20dBm

② Setting R3261/3361 (After pressing the [PRESET] key)

CENT FREQ: 30MHz

[CENT FREQ] [3] [0] [MHz]

SPAN: 500kHz

[SPAN] [5] [0] [0] [kHz]

RBW: 300kHz

[CPL] [RBW] [3] [0] [0] [kHz]

REF LEVEL: −15dBm

[REF] [1] [5] [−dBm]

dB/div: 1dB/div

[dB/div] [↓] [↓] [↓]

CAL CORRECTION: OFF

[REF] [1] [CAL CORR ON/OFF]

MARKER: PEAK SEARCH (CONT)

[PEAK] [NEXT MENU] [PEAK CONT ON/OFF]

③ Adjust the volume control until the marker level becomes −20dBm ±0.1dB.

ADJ 3RD CONV R28

LEVEL ADJ

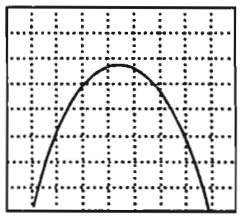

④ Calibration Amp Adjustment

Disconnect the input cable from the signal generator, calibrate the following signals with the power meter, and input them to the R3261/3361 again.

SG
f: 30MHz
Po: −30dBm

Uncover the shield case of the calibration amp block.

⑤ Setting the R3261/3361:

REF LEVEL: −25dBm

[REF] [↓]

Measure the signal level from the signal generator with the marker. (Data ①)

⑥ Turn the calibration amp on, and set the calibration signal level to −30dBm. Then adjust the volume control until the marker level becomes Data ① ±0.05dBm.

[SHIFT] [1] [CAL STG ON/OFF] [3] [0] [−dBm]

ADJ CAL AMP R18

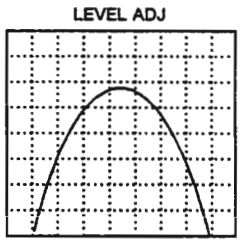

⑦ Set the calibration signal level to −20dBm, and adjust the volume control until the marker level becomes 20dBm ±0.05dB.

[2] [0] [−dBm]

ADJ CAL AMP R16

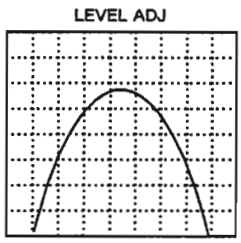

⑧ Put the bottom cover of the R3261/3361 back in place.

5.3.7 TG Output Level Accuracy

- DESCRIPTION

  Set the TG output level to 30MHz, measure the output with the power meter, and adjust the measurement using the volume control.

- EQUIPMENT

  Power meter ..... HP 436A
  Power sensor ..... HP 8481A

  Use the adapter assembly of the impedance 75Ω for N type R3261/3361.

- CONNECTION

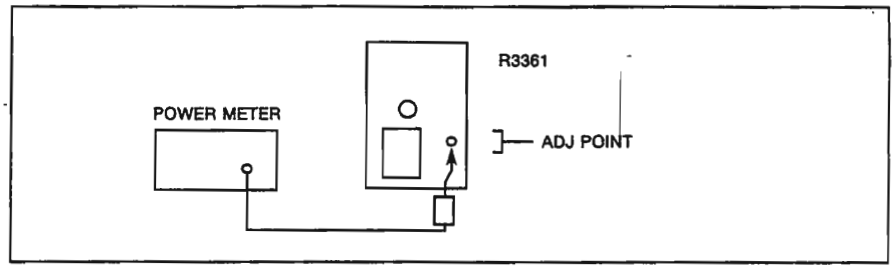

- ASSEMBLY ADJUSTMENT

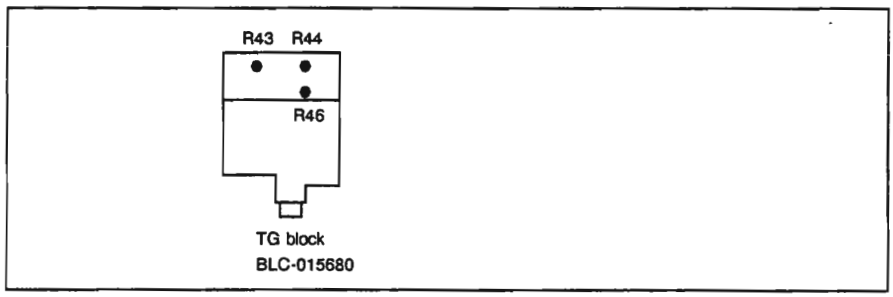

① Setting R3261/3361 (After pressing the PRESET key)

CENT FREQ: 30MHz

CENT FREQ | 3 | 0 | MHz

SPAN: 0Hz

SPAN | ZERO SPAN

TG: ON

TG

CAL CORRECTION: OFF

SHIFT | 1 | CAL CORR ON/OFF

② Remove the bottom cover of the R3261/3361, and connect the power meter as shown in the figure of CONNECTION.

③ Adjust the two volume controls so that the variable range on the power meter becomes 4dB ±0.1dB when the output level of the TG block is changed from −14dBm to −10dBm.

LEVEL

ADJ ALC CONT (BLC-015680) R43, R46

④ Set the output level of the TG block to −10dBm, and adjust with the volume control until the power meter reads −10dBm ± −0.1dB.

TG LEVEL: −10dBm

1 | 0 | − dBm

ADJ ALC CONT R44

6. MAINTENANCE (TROUBLESHOOTING)

6.1 Level Down

Event : Level is low when CAL signal is displayed.
Level is low when external signal is input.

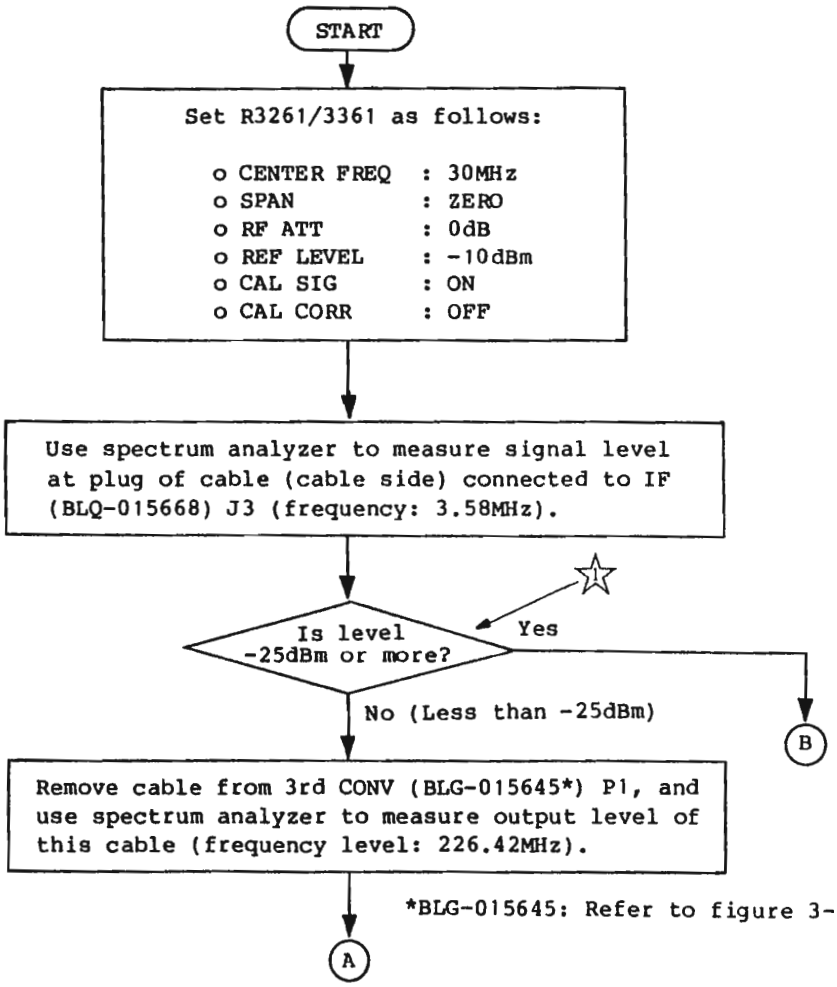

*BLG-015645: Refer to figure 3-23.

☆

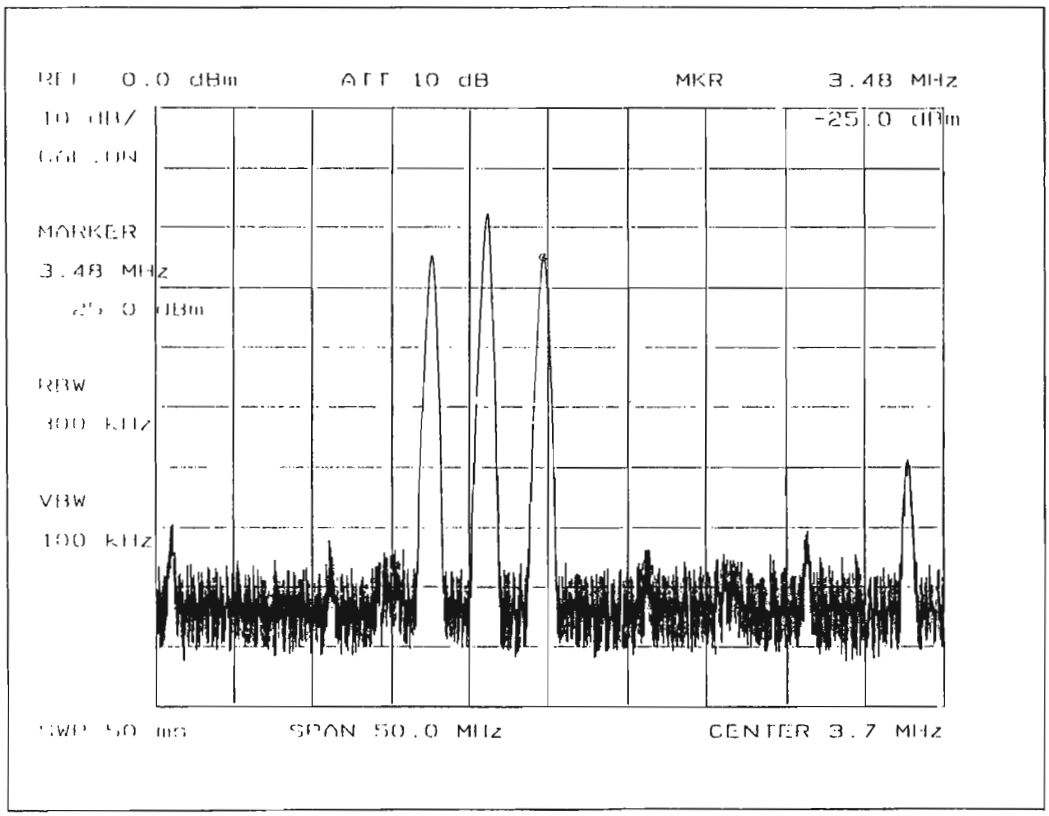
REF 0.0 dBm
ATT 10 dB
MKR 3.48 MHz
-25.0 dBm
MARKER
3.48 MHz
RBW
VBW
100 kHz
SPAN 50.0 MHz
CENTER 3.7 MHz

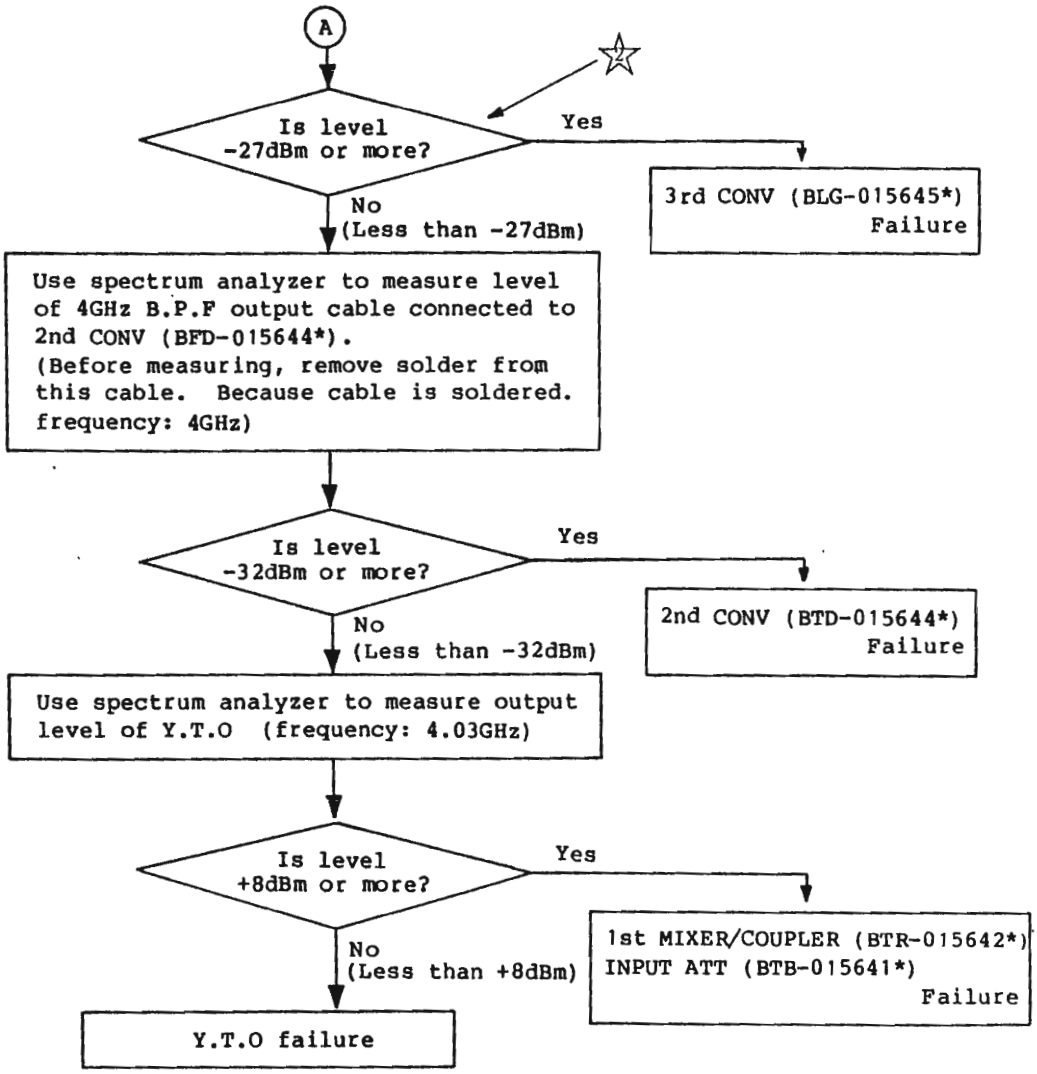

*BFD-015644, BLG-015645, BTR-015642, BTB-015641:
Refer to figure 3-23.

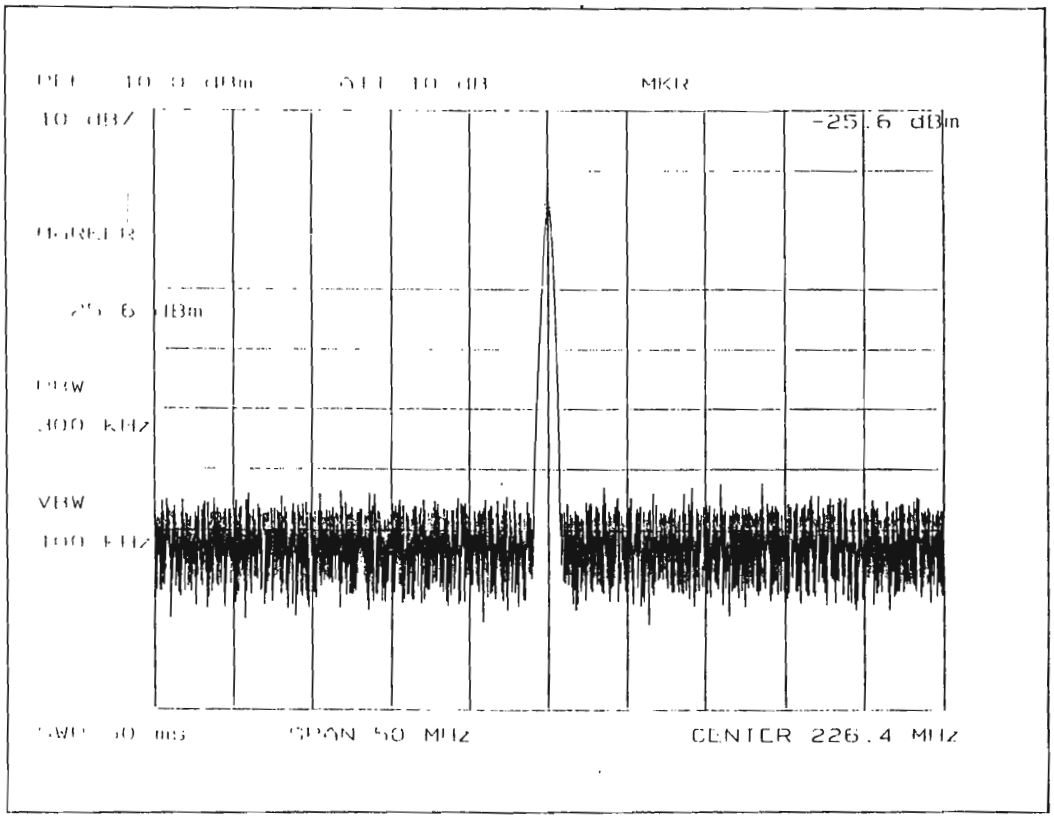
MKR
-25.6 dBm
10 dB/
MARKER
25.6 dBm
RBW
300 kHz
VBW
100 kHz
SWP 50 ms
SPAN 50 MHz
CENTER 226.4 MHz

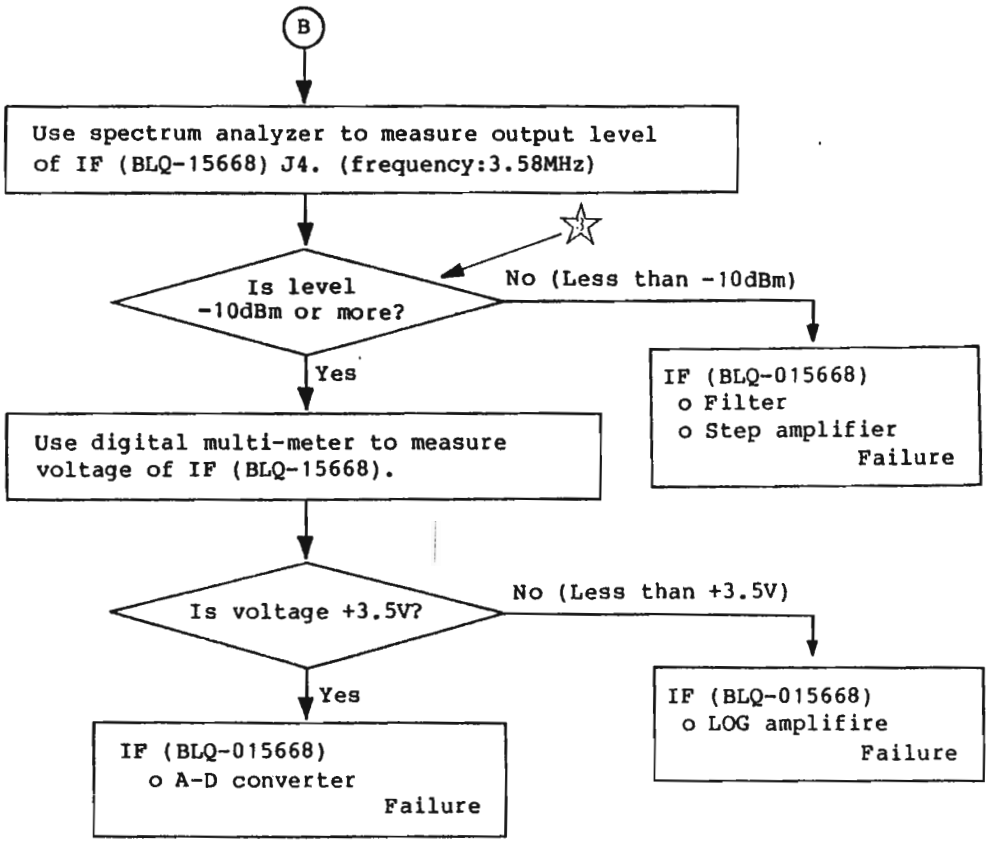
B
Use spectrum analyzer to measure output level of IF (BLQ-15668) J4. (frequency:3.58MHz)
Is level -10dBm or more?
No (Less than -10dBm)
IF (BLQ-015668)
o Filter
o Step amplifier
Failure
Yes
Use digital multi-meter to measure voltage of IF (BLQ-15668).
Is voltage +3.5V?
No (Less than +3.5V)
IF (BLQ-015668)
o LOG amplifire
Failure
Yes
IF (BLQ-015668)
o A-D converter
Failure

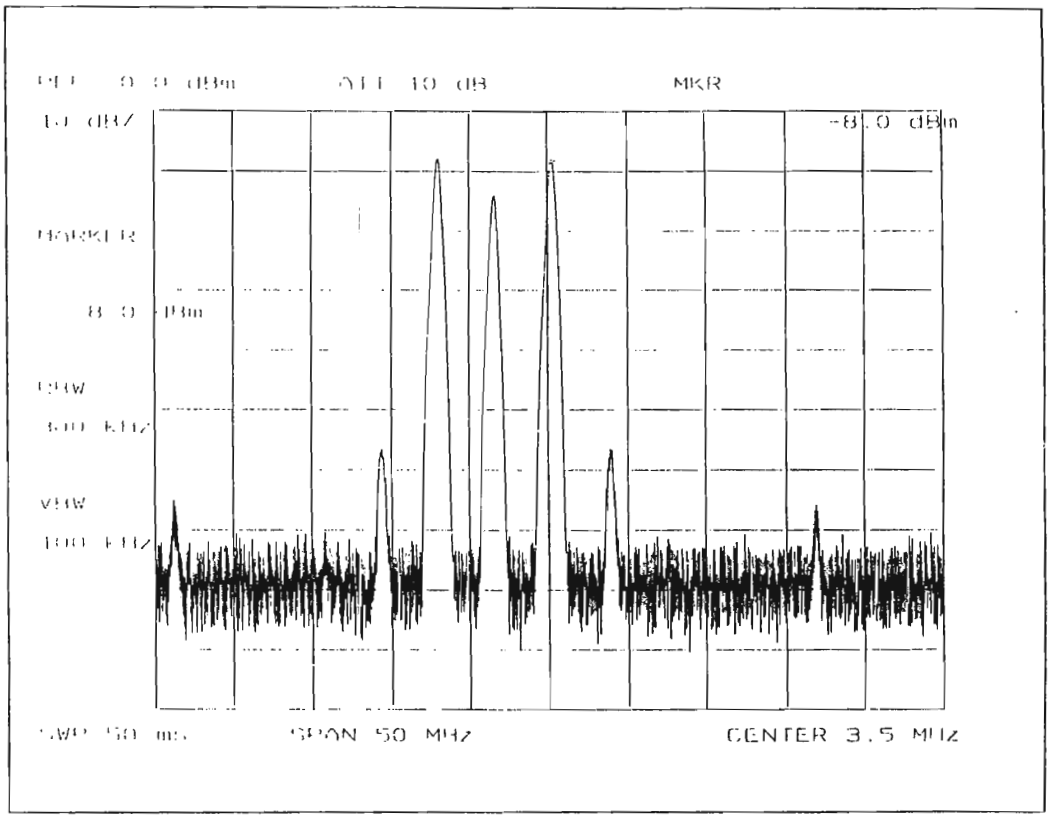
ATT 10 dB
MKR
-8.0 dBm
MARKER
8.0 dBm
VBW
SPAN 50 MHz
CENTER 3.5 MHz

6.2 Unlock

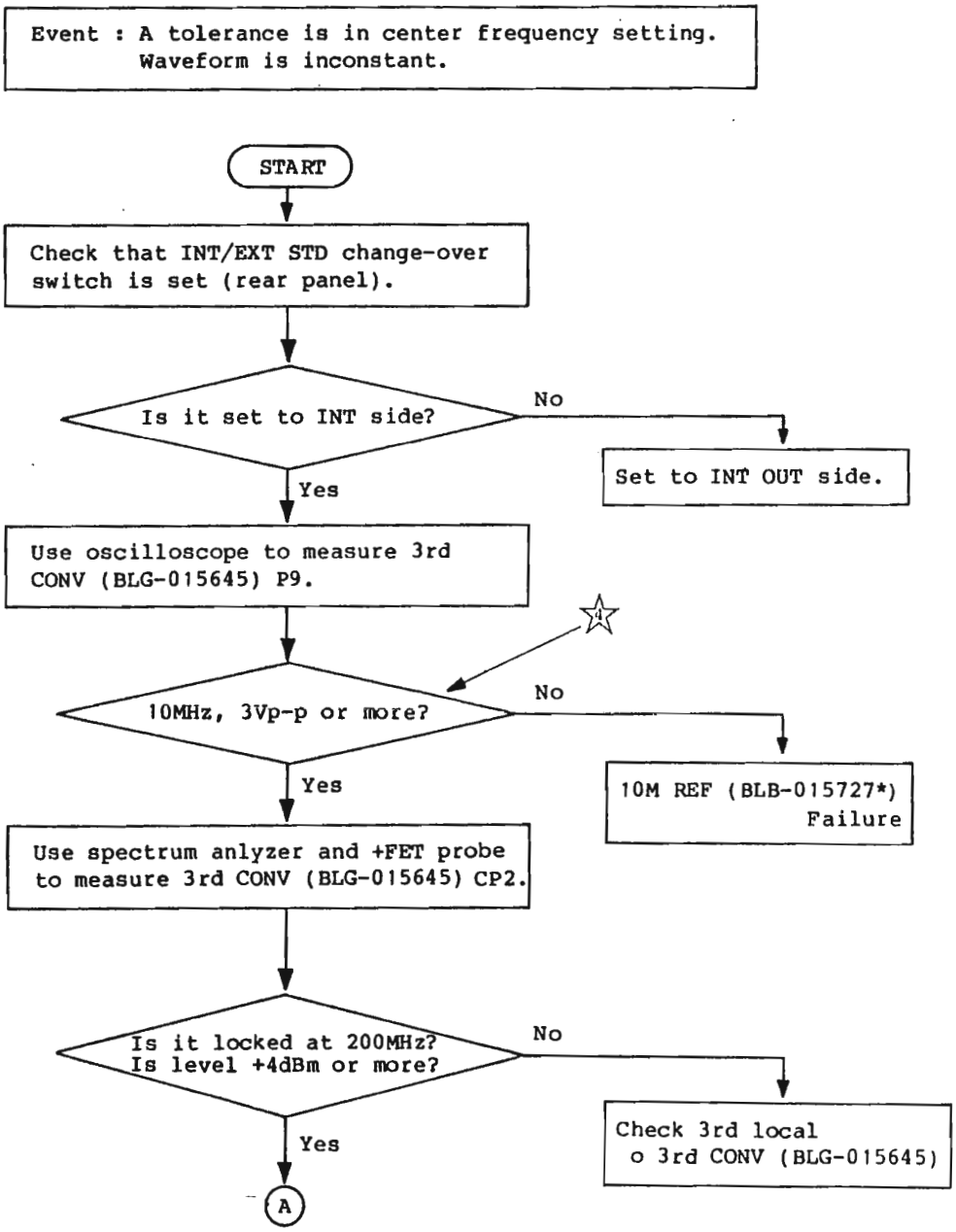

*BLB-015727: Refer to figure 3-23.

☆

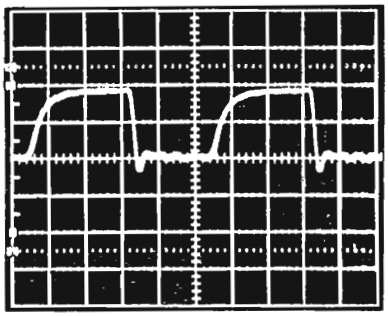

2V/Div

0.02µs/Div

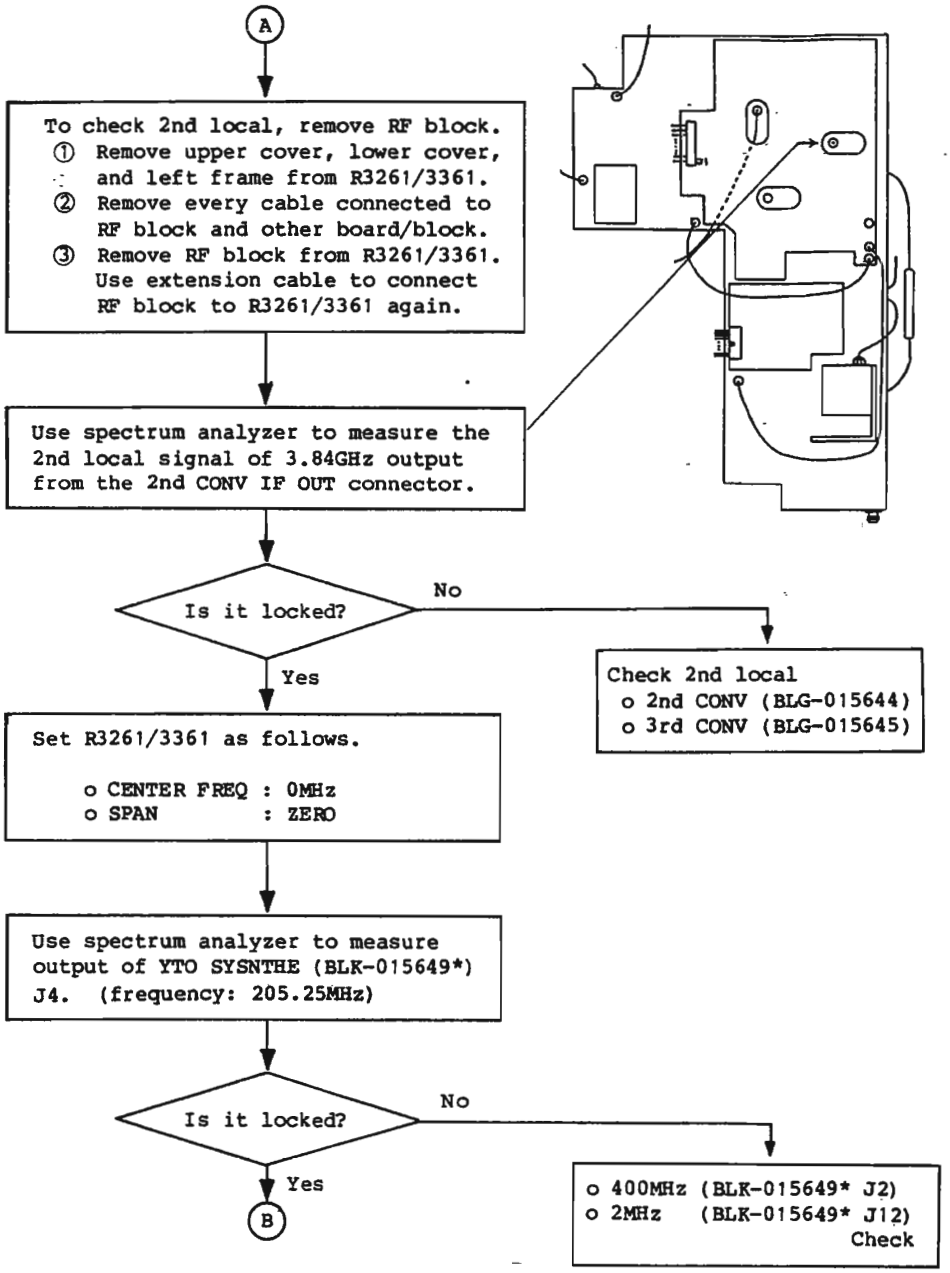

*BLK-015649: Refer to figure 3-23.

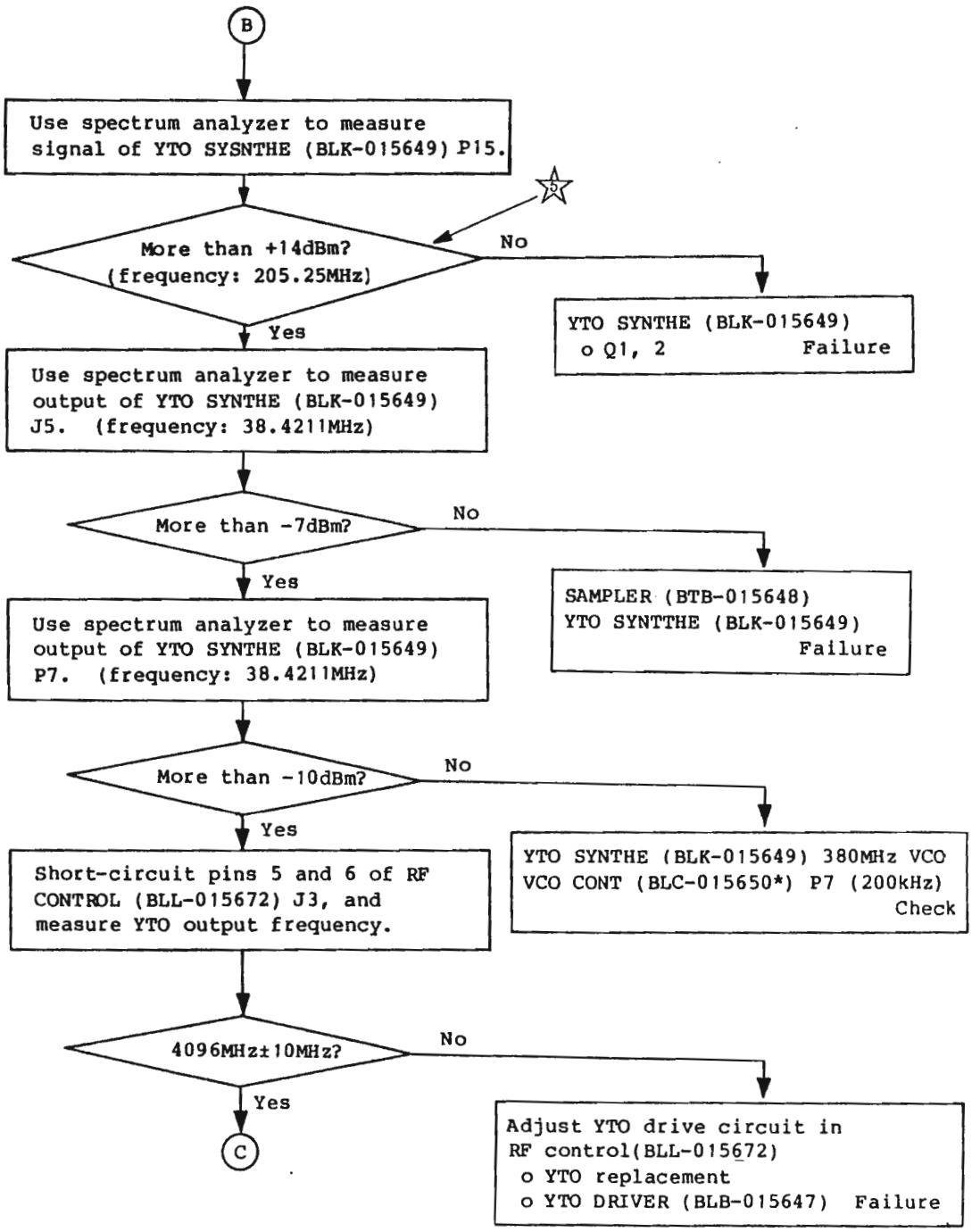

*BLC-015650: Refer to figure 3-23.

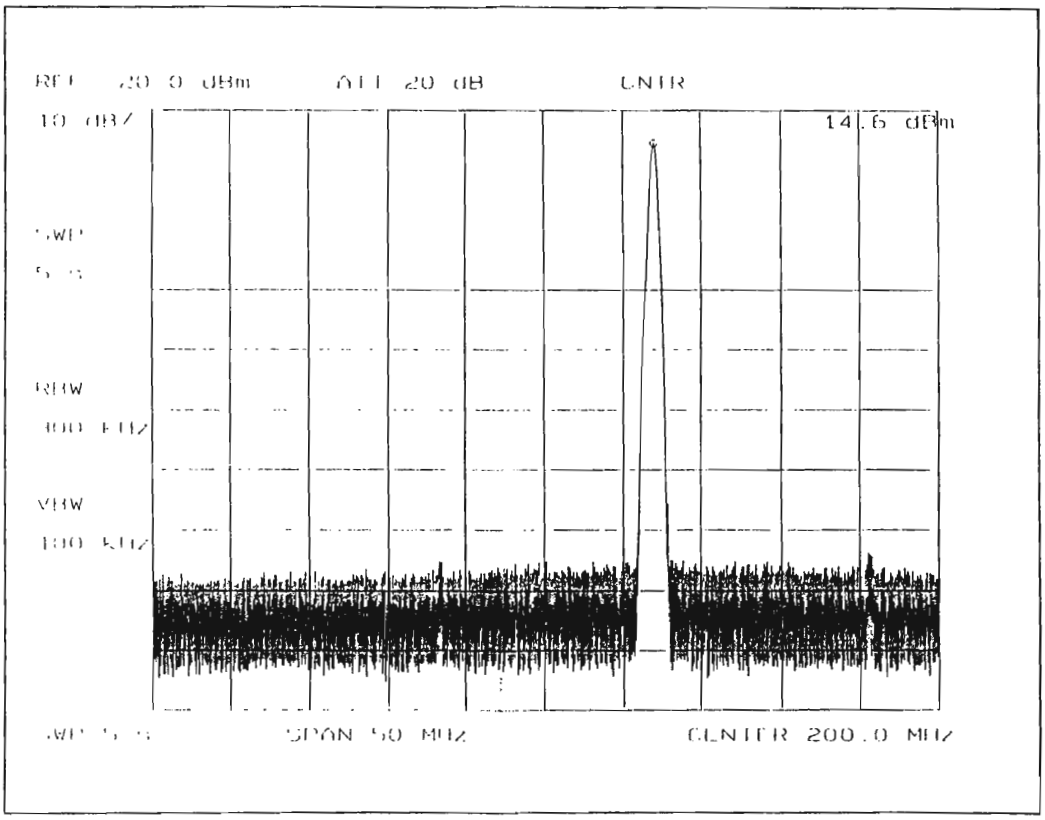
ATT 20 dB
CNTR
14.6 dBm
10 dB/
RBW
VBW
SPAN 50 MHz
CENTER 200.0 MHz

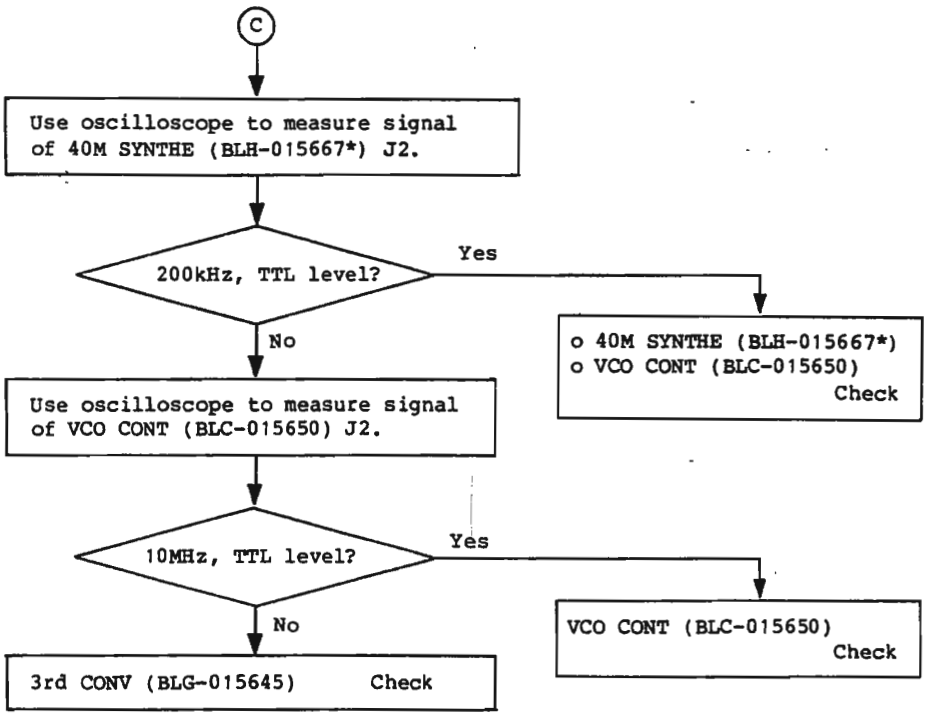

*BLH-015667: Refer to figure 3-23.

6.3 TG Failure

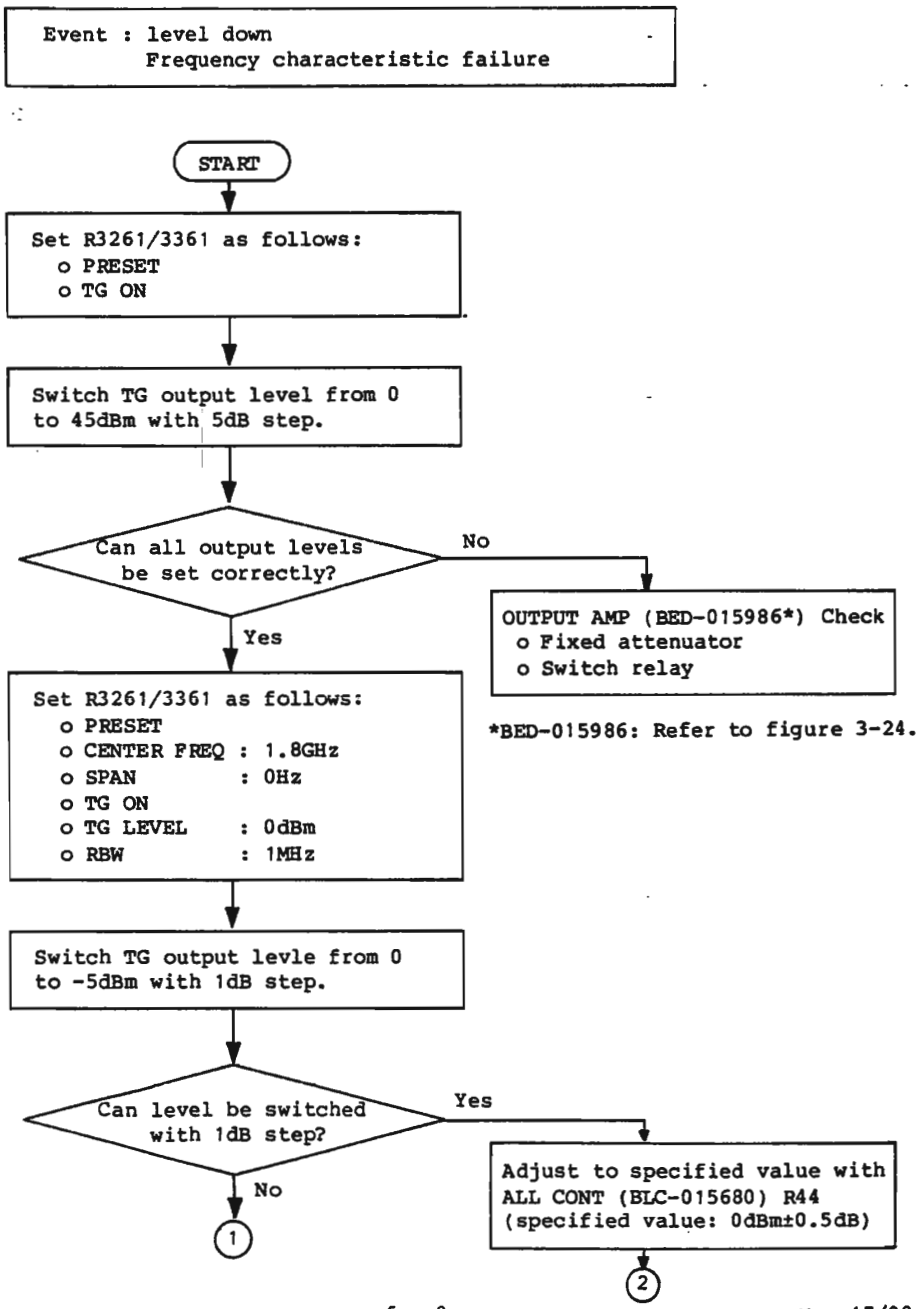

(1)

Measure emitter voltage of ALC CONT (BLC-015680) Q2

Output level [dBm]	Voltage [V]
0	-3.069
-1	-3.013
-2	-2.962
-3	-2.918
-4	-2.894
-5	-3.069

Normal?

- No → ALC CONT (BLC-015680) Check
- Yes ↓

Remove semi-rigid cable from TG block, and measure signal using spectrum analyzer.
(frequency: 4.066GHz)
R3261/3361 setting
CENTER FREQ : 0MHz
SPAN : 0MHz

Is level more than -7dBm (at 4 to 7.6GHz)?

- No →
  - o YTO
  - o COUPLER OUTPUT (BTB-015118)

  Check
- Yes ↓

Connect ALC signal line to GND (chassis).

(3)

(2)

Adjustable?

- Yes → Adjustment
- No →
  - o OUTPUT AMP (BED-015986) C25
  - o TG OUTPUT connector

  Check

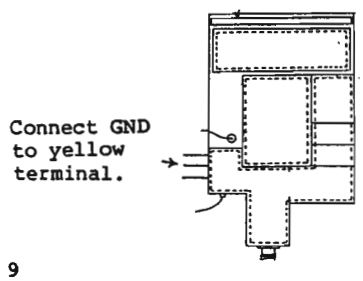

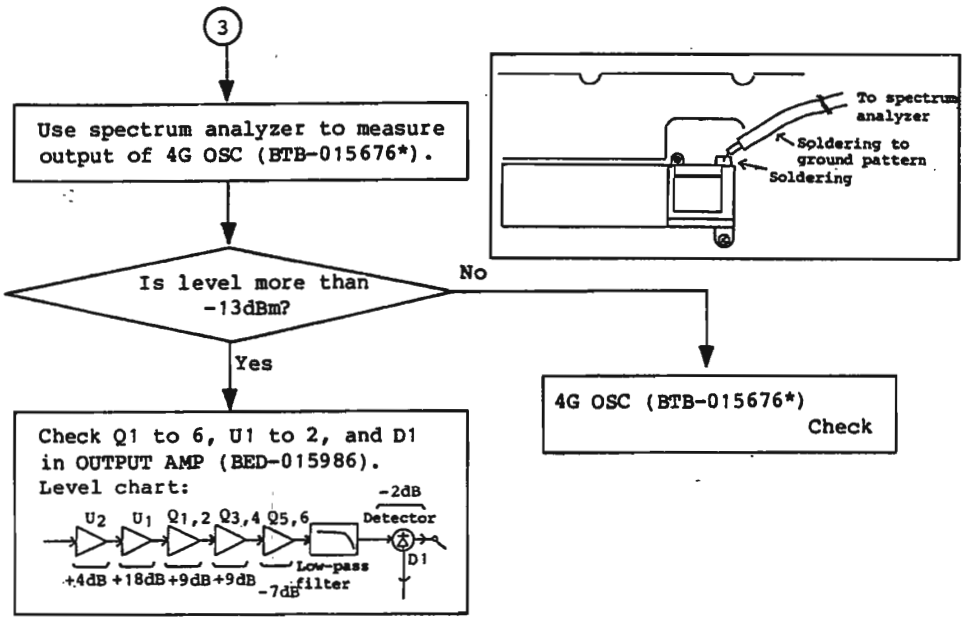

*BTB-015676: Refer to figure 3-24.

6.4 Power Supply

Replace the power supply unit if does not work correctly.

Procedure

① Replace the power supply unit. (See Figure 6-3.)

② Check that the voltage check points (+15V, -15V, +5.2V and +12V) shown in Figure 6-1 are within the following tolerances:

+15V --- ±5%
-15V --- ±5%
+5.2V --- ±3%
+12V --- ±5%

③ Make the adjustments described in 5.4.1 "Frequency Span".

④ Make the adjustments described in 5.4.5 "LOG/LINEAR Amplifier Linearity".

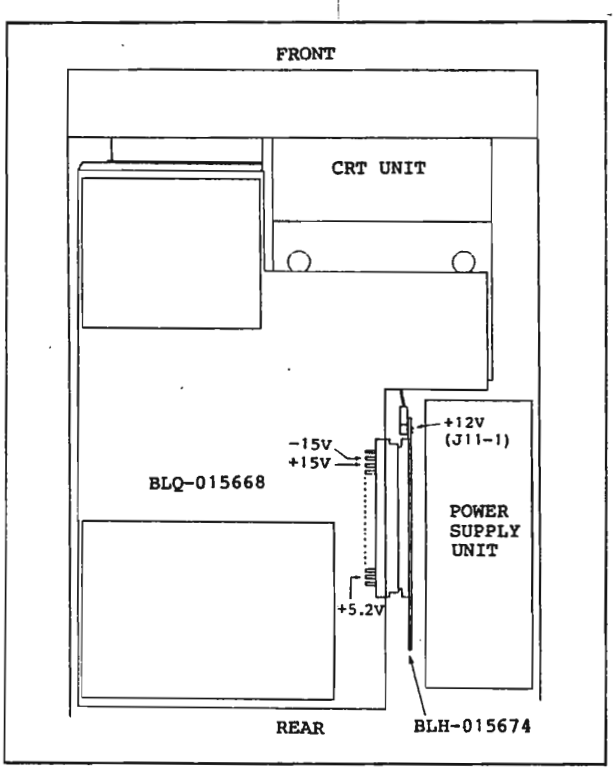

Figure 6-1 Voltage Check Points

6.5 CRT Unit

Replace the CRT unit if it does not work correctly.

Procedure

① Replace the CRT unit. (See Figure 6-3.)

② Set the intensity to the maximum value with INTENSITY.

③ Adjust the intensity with "SUB BRIGHT" (See Figure 6-2.) so that the back raster appears faintly.

④ Adjust "CONTRAST" to strengthen the contrast (See Figure 6-2.) as far as the pattern is not distorted remarkably and can be focused.

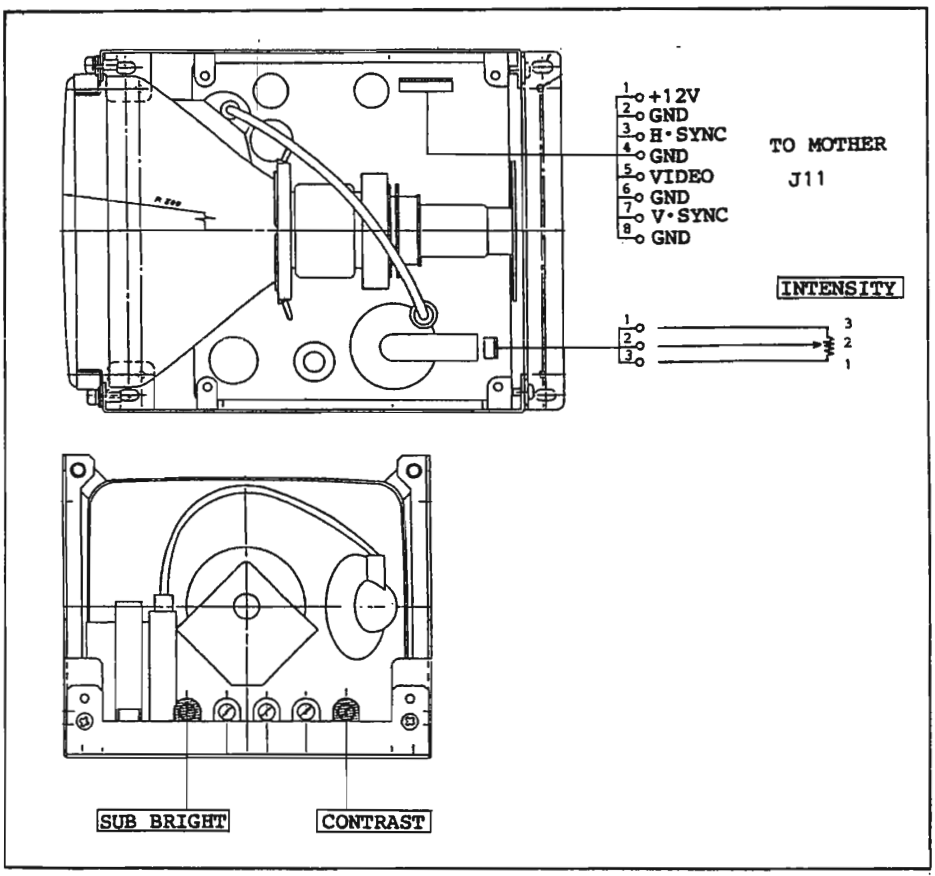

Figure 6-2 Fine Adjustment of The CRT Unit

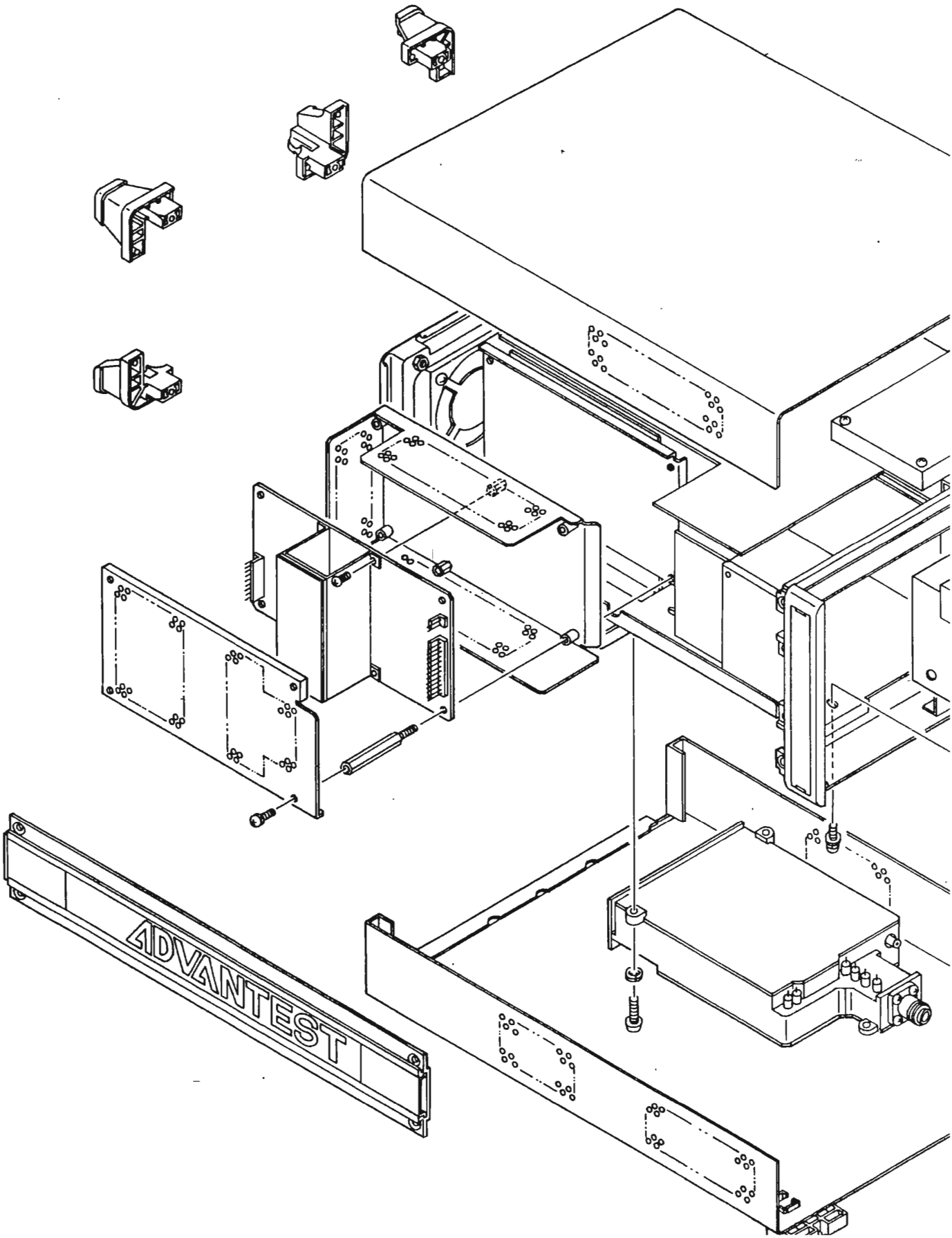
ADVANTEST

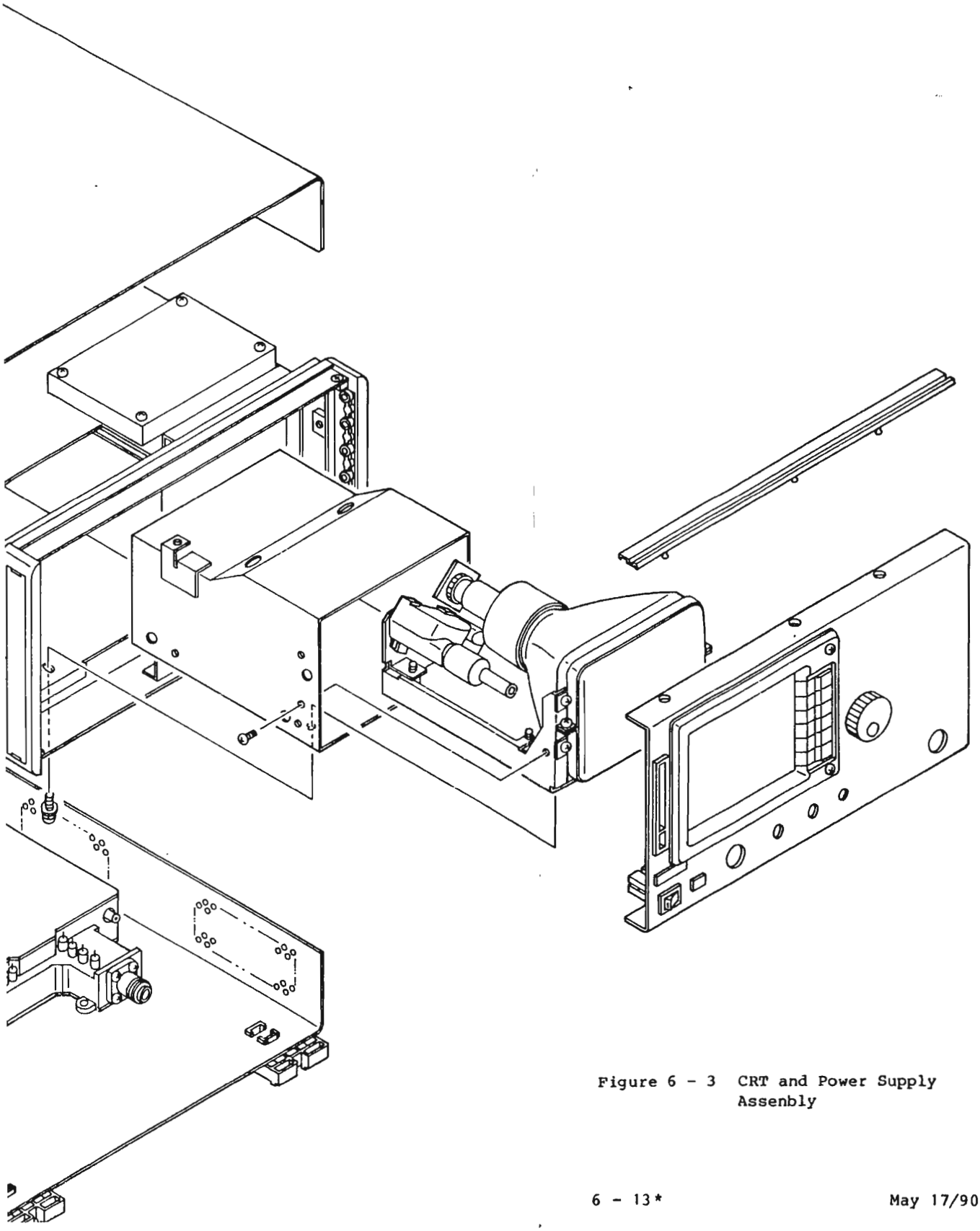

Figure 6 - 3 CRT and Power Supply Assenbly

7. REPLACEABLE ELECTRICAL PARTS, CIRCUIT DIAGRAMS AND LOCATION

Table 7-1 Contents for Chapter 7

	BOARD NAME	PCB ASSEMBLY	PARTS LIST	CIRCUIT LAYOUT	PARTS LOCATION	CIRCUIT DIAGRAM
	IC CARD	BGC-015745	7-2	-	7-3	7-4 to 7-5
	CONTROL	BLQ-015670	7-7 to 7-8	-	7-9	7-10 to 7-26
	RF CONTROL	BLL-015672	7-27 to 7-30	7-31	7-32	7-33 to 7-34
	IF SECTION	BLQ-015668	7-35 to 7-54	7-55	7-56	7-57 to 7-94
	CPU	BLQ-015669	7-95 to 7-98	-	7-99	7-100 to 7-132
	TG KEY	BLB-015775	7-133	-	-	7-135
	KEY	BLG-015673	7-137	-	7-139	7-140 to 7-141
RF	RF BLOCK	WBL-3261RF	7-143	7-145	7-146	7-149
		WBL-3361RF	7-144	7-147	7-148	
	CAL AMP	BLB-015646	7-151	7-145	7-146	7-153
	YTO DRIVER	BLB-015647	7-155 to 7-156	7-157	7-158	7-159 to 7-160
	10MHz REF.	BLB-015727	7-161	7-147	7-148	7-163
	SAMPLER	BTB-016118	7-165	7-145	7-146	7-167 to 7-168
	VCO CONT	BLC-015650	7-169 to 7-170	7-145	7-146	7-171
	3RD CONV	BLG-015645	7-173 to 7-180	7-145	7-146	7-181 to 7-183
	YTO SYNTHE	BLK-015649	7-185 to 7-192	7-145	7-146	7-193 to 7-196
	INPUT ATT	BTB-015641	7-197	7-145	7-146	7-199
	1ST MIXER	BTB-015642	7-201	7-145	7-146	7-203
	2ND CONV	BTD-015644	7-205 to 7-207	7-145	7-146	7-209 to 7-210
TG	TG BLOCK	WBL-3361TG	7-211	7-213 7-215	7-214 7-216	7-217
	OUTPUT AMP	BED-015986	7-219 to 7-221	7-215	7-216	7-223
	TG SAMPLER	BLB-015987	7-225	7-213	7-214	7-227
	ALC CONT.	BLC-015680	7-229 to 7-230	7-215	7-216	7-231
	T.G CONT.	BLC-015681	7-233	7-235	-	7-236
	TG PLL	BLD-015988	7-237 to 7-238	7-213	7-214	7-239
	4GHZ OSC	BTB-015676	7-241	7-215	7-216	7-243
	TG MIX-1	BTB-015722	7-245	7-213	7-214	7-247
	TG MIX-2	BTB-015723	7-249	7-213	7-214	7-251
	MOTHER	BLH-015674	7-253	-	-	7-255 to 7-256
	BATT. HOLDER	BLB-016053	7-257	-	-	7-259

R3261/3361
IC CARD
BLQ-015745 (1/1)

Parts No.	Advantest Stock No.	Description					Note
C1-4	CSM-AGR1U50V	FXD	CER	0.1µF	+80%, -20%	50V	
C5	CSM-AGR1U50V	FXD	CER	0.1µF	+80%, -20%	50V	
D1	NLD-000001	LED					
J1	JCR-AF026PX02	CONNECTOR					
J2	SEE-MZE8101AAA	CONNECTOR					
Q1	STP-2SA642-33	TRANSISTOR	PNP				
Q2	STN-RN1002	TRANSISTOR	NPN				
R1	RCB-AG56K	FXD	CAR	56KΩ	±5%	1/8W	
R2	RCB-AG560	FXD	CAR	560Ω	±5%	1/8W	
R3	RCB-AG1K	FXD	CAR	1KΩ	±5%	1/8W	
R4	RAY-AL100K4	FXD	RA	100KΩ	±5%		
U1	SIM-74HC245S	OCTAL BUS TRANSCEIVERS					
U2	SIM-74HC541S	OCTAL BUFFERS & LINE DRIVERS					
U3	SIM-74HC74S	DUAL D FLIP-FLOPS WITH RESET & CLEAR					
U4	SIM-74HC10S	TRIPLE 3-INPUT POSITIVE-NAD					
U5	SIT-74LS375S	4-BIT BISTABLE LATCHES					
U6	SIM-74HC02S	QUAD 2-INPUT POSITIVE NOR					
U7	SIM-74HC04S	HEX INVERTERS					

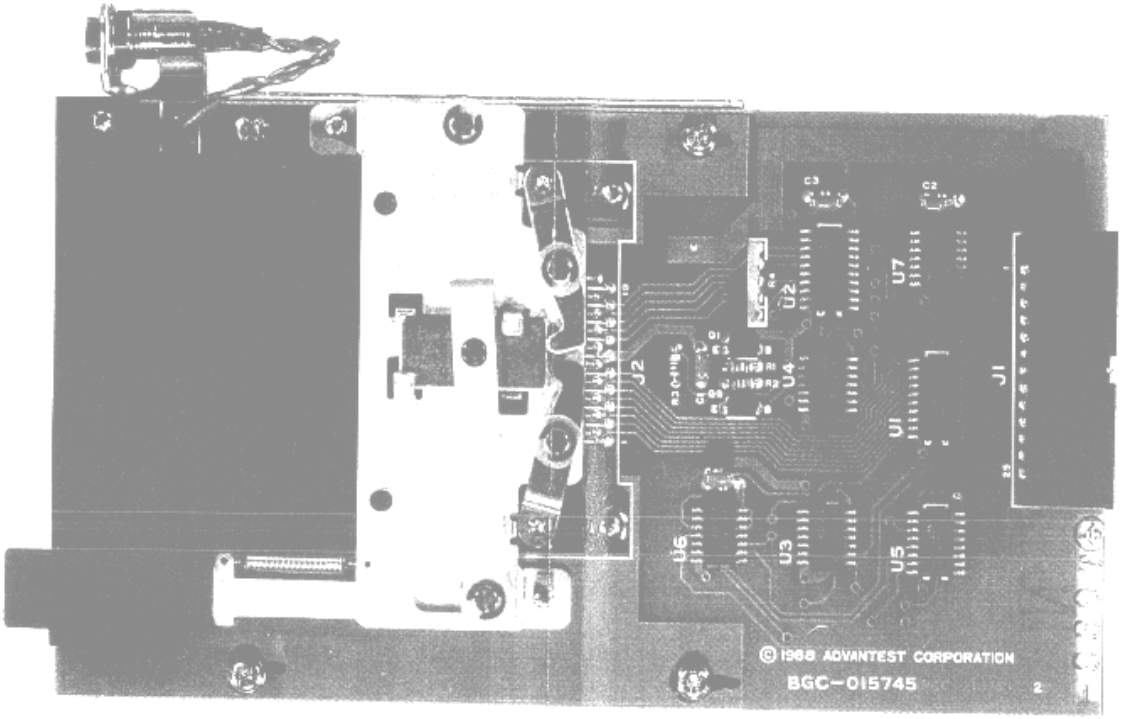

PARTS LOCATION
IC CARD
BGC-015745

1. DIAGRAMS ILLUSTRATION

1-1 SYMBOLS REFERENCE DESIGNATORS

1) IC PIN NAME (PIN-NAME OF NEGATIVE LOGIC ARE DISPLAYED BY SMALL LETTER)

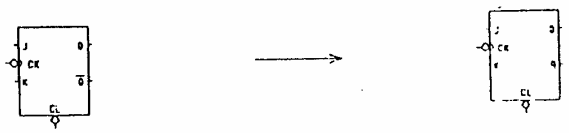

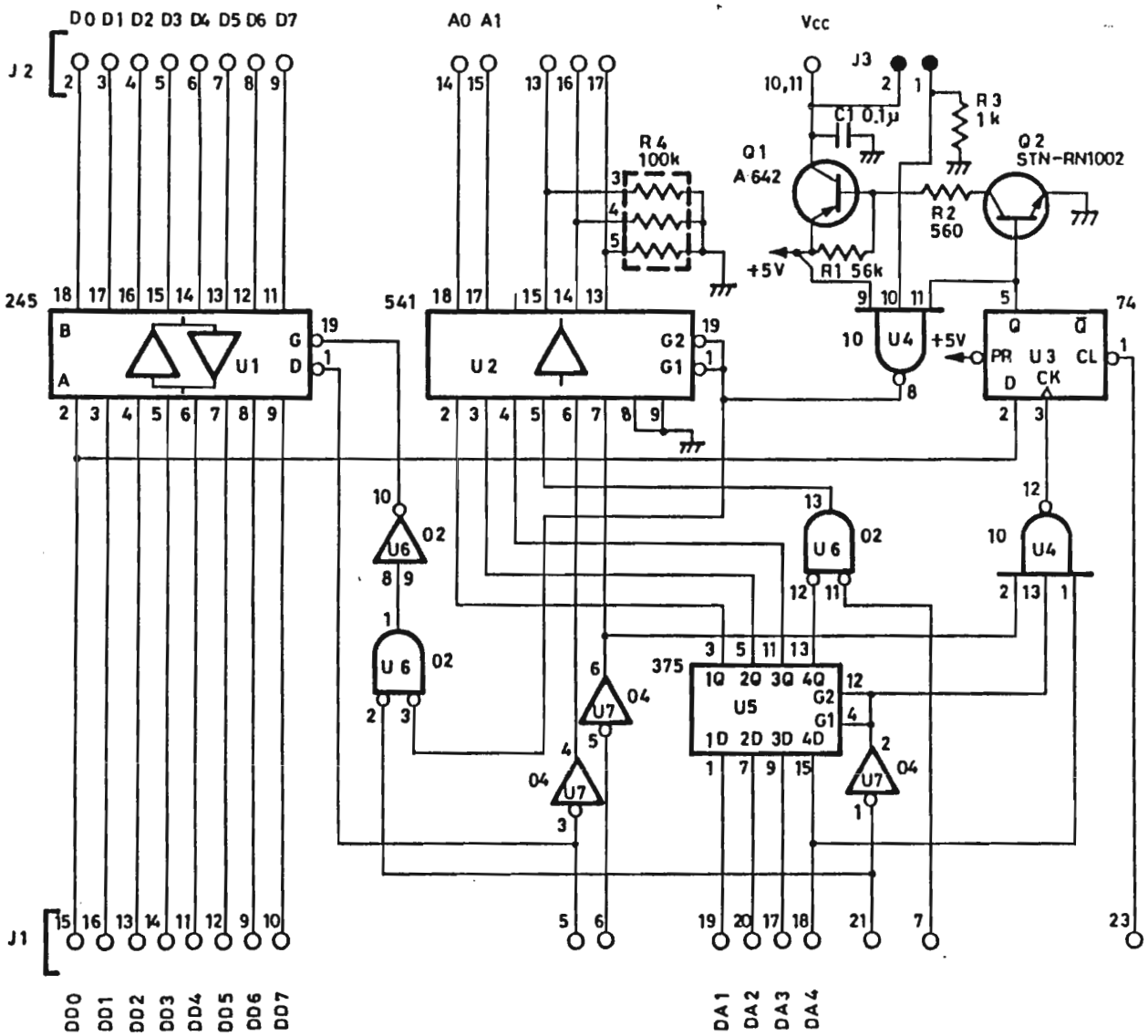
A
B
C
D
E
D0 D1 D2 D3 D4 D5 D6 D7
J2
A0 A1
Vcc
J3
10,11
C1 0.1µ
R3 1k
R4 100k
Q1 A642
Q2 STN-RN1002
R2 560
R1 56k
+5V
245
U1
541
U2
U4
74
U3
U6
U7
375
U5
J1
DD0 DD1 DD2 DD3 DD4 DD5 DD6 DD7
DA1 DA2 DA3 DA4

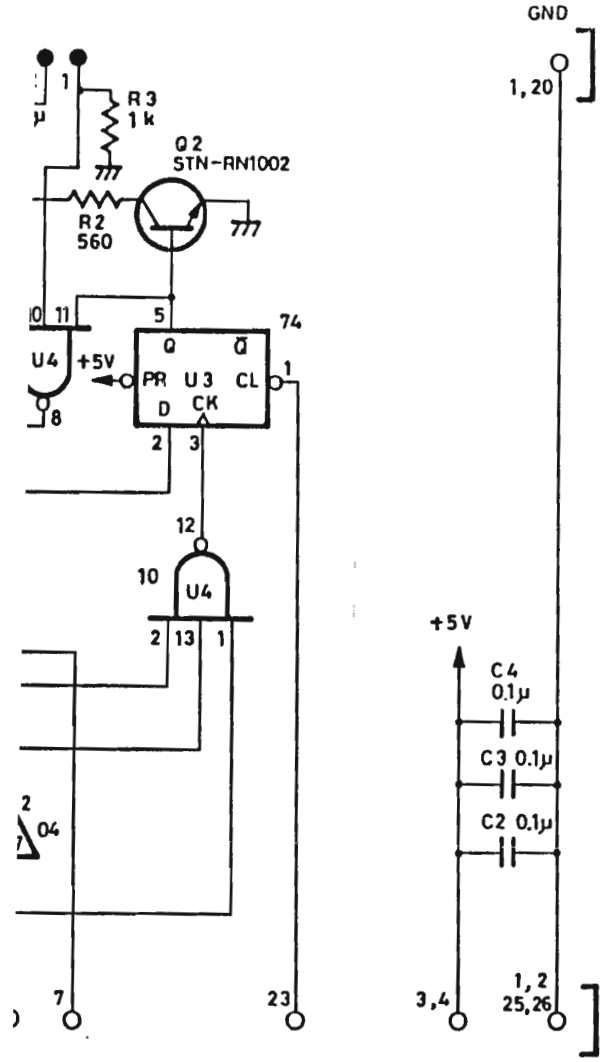

R3261/3361 IC CARD
BGC-015745 2/2

R3261/3361
CONTROL
BLQ-015670 (1/2)

Parts No.	Advantest Stock No.	Description					Note
B1	DEE-001129	BUZZER					
C1	CCK-BX10U25V	FXD	ELECT	10μF	±20%	25V	
C3	CCK-BX100U35V	FXD	ELECT	100μF	±20%	35V	
C5	CCK-BX10U25V	FXD	ELECT	10μF	±20%	25V	
C7	CSM-AGR1U50V	FXD	CER	0.1μF	±20%	50V	
C27	CCK-BX10U16V	FXD	ELECT	10μF	±20%	16V	
C28	CSM-AGR1U50V	FXD	CER	0.1μF	±20%	50V	
C30	CCK-BX10U16V	FXD	ELECT	10μF	±20%	16V	
C31	CSM-AGR1U50V	FXD	CER	0.1μF	±20%	50V	
C35	CCK-BX10U16V	FXD	ELECT	10μF	±20%	16V	
C36	CSM-AGR1U50V	FXD	CER	0.1μF	±20%	50V	
D1	SDZ-H3-8	ZENER DIODE					
D2	NLD-000016	LED					
J1	JCS-BQ096PX01	CONNECTOR					
J2	JCR-AF026PX02	CONNECTOR					
J3	JCP-AA012PX07	CONNECTOR					
J4	JCR-AF034PX02	CONNECTOR					
L1	LCL-C00010	COIL		180μH	±10%		
L2	LCL-T00084A	COIL		(CUSTOM DEVICE)			
L3	LCL-C00010	COIL		180μH	±10%		
Q1	STN-2SC1815	TRANSISTOR		NPN			
R1	RAY-TL1K4	FXD	RA	1kΩ×4	±5%	1/8W	
R2	RCB-AG1R5K	FXD	CAR	1.5kΩ	±5%	1/8W	
R3	RCB-AG10K	FXD	CAR	10kΩ	±5%	1/8W	
R4	RCB-AG1K	FXD	CAR	1kΩ	±5%	1/8W	
R6	RAY-TL3R9K8	FXD	RA	3.9kΩ×8	±5%	1/8W	
R12	RAY-BGX0015	FXD	RA		±20%		
R14	RCB-AG6R8K	FXD	CAR	6.8kΩ	±5%	1/8W	
R15	RCB-AG3R3K	FXD	CAR	3.3kΩ	±5%	1/8W	
R16	RCB-AG1K	FXD	CAR	1kΩ	±5%	1/8W	
U1	SIM-74HC244	OCTAL BUFFERS					
U3	SIM-74HC652	OCTAL BUS TRANCEIVERS & REGISTERS					
U5	SIT-75188	QUAD LINE DRIVER					
U6	SIM-74HC125	QUAD BUS BUFFER GATES					
U7	SIM-74HC04	HEX INVERTERS					
U8	SIM-74HC74	DUAL D FLIP-FLOPS WITH PRESET & CLEAR					
U10	SIM-74HC139	DUAL 2 TO 4-LINE DECODERS					
U11	SIM-74HC138	3 TO 8-LINE DECODERS					
U13	SIM-74HC00	QUAD 2 INPUT POSI-NAND GATES					
U14	SIM-74HC32	QUAD 2 INPUT POSI-OR GATES					

R3261/3361
CONTROL
BLQ-015670 (2/2)

Parts No.	Advantest Stock No.	Description	Note
U15	SIM-74HC08	QUAD 2 INPUT POSI-AND GATES	
U16	SIM-74HC32	QUAD 2 INPUT POSI-OR GATES	
U17	SIM-74HC74	DUAL D FLIP-FLOPS WITH PRESET & CLEAR	
U18	SMM-518128AL10	131072-WORD×3-BIT PSEUDO STATIC RAM	
U20	SIM-74HC32	QUAD 2 INPUT POSI-OR GATES	
U21	SIM-74HC125	QUAD BUS BUFFER GATES	
U22	SIM-74HC32	QUAD 2 INPUT POSI-OR GATES	
U23	SMM-518128AL10	131072-WORD×3-BIT PSEUDO STATIC RAM	
U25	SIM-74HC04	HEX INVERTER	
U26	SIM-74HC32	QUAD 2 INPUT POSI-OR GATES	
U27	SIM-74HC107	DUAL J-K FLIP-FLOPS WITH CLEAR	
U28	SIM-74HC164	8-BIT PARALLEL OUTPUT SERIAL SHIFT REGISTERS	
U29	SIM-74HC157	QUAD 2 TO 1 LINE DATA SELECTORS	
U30	SIM-74HC05	HEX INVERTERS (OPEN DRAIN)	
U31	SIM-654815	DECODER & CLOCK GENERATORS	
U32	SMM-27C1001A	131072-WORD×8-BIT EPROM	
U33	SMM-27C1001A	131072-WORD×8-BIT EPROM	
U34	SIM-8254C	PROGRAMMABLE COUNTER/TIMER	
U35	SIM-74HC08	QUAD 2 INPUT POSI-AND GATES	
U36	SIM-74HC74	DUAL D FLIP-FLOPS WITH PRESET & CLEAR	
U37	SMM-27C1001A	131072-WORD×8-BIT EPROM	
U38	SMM-27C1001A	131072-WORD×8-BIT EPROM	
U39	SIM-74HC32	QUAD 2 INPUT POSI-OR GATES	
U40	SIM-74HC574	OCTAL D FLIP-FLOPS	
U42	SIM-8251	SERIAL COMMUNICATION INTERFACE	
U43	SIM-9914	GP AB CONTROLLER	
U44	SIT-74LS245	OCTAL BUS TRANSCEIVERS	
U46	SIT-74LS641	OCTAL BUS TRANSCEIVERS (OPEN COLLECTOR)	
U48	SIT-75189	QUAD LINE RECEIVERS	
U49	SIT-75162	OCTAL GP AB TRANSCEIVERS	
U50	SIT-75160	OCTAL GP AB TRANSCEIVERS	
U51	SIM-68HC000C	16-BIT MICROPROCESSOR	

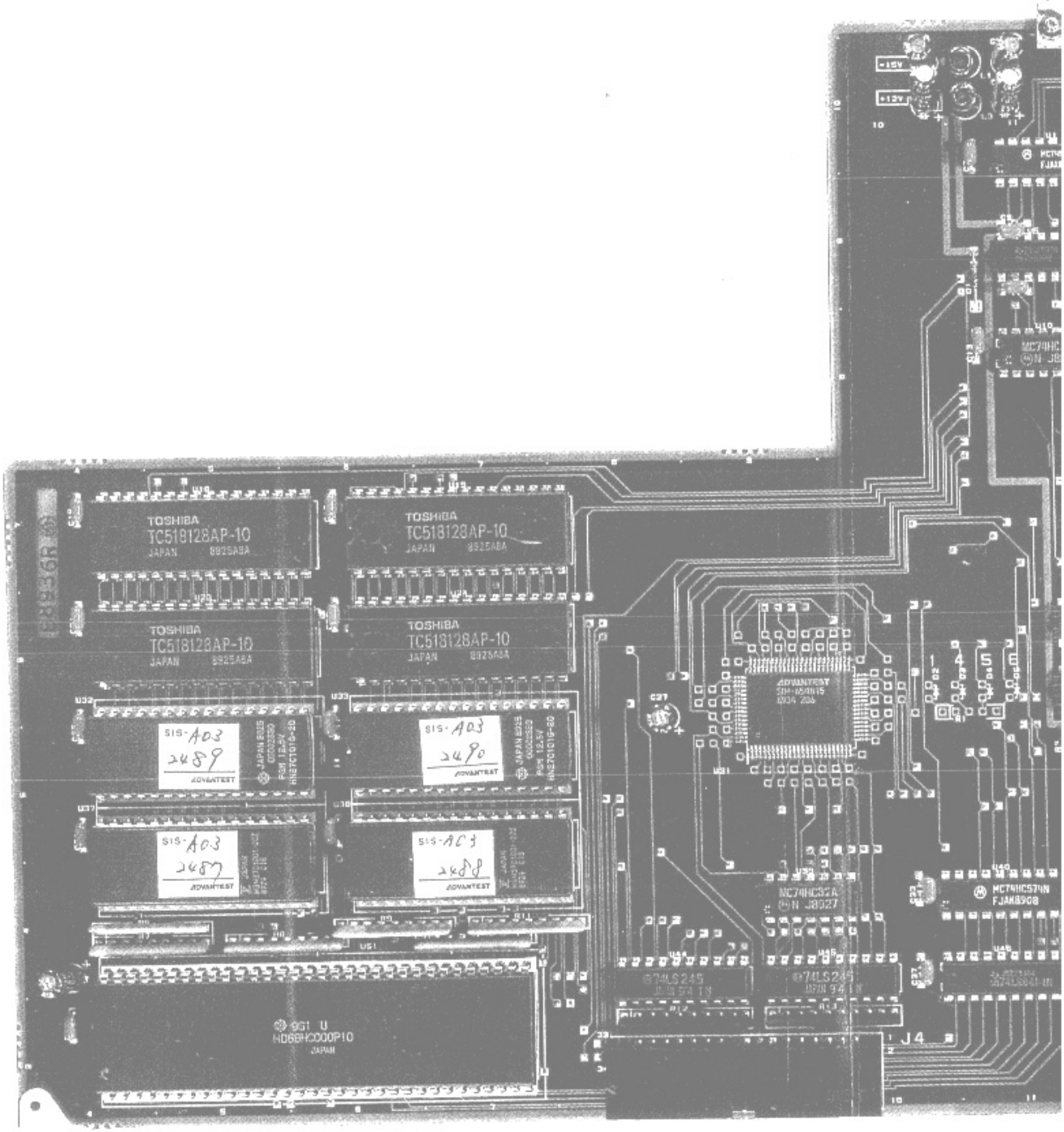
TOSHIBA
TC518128AP-10
JAPAN
TOSHIBA
TC518128AP-10
JAPAN
TOSHIBA
TC518128AP-10
JAPAN
TOSHIBA
TC518128AP-10
JAPAN
SIS-A03
2489
ADVANTEST
SIS-A03
2490
ADVANTEST
SIS-A03
2487
ADVANTEST
SIS-A03
2488
ADVANTEST
SG1 U
HD68HC000P10
JAPAN
74LS245
74LS245
MC74HC32A
MC74HC574N
J4

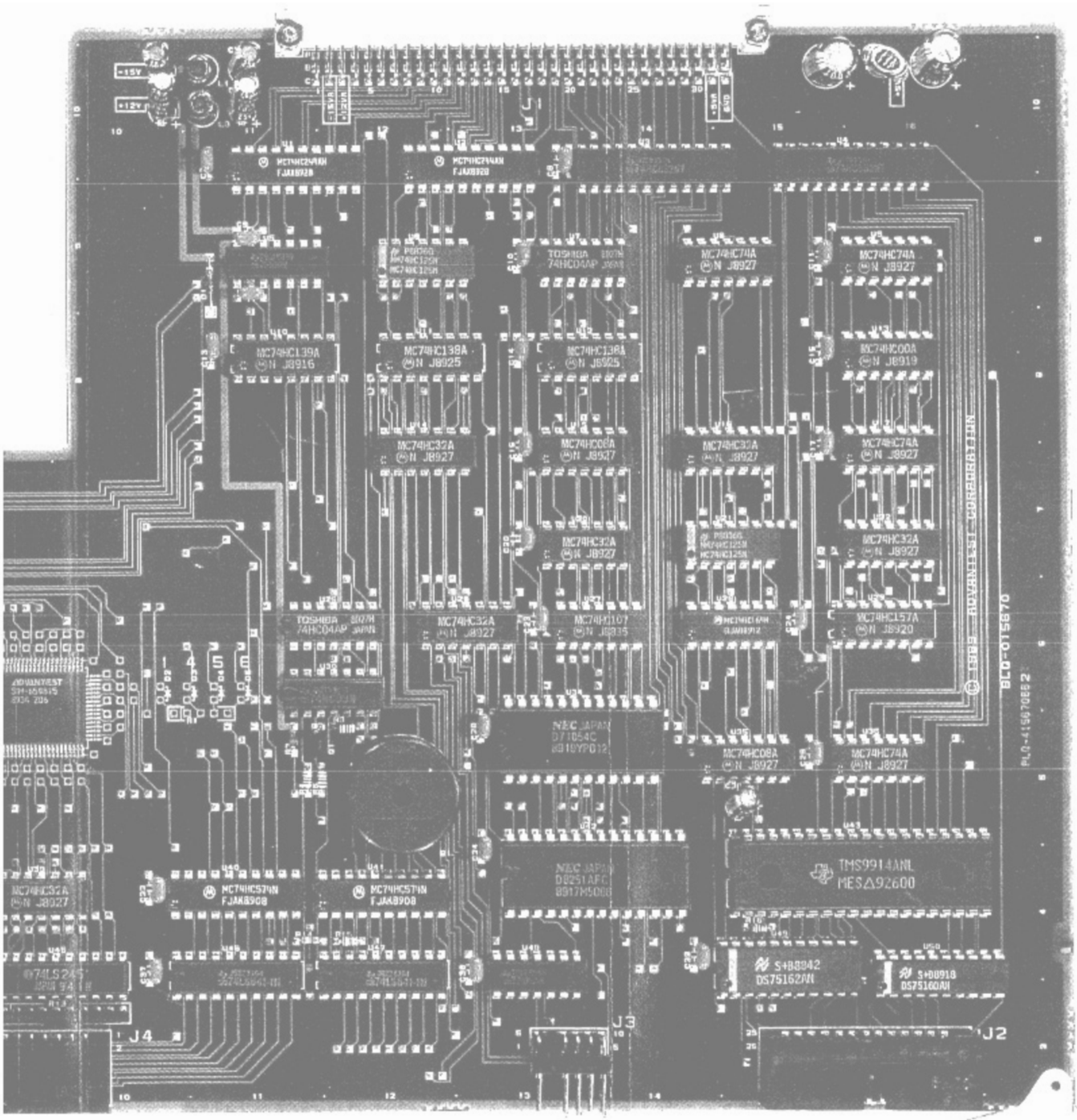

PARTS LOCATION
CONTROL
BLQ-015670

1. DIAGRAMS ILLUSTRATION

1-1 SYMBOLS REFERENCE DESIGNATORS

1) RESISTOR

(1) RAY-AL3R9K8

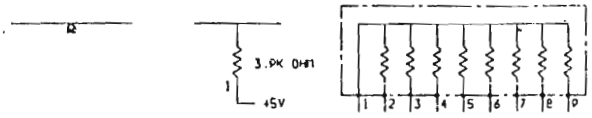

SYMBOL CIRCUIT PART

2) IC PIN NAME (PIN-NAME OF NEGATIVE LOGIC ARE DISPLAYED BY SMALL LETTER)

(2) RAY-BCX0015

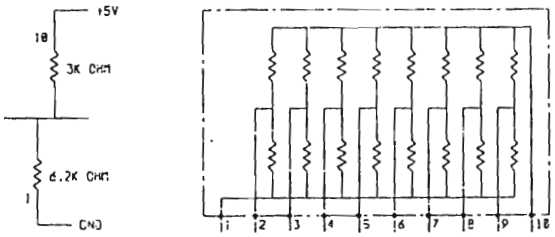

SYMBOL CIRCUIT PART

R3261/3361 CONTROL
BLQ-015670 1/17

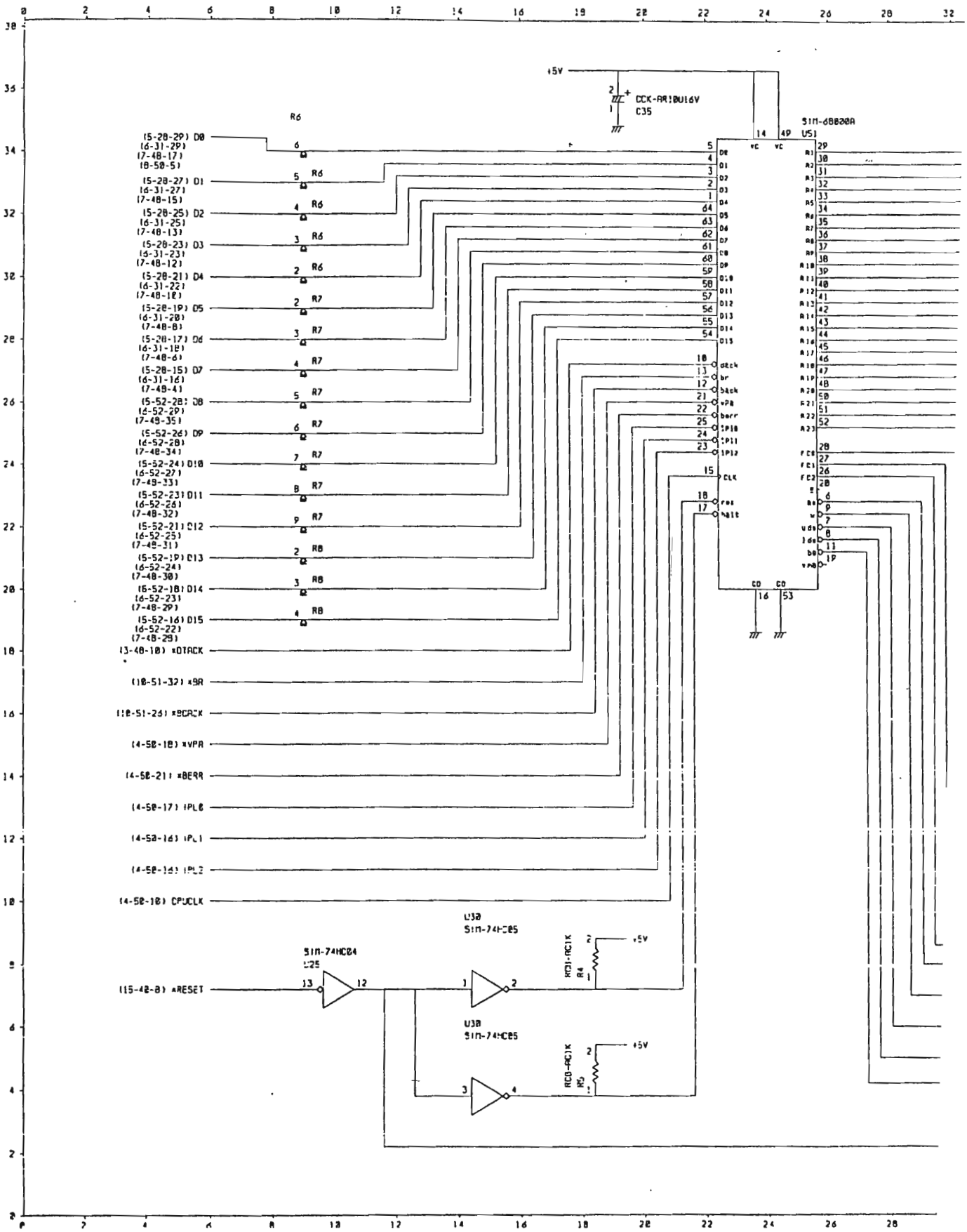
+5V
CCK-AR10U16V
C35
R6
SIM-68B20A
U51
(5-20-29) D0
(6-31-29)
(7-48-17)
(8-50-5)
(5-20-27) D1
(6-31-27)
(7-48-15)
(5-20-25) D2
(6-31-25)
(7-48-13)
(5-20-23) D3
(6-31-23)
(7-48-12)
(5-20-21) D4
(6-31-22)
(7-48-10)
(5-20-19) D5
(6-31-20)
(7-48-8)
(5-20-17) D6
(6-31-18)
(7-48-6)
(5-20-15) D7
(6-31-16)
(7-48-4)
(5-52-28) D8
(6-52-29)
(7-48-35)
(5-52-26) D9
(6-52-28)
(7-48-34)
(5-52-24) D10
(6-52-27)
(7-48-33)
(5-52-23) D11
(6-52-26)
(7-48-32)
(5-52-21) D12
(6-52-25)
(7-48-31)
(5-52-19) D13
(6-52-24)
(7-48-30)
(5-52-18) D14
(6-52-23)
(7-48-29)
(5-52-16) D15
(6-52-22)
(7-48-28)
(3-48-10) xDTACK
(10-51-32) xBR
(10-51-26) xBGACK
(4-50-18) xVPA
(4-50-21) xBERR
(4-50-17) IPL0
(4-50-16) IPL1
(4-50-14) IPL2
(4-50-10) CPUCLK
(15-48-8) xRESET
U30
SIM-74HC04
U25
U30
SIM-74HC05
U30
SIM-74HC05
RC1-RC1K
R4
RC0-RC1K
R5
+5V
+5V

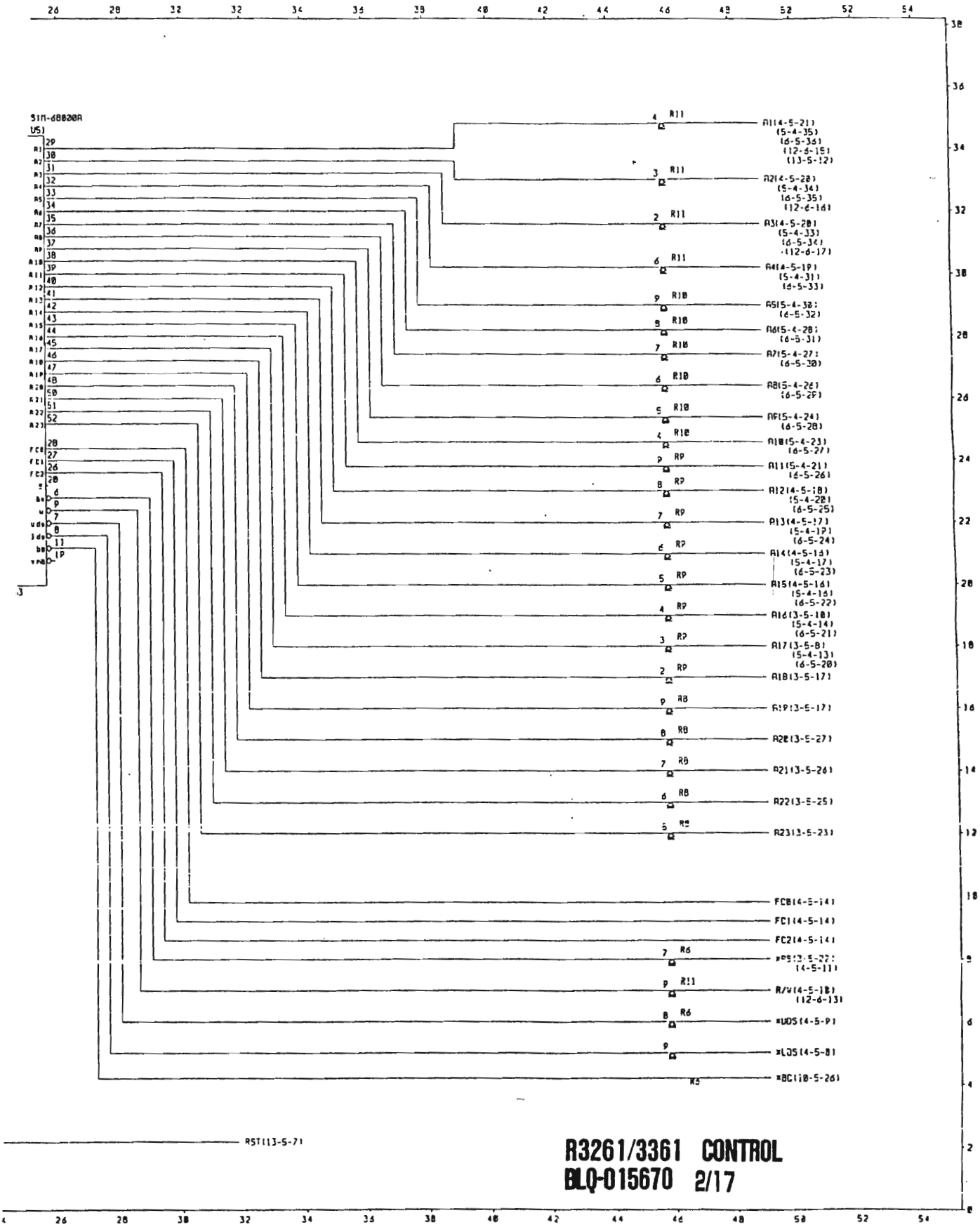

R3261/3361 CONTROL
BLQ-015670 2/17

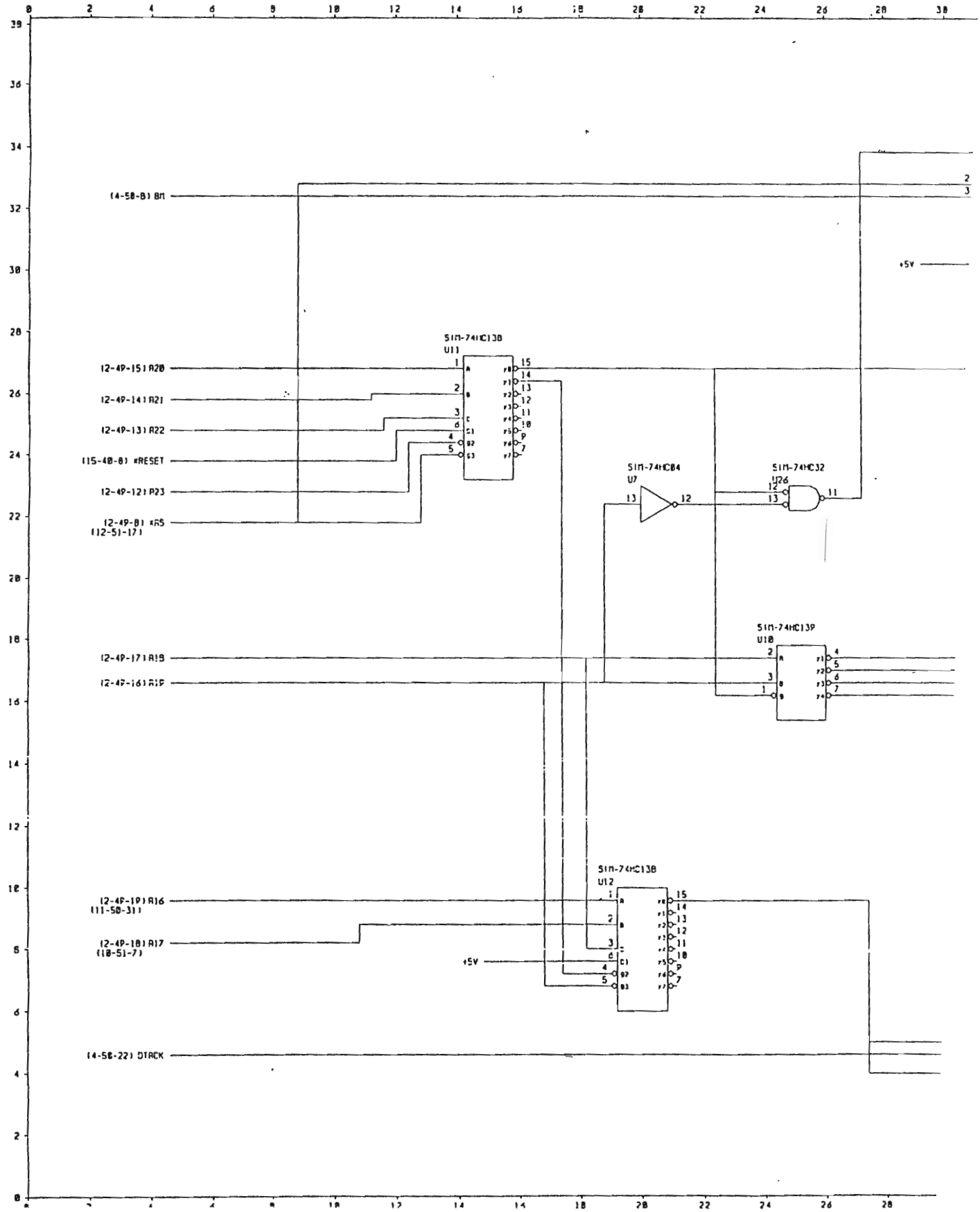
(4-5B-B) BM
+5V
SIM-74HC138
U11
(2-4P-15) A20
(2-4P-14) A21
(2-4P-13) A22
(15-4B-B) *RESET
(2-4P-12) A23
(2-4P-B) *RS
(12-5J-17)
SIM-74HC04
U7
SIM-74HC32
U26
SIM-74HC139
U10
(2-4P-17) A19
(2-4P-16) A18
SIM-74HC138
U12
(2-4P-19) A16
(11-5B-31)
(2-4P-18) A17
(18-5J-7)
+5V
(4-5B-22) DTACK

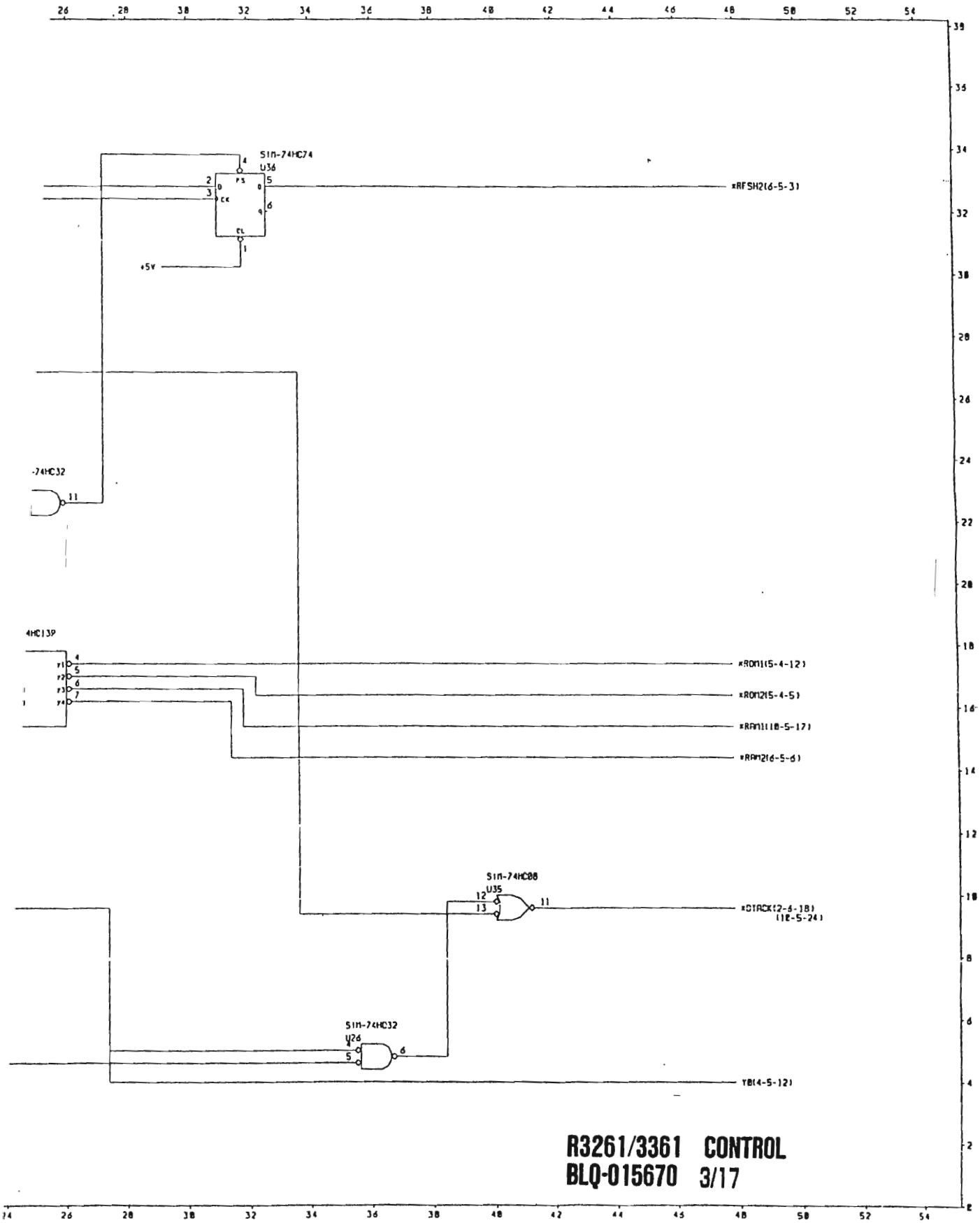

R3261/3361 CONTROL
BLQ-015670 3/17

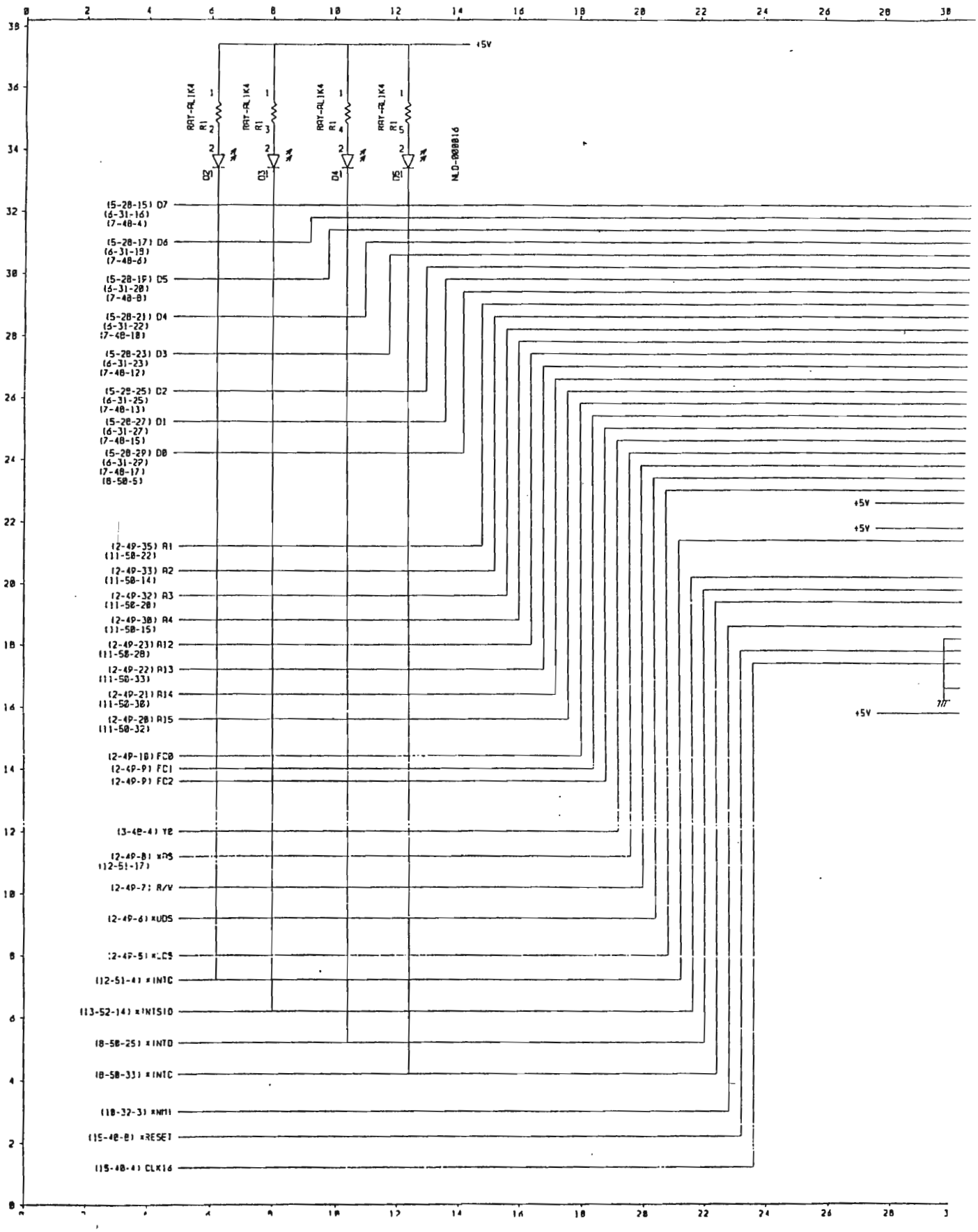
+5V
RRT-RL1K4
R1
D2
D3
D4
D5
NLD-000816
(5-28-15) D7
(6-31-16)
(7-48-4)
(5-28-17) D6
(6-31-19)
(7-48-6)
(5-28-19) D5
(6-31-20)
(7-48-8)
(5-28-21) D4
(6-31-22)
(7-48-10)
(5-28-23) D3
(6-31-23)
(7-48-12)
(5-28-25) D2
(6-31-25)
(7-48-13)
(5-28-27) D1
(6-31-27)
(7-48-15)
(5-28-29) D0
(6-31-29)
(7-48-17)
(8-50-5)
+5V
+5V
(2-49-35) A1
(11-50-22)
(2-49-33) A2
(11-50-14)
(2-49-32) A3
(11-50-20)
(2-49-30) A4
(11-50-15)
(2-49-23) A12
(11-50-28)
(2-49-22) A13
(11-50-33)
(2-49-21) A14
(11-50-30)
(2-49-20) A15
(11-50-32)
+5V
(2-49-10) FC0
(2-49-9) FC1
(2-49-9) FC2
(3-48-4) YE
(2-49-8) xRS
(12-51-17)
(2-49-7) R/W
(2-49-6) xUDS
(2-49-5) xLCS
(12-51-4) xINTC
(13-52-14) xINTSIO
(8-50-25) xINTD
(8-50-33) xINTC
(18-32-3) xNMI
(15-48-8) xRESET
(15-48-4) CLK16

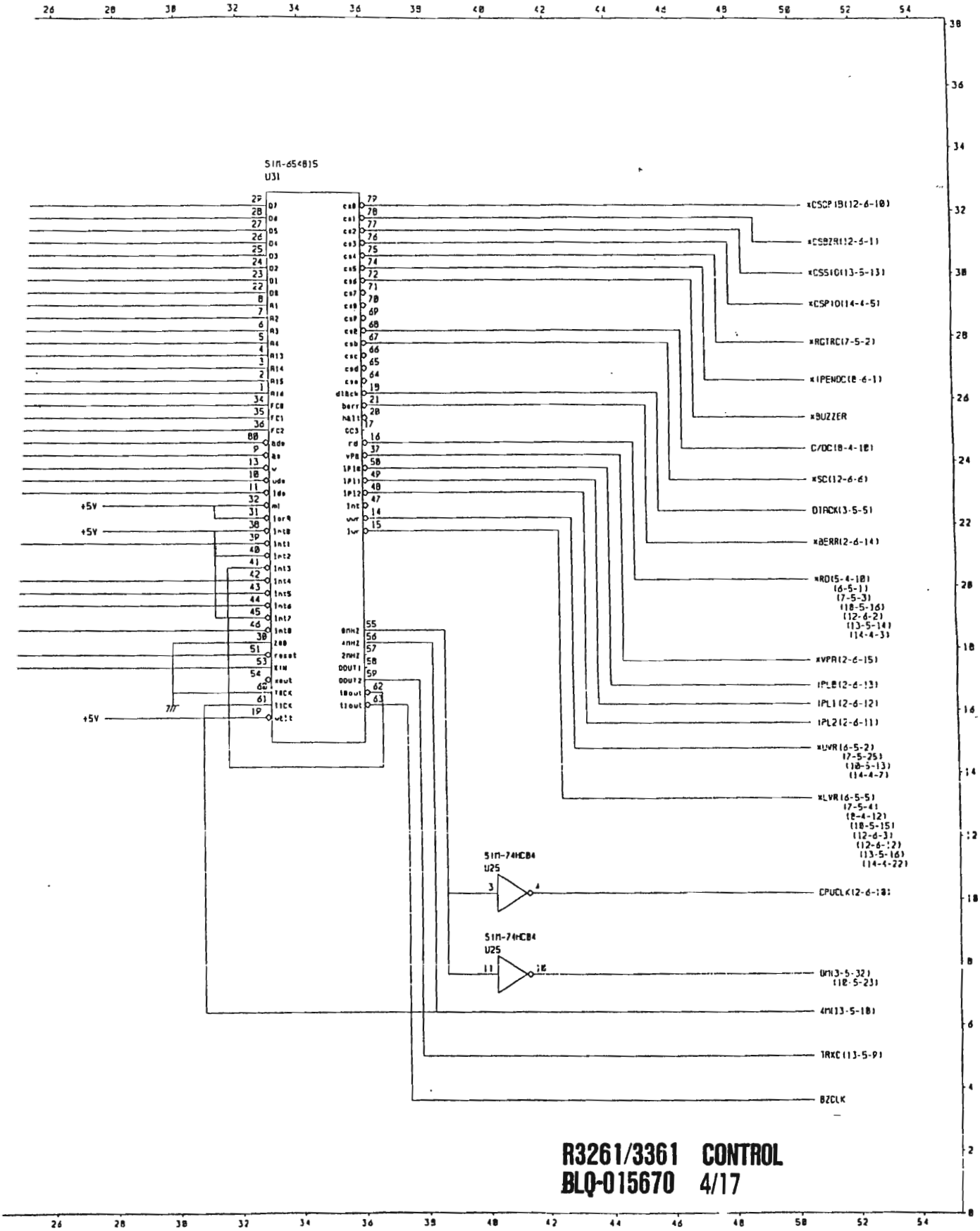

R3261/3361 CONTROL
BLQ-015670 4/17

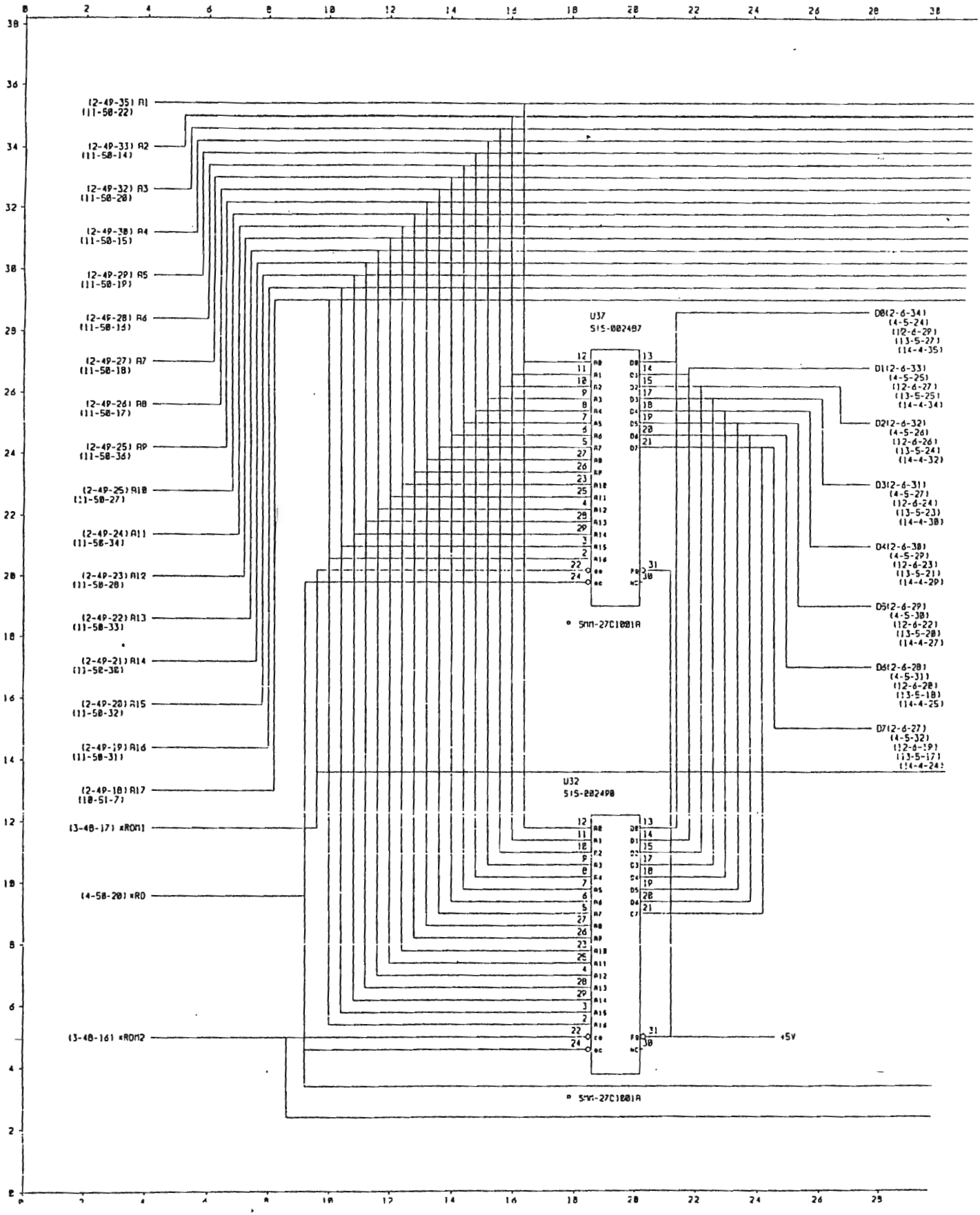
(2-49-35) A1
(11-50-22)
(2-49-33) A2
(11-50-14)
(2-49-32) A3
(11-50-20)
(2-49-30) A4
(11-50-15)
(2-49-29) A5
(11-50-19)
(2-49-28) A6
(11-50-16)
(2-49-27) A7
(11-50-18)
(2-49-26) A8
(11-50-17)
(2-49-25) A9
(11-50-36)
(2-49-25) A10
(11-50-27)
(2-49-24) A11
(11-50-34)
(2-49-23) A12
(11-50-28)
(2-49-22) A13
(11-50-33)
(2-49-21) A14
(11-50-30)
(2-49-20) A15
(11-50-32)
(2-49-19) A16
(11-50-31)
(2-49-18) A17
(10-51-7)
(3-48-17) *ROM1
(4-50-20) *RD
(3-48-16) *ROM2
U37
SIS-002487
U32
SIS-2824P8
D0(2-6-34)
(4-5-24)
(12-6-29)
(13-5-27)
(14-4-35)
D1(2-6-33)
(4-5-25)
(12-6-27)
(13-5-25)
(14-4-34)
D2(2-6-32)
(4-5-26)
(12-6-26)
(13-5-24)
(14-4-32)
D3(2-6-31)
(4-5-27)
(12-6-24)
(13-5-23)
(14-4-30)
D4(2-6-30)
(4-5-29)
(12-6-23)
(13-5-21)
(14-4-29)
D5(2-6-29)
(4-5-30)
(12-6-22)
(13-5-20)
(14-4-27)
D6(2-6-28)
(4-5-31)
(12-6-28)
(13-5-18)
(14-4-25)
D7(2-6-27)
(4-5-32)
(12-6-19)
(13-5-17)
(14-4-24)
+5V
* SMM-27C1001A
* SMM-27C1001A

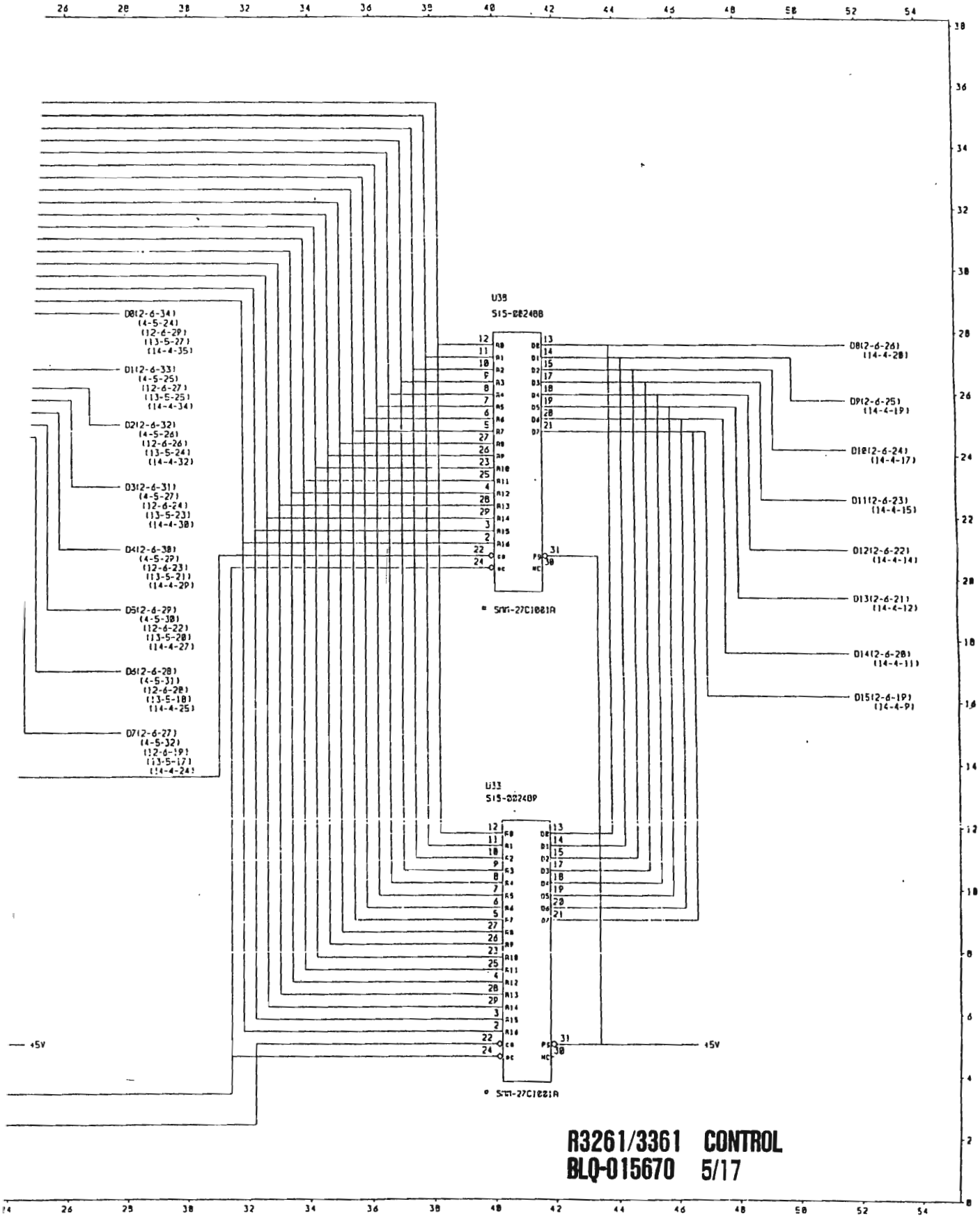

R3261/3361 CONTROL
BLQ-015670 5/17

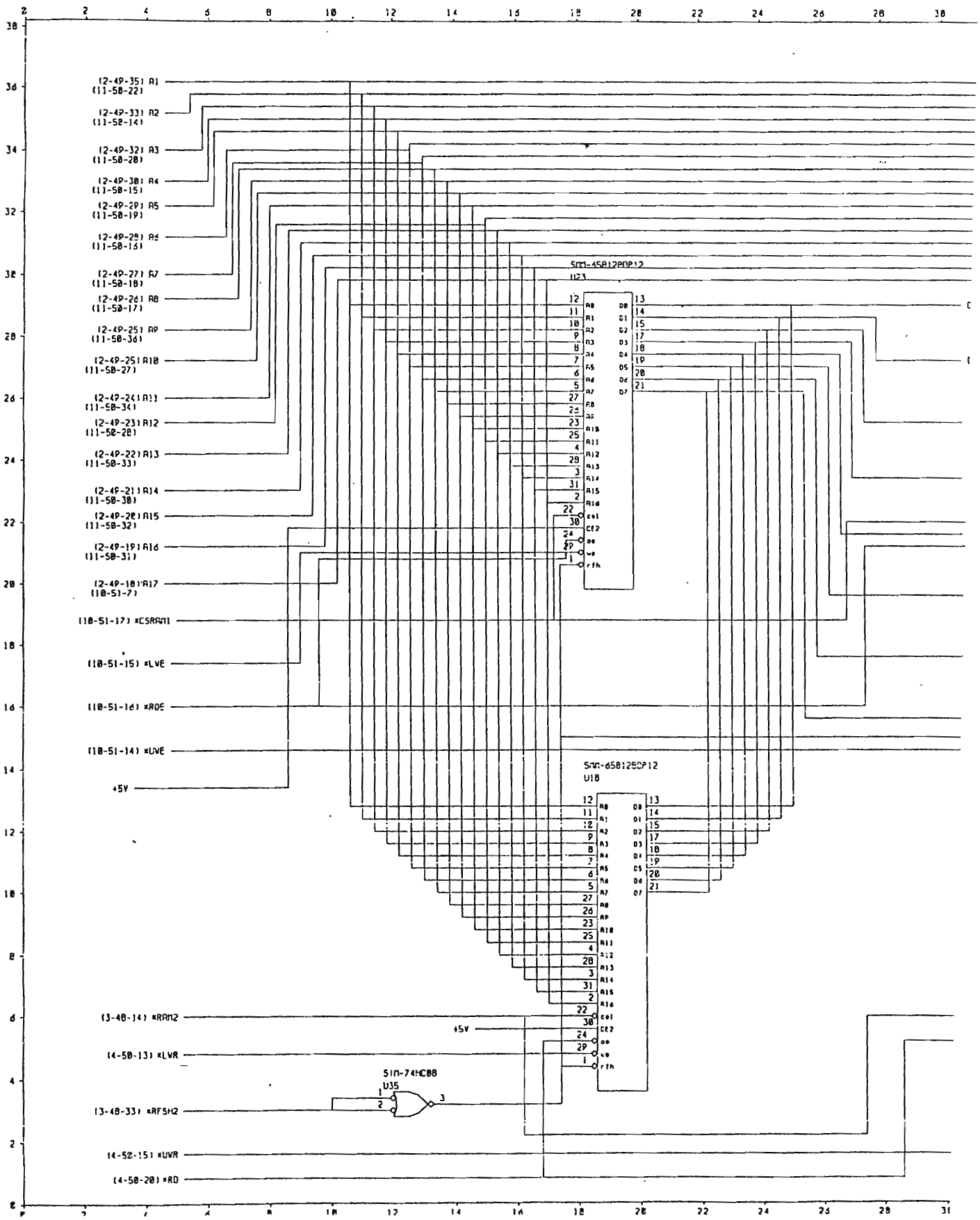
(2-49-35) A1
(11-50-22)
(2-49-33) A2
(11-50-14)
(2-49-32) A3
(11-50-20)
(2-49-30) A4
(11-50-15)
(2-49-29) A5
(11-50-19)
(2-49-28) A6
(11-50-16)
(2-49-27) A7
(11-50-18)
(2-49-26) A8
(11-50-17)
(2-49-25) A9
(11-50-36)
(2-49-24) A10
(11-50-27)
(2-49-24) A11
(11-50-34)
(2-49-23) A12
(11-50-28)
(2-49-22) A13
(11-50-33)
(2-49-21) A14
(11-50-38)
(2-49-20) A15
(11-50-32)
(2-49-19) A16
(11-50-31)
(2-49-18) A17
(10-51-7)
(10-51-17) *CSRAM1
(10-51-15) *LWE
(10-51-16) *ROE
(10-51-14) *UWE
+5V
SMM-45B128DP12
U23
SMM-6581280P12
U18
(3-40-14) *RAM2
+5V
(4-50-13) *LWR
SIM-74HC88
U35
(3-40-33) *RFSH2
(4-52-15) *UWR
(4-50-20) *RD

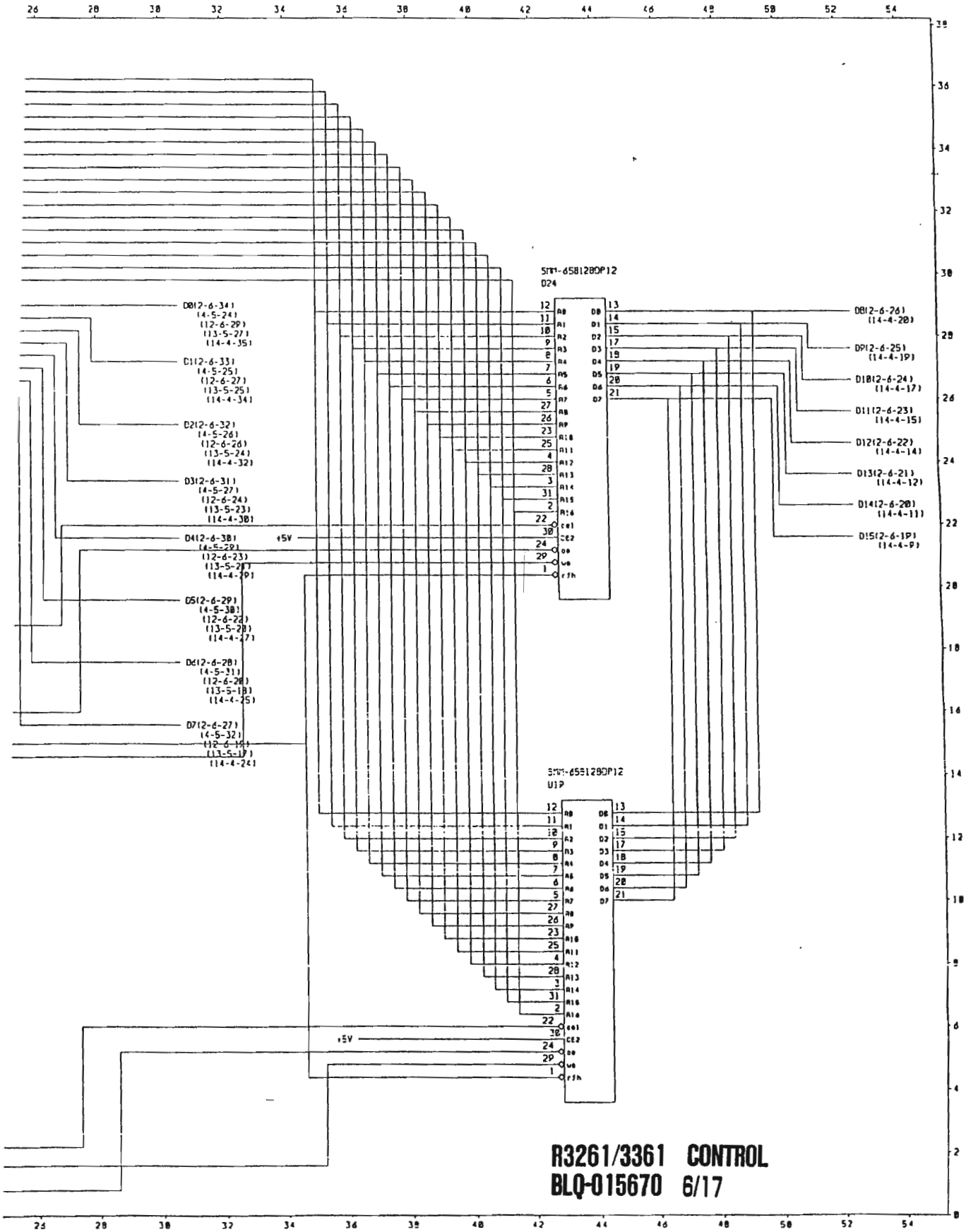

R3261/3361 CONTROL
BLQ-015670 6/17

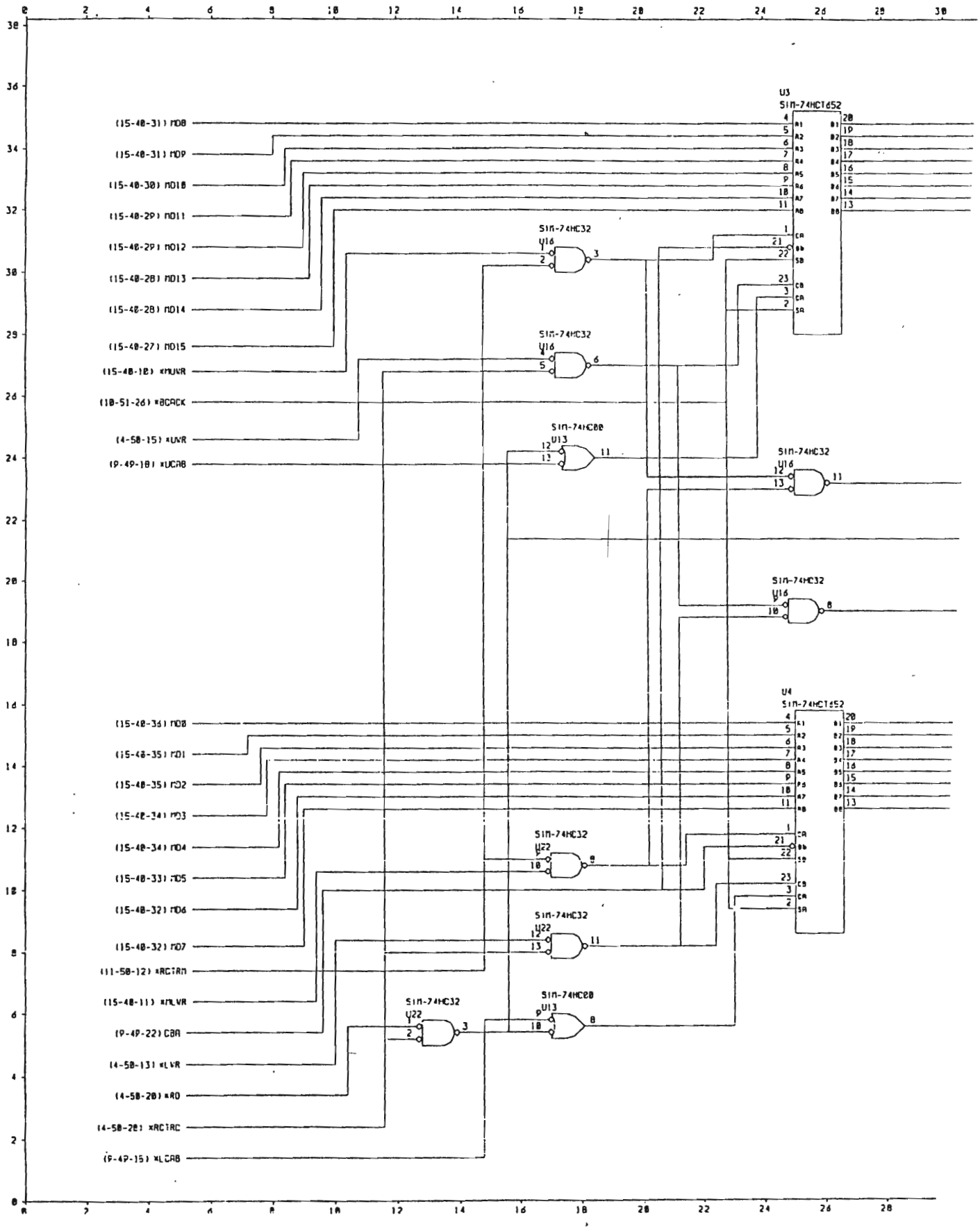
U3
SIM-74HC1652
U4
SIM-74HC1652
SIM-74HC32
SIM-74HC00
(15-40-31) MD8
(15-40-31) MD9
(15-40-30) MD10
(15-40-29) MD11
(15-40-29) MD12
(15-40-28) MD13
(15-40-28) MD14
(15-40-27) MD15
(15-40-10) xMUWR
(10-51-26) xBCACK
(4-50-15) xLWR
(9-49-10) xUCAB
(15-40-36) MD0
(15-40-35) MD1
(15-40-35) MD2
(15-40-34) MD3
(15-40-34) MD4
(15-40-33) MD5
(15-40-32) MD6
(15-40-32) MD7
(11-50-12) xRCTRM
(15-40-11) xMLWR
(9-49-22) CBA
(4-50-13) xLWR
(4-50-20) xRD
(4-50-20) xRCTRC
(9-49-15) xLCAB

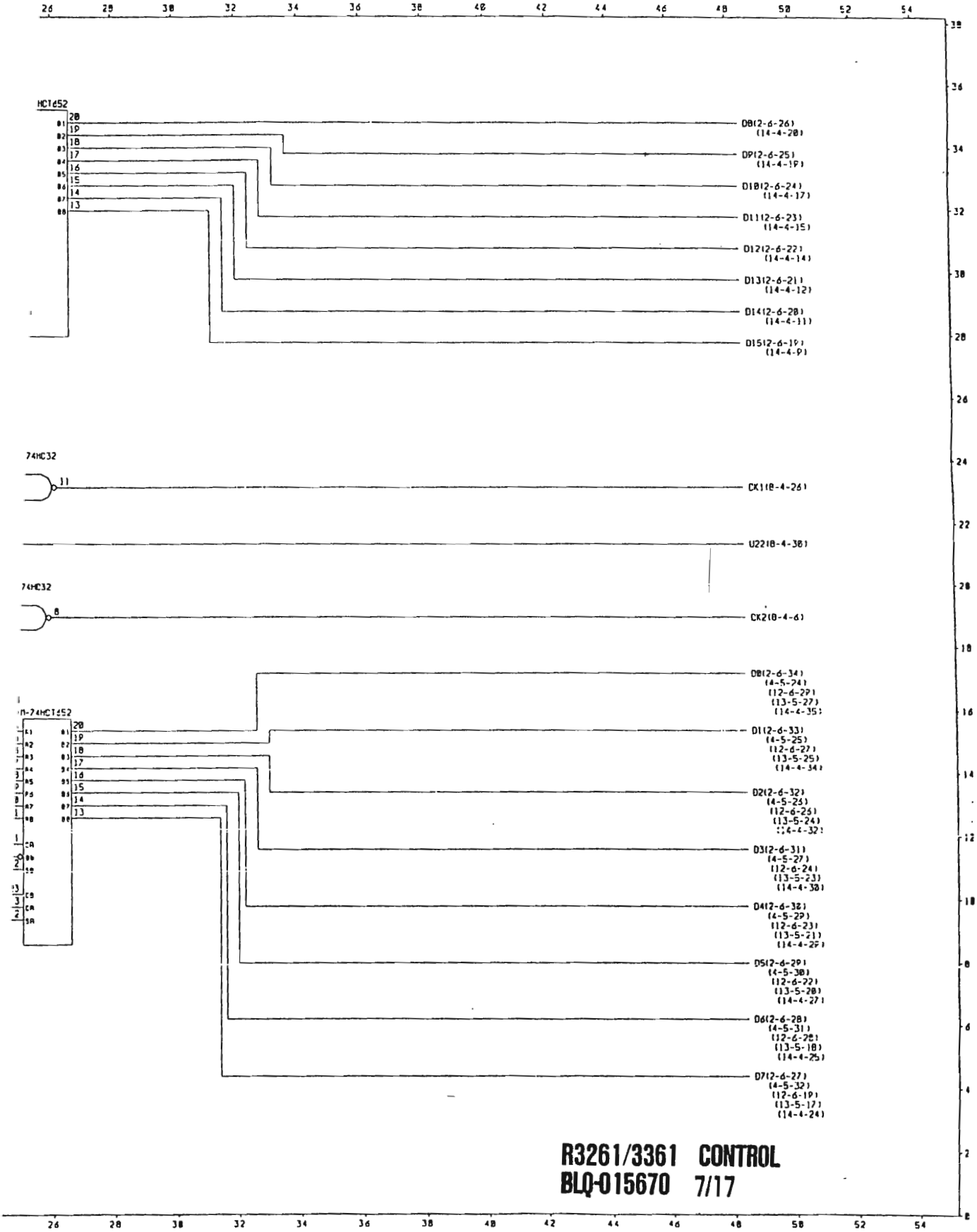

R3261/3361 CONTROL
BLQ-015670 7/17

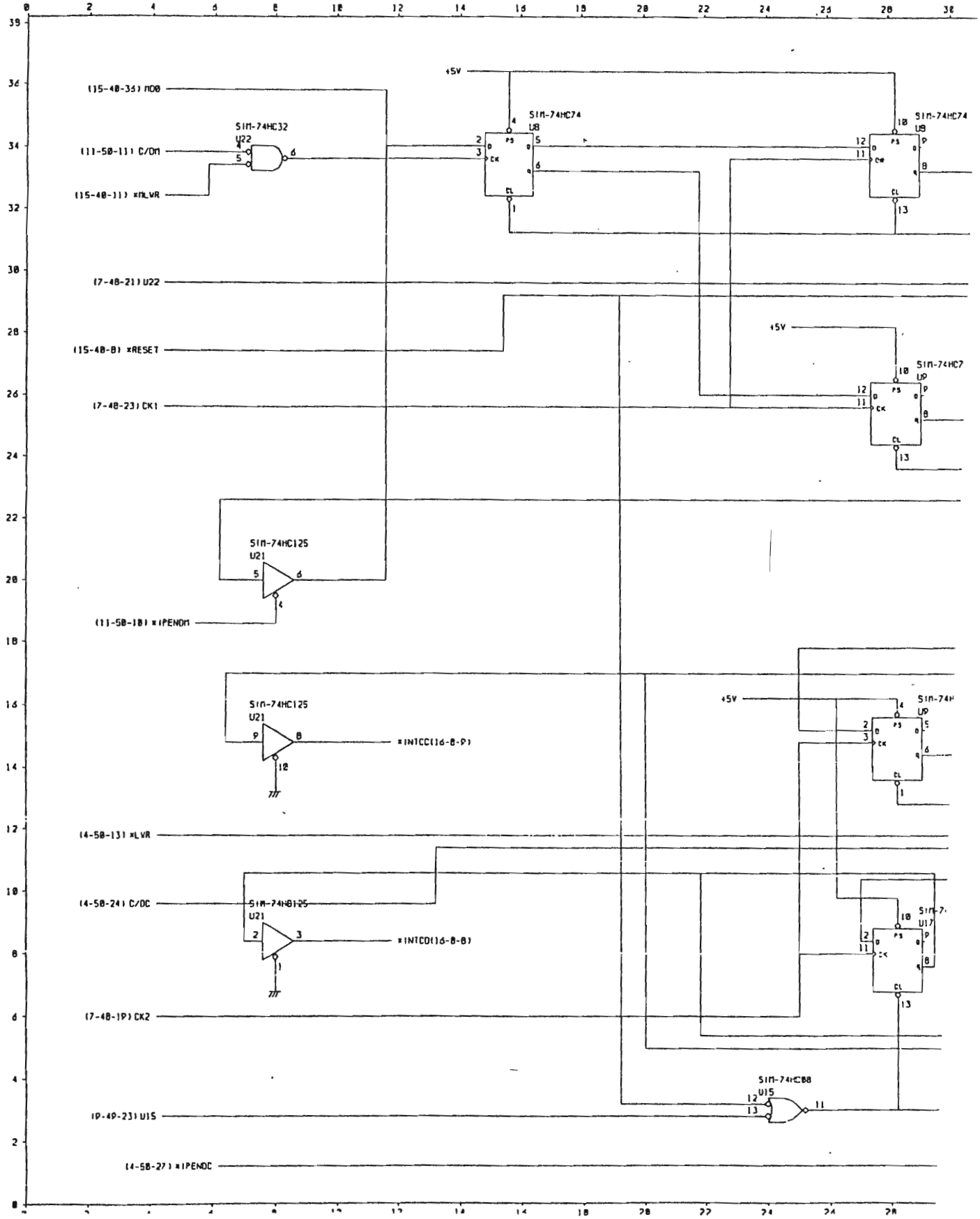
(15-40-35) MOD
(11-50-11) C/DM
(15-40-11) xMLVR
(7-40-21) U22
(15-40-8) xRESET
(7-40-23) CK1
(11-50-18) xIPENDM
(4-50-13) xLVR
(4-50-24) C/DC
(7-40-19) CK2
(19-49-23) U15
(4-50-27) xIPENDC
SIM-74HC32
U22
SIM-74HC74
U8
SIM-74HC74
U9
SIM-74HC125
U21
SIM-74HC125
U21
xINTCC(16-8-9)
SIM-74HC125
U21
xINTCD(16-8-8)
SIM-74HC88
U15
+5V

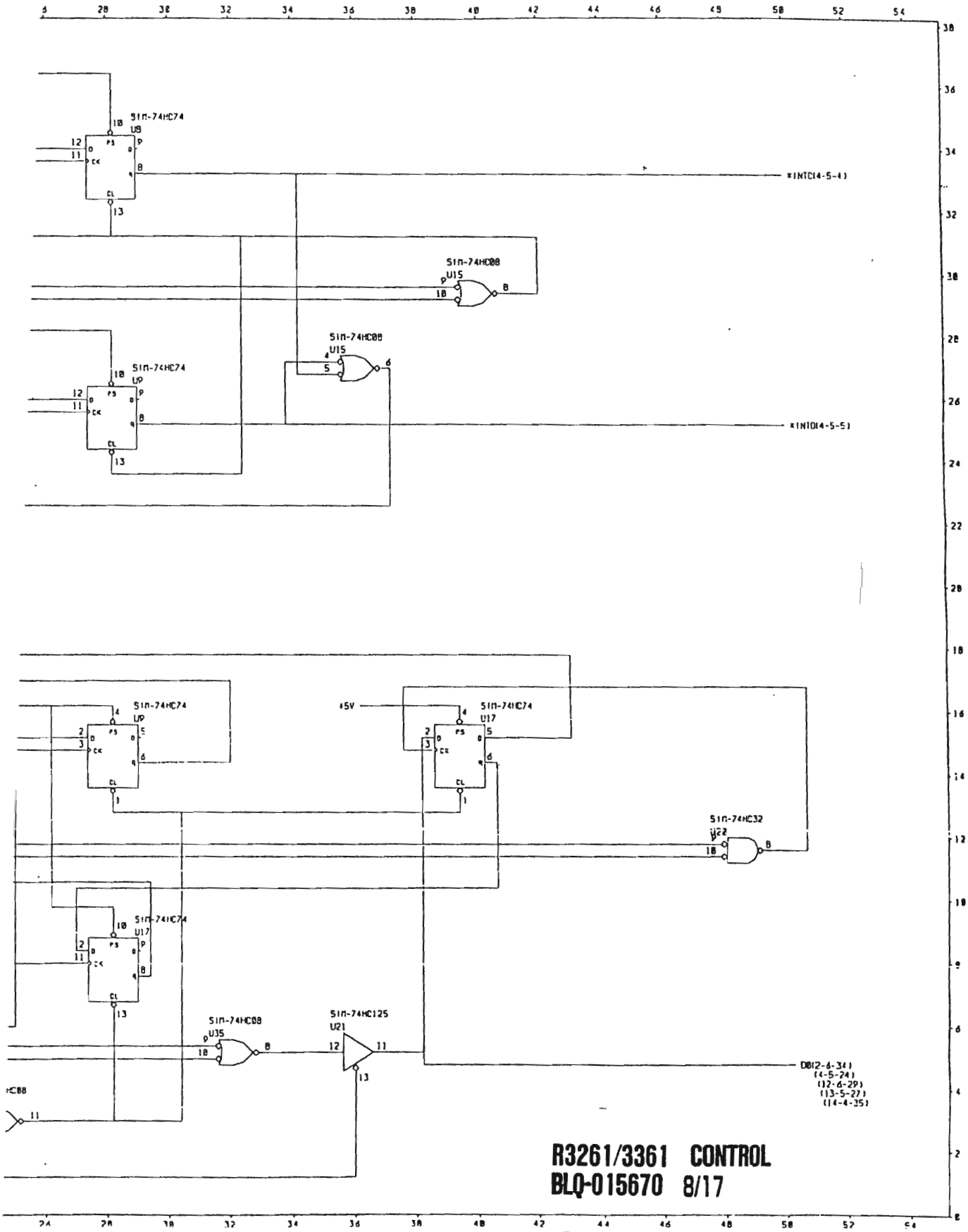

R3261/3361 CONTROL
BLQ-015670 8/17

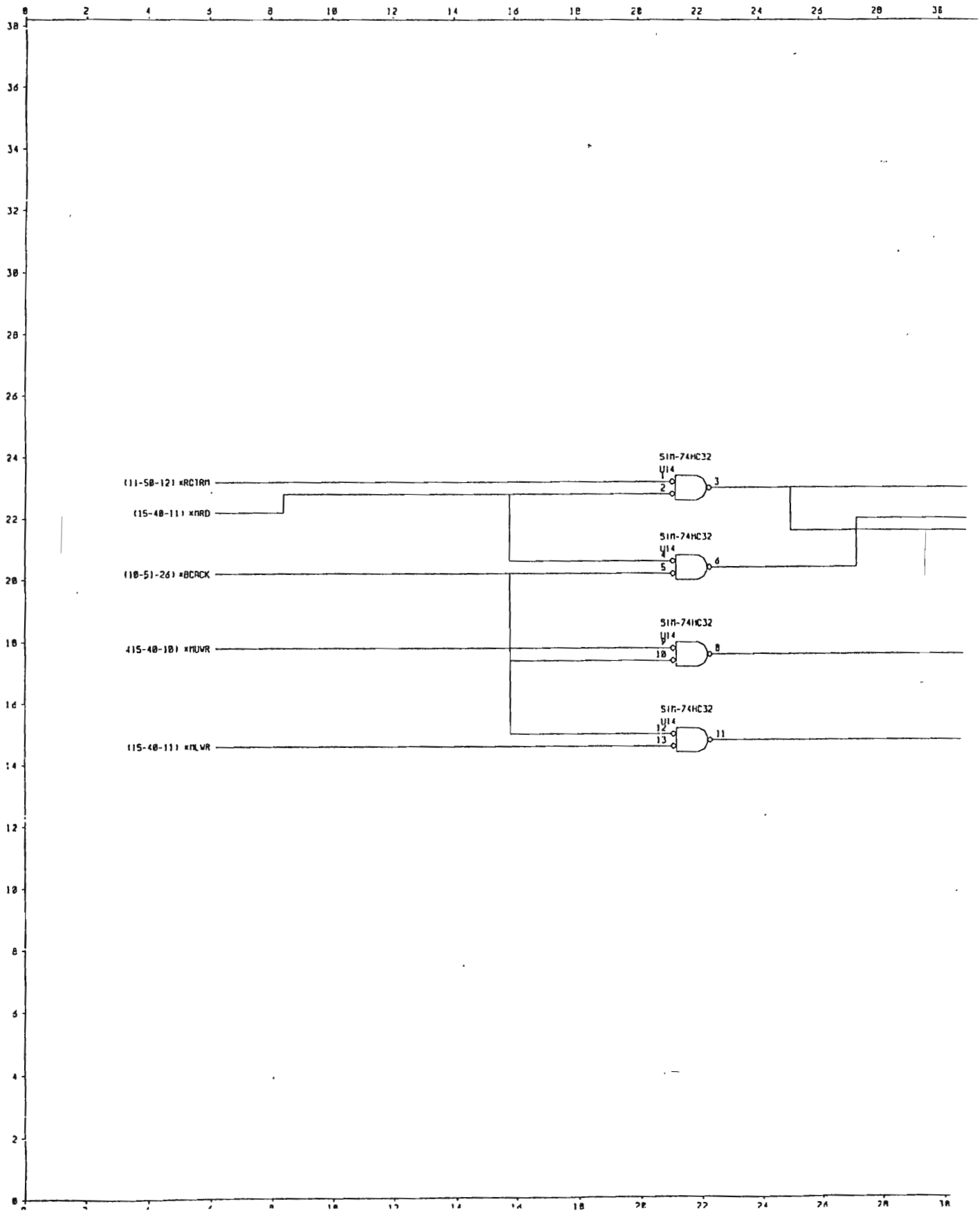
(11-50-12) xRCTRM
(15-40-11) xMRD
(10-51-26) xBCRCK
(15-40-10) xMUVR
(15-40-11) xMLVR
SIM-74HC32
U14
1
2
3
SIM-74HC32
U14
4
5
6
SIM-74HC32
U14
9
10
8
SIM-74HC32
U14
12
13
11

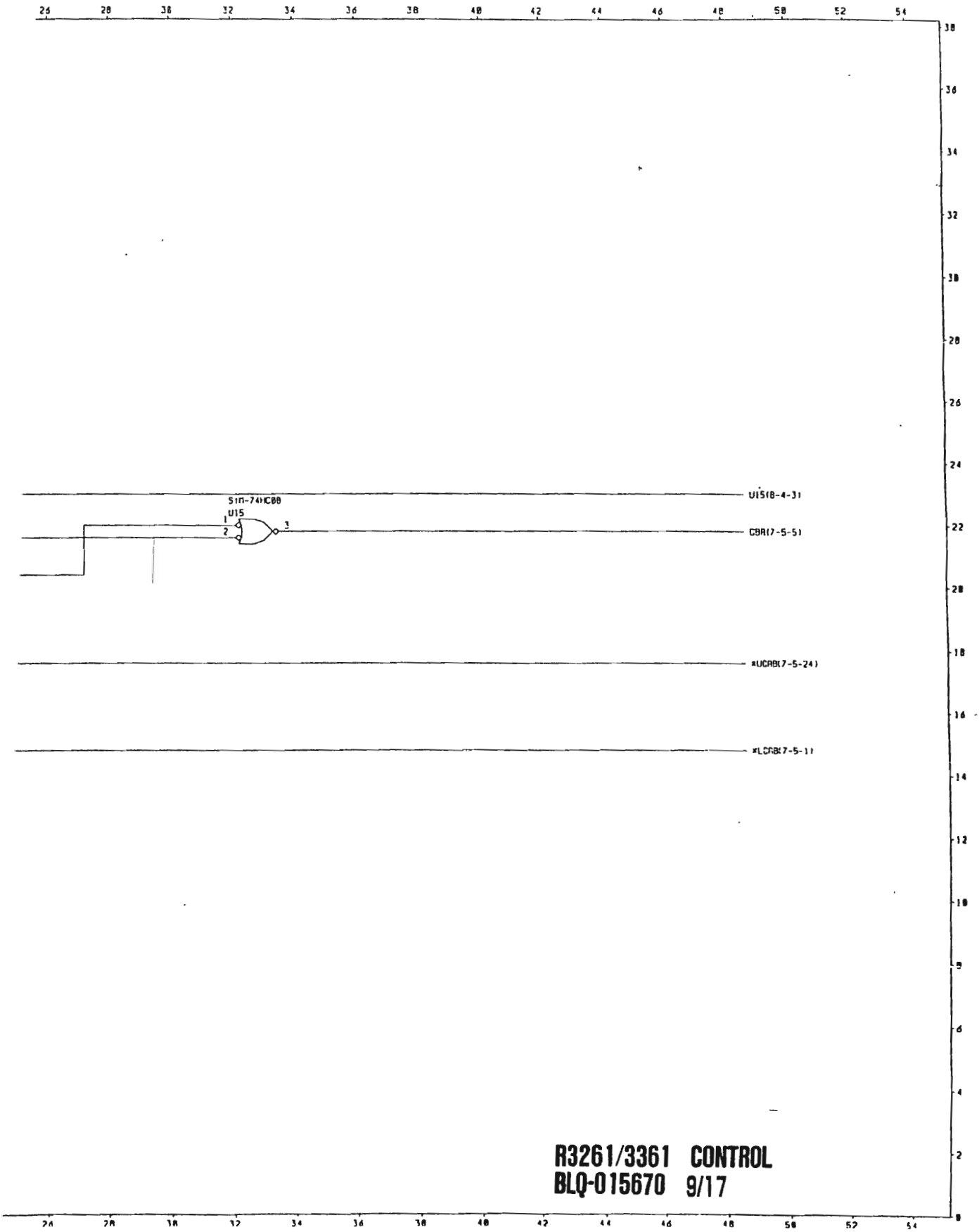

R3261/3361 CONTROL
BLQ-015670 9/17

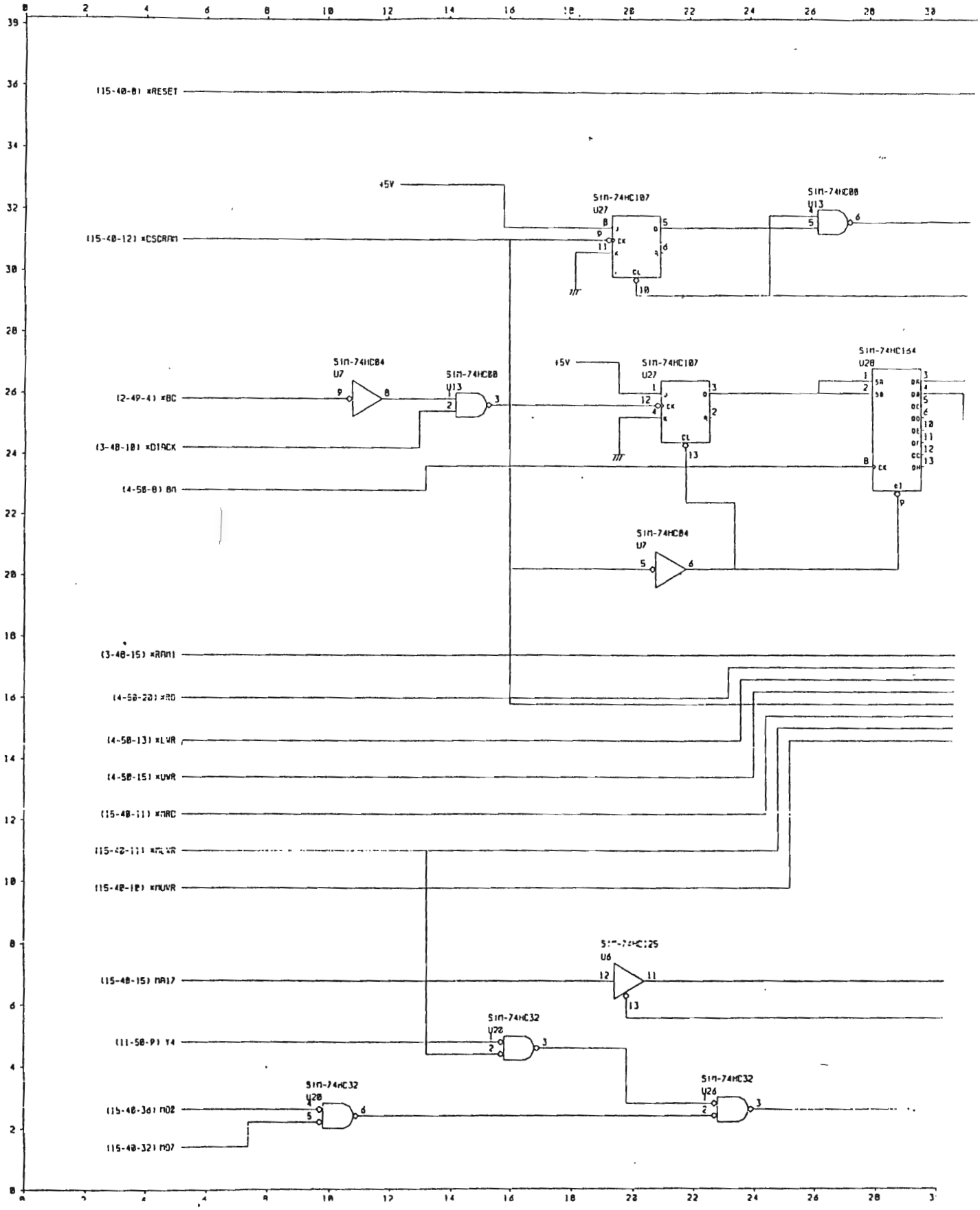
(15-40-8) xRESET
+5V
SIM-74HC107
U27
SIM-74HC08
U13
(15-40-12) xCSCRAM
SIM-74HC04
U7
SIM-74HC08
U13
+5V
SIM-74HC107
U27
SIM-74HC154
U28
(2-49-4) xBC
(3-48-18) xDIACK
(4-50-8) BA
SIM-74HC04
U7
(3-48-15) xRAM1
(4-50-20) xRD
(4-50-13) xLWR
(4-50-15) xUWR
(15-48-11) xMRD
(15-48-11) xMLWR
(15-48-12) xMUWR
SIM-74HC125
U6
(15-48-15) MA17
SIM-74HC32
U22
(11-50-9) Y4
SIM-74HC32
U20
SIM-74HC32
U26
(15-48-36) MD2
(15-48-32) MD7

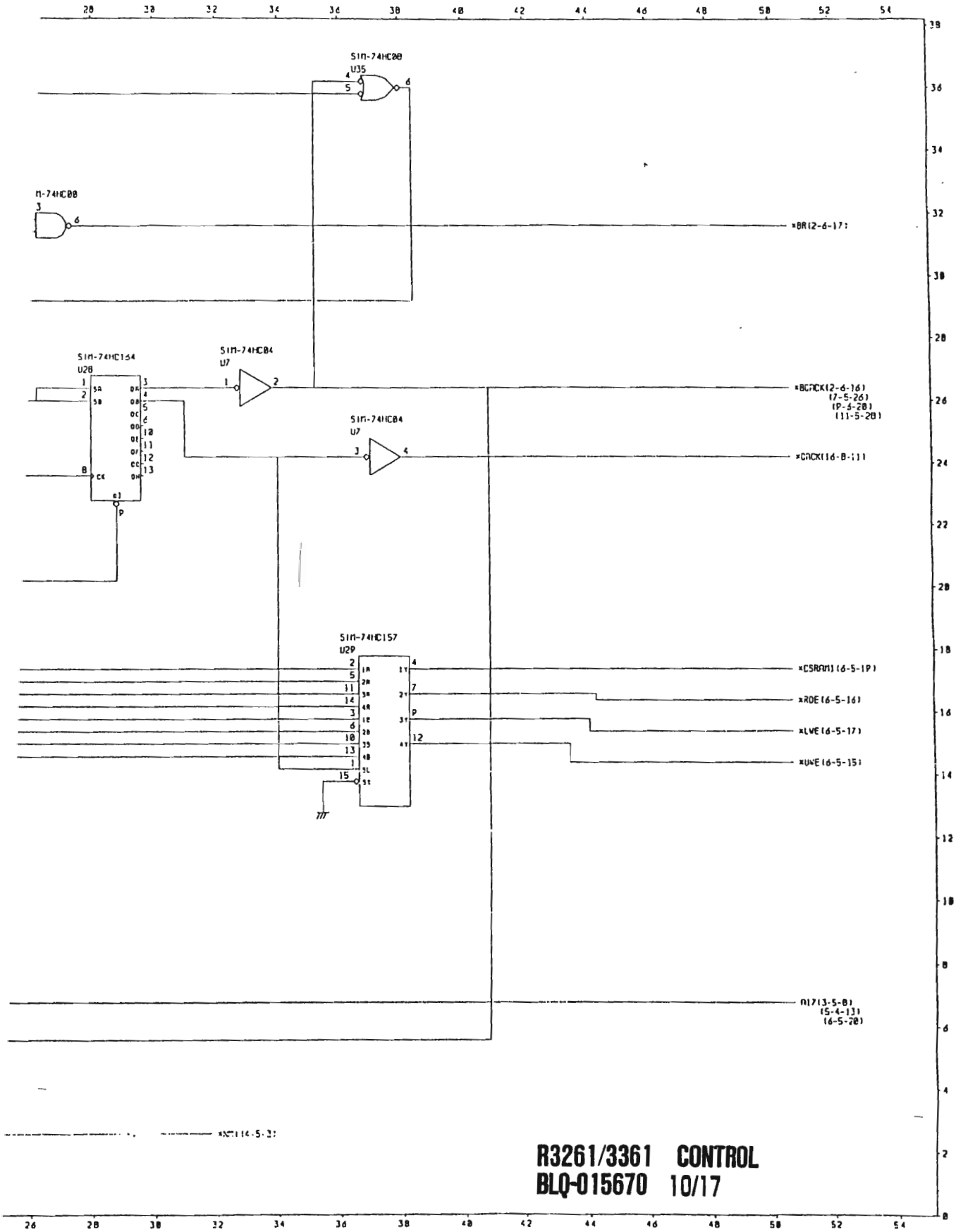

R3261/3361 CONTROL
BLQ-015670 10/17

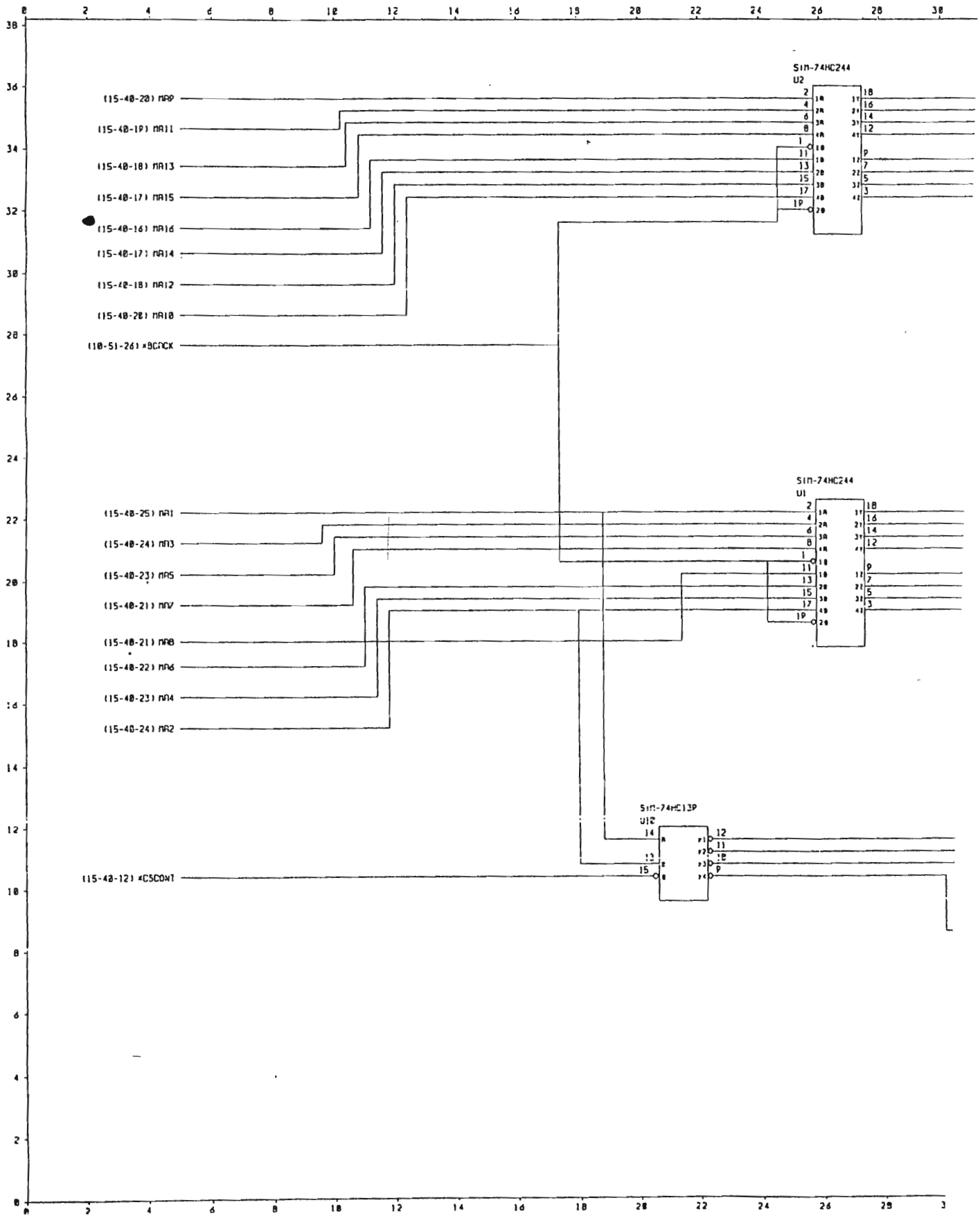
SIM-74HC244
U2
(15-40-20) MA9
(15-40-19) MA11
(15-40-18) MA13
(15-40-17) MA15
(15-40-16) MA16
(15-40-17) MA14
(15-40-18) MA12
(15-40-20) MA10
(10-51-26) *BCACK
SIM-74HC244
U1
(15-40-25) MA1
(15-40-24) MA3
(15-40-23) MA5
(15-40-21) MA7
(15-40-21) MA8
(15-40-22) MA6
(15-40-23) MA4
(15-40-24) MA2
SIM-74HC13P
U12
(15-40-12) *CSCONT

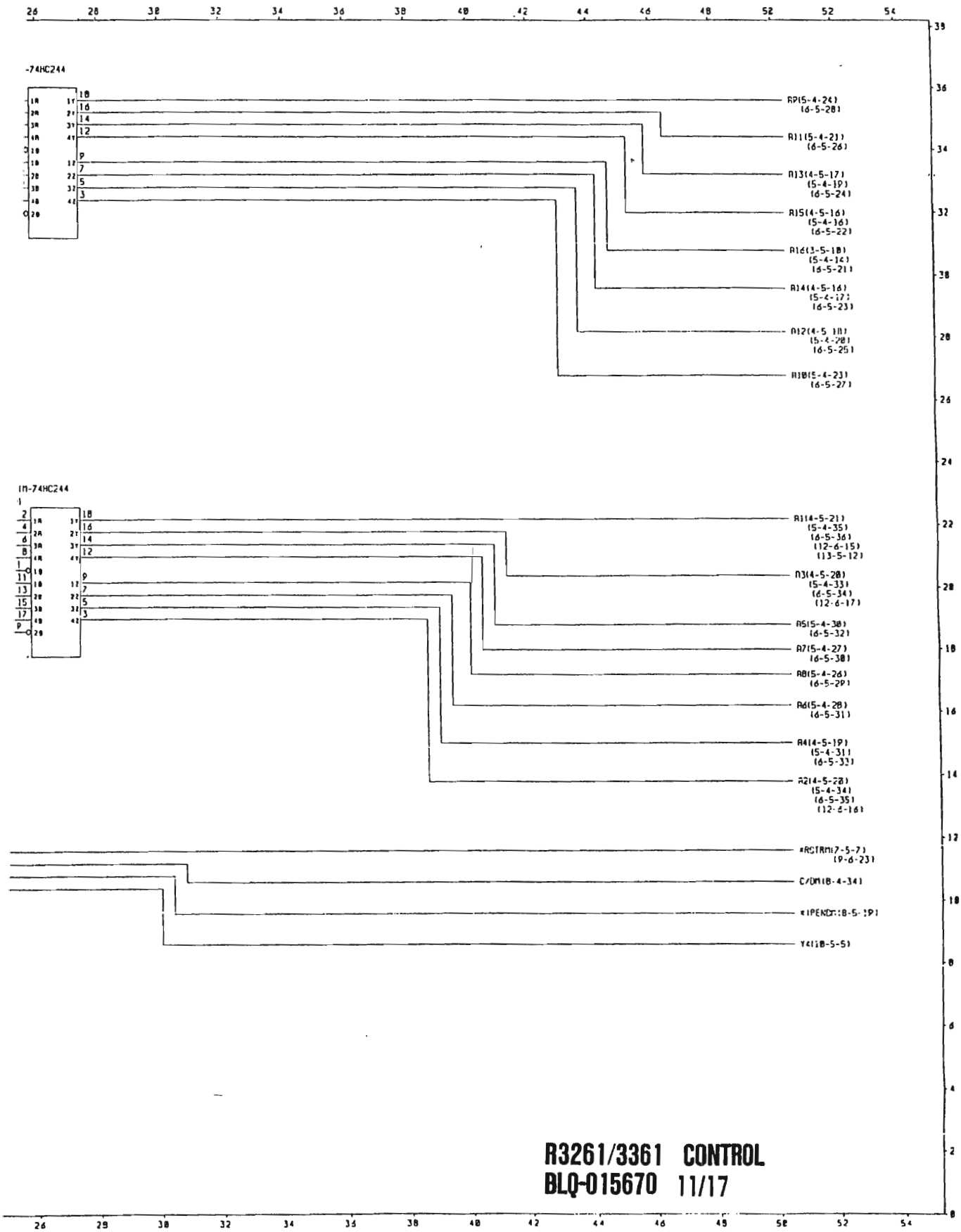

R3261/3361 CONTROL
BLQ-015670 11/17

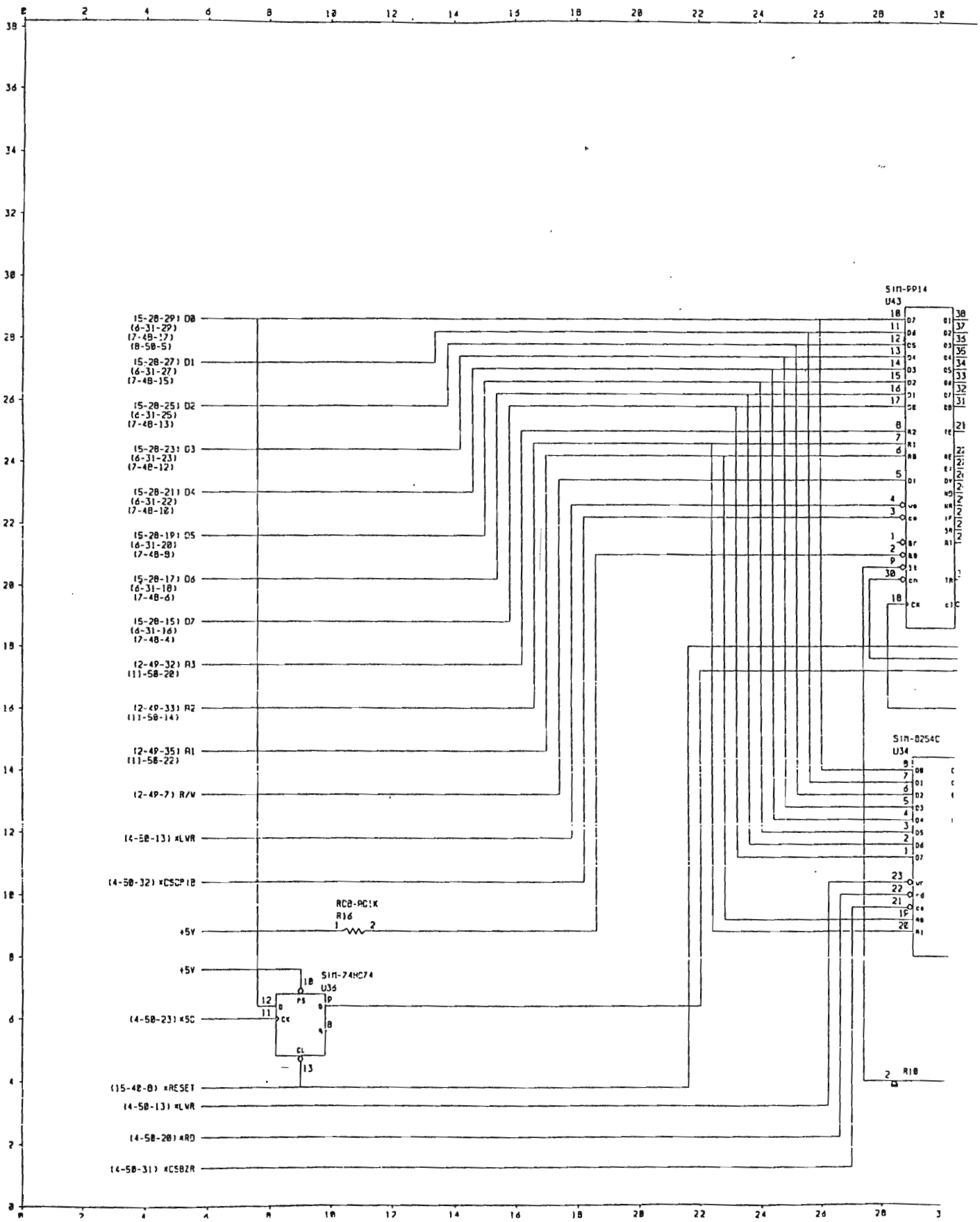
SIM-PPI4
U43
SIM-8254C
U34
SIM-74HC74
U36
RC8-RC1K
R16
R18
(15-28-29) D0
(6-31-29)
(7-48-17)
(8-50-5)
(15-28-27) D1
(6-31-27)
(7-48-15)
(15-28-25) D2
(6-31-25)
(7-48-13)
(15-28-23) D3
(6-31-23)
(7-48-12)
(15-28-21) D4
(6-31-22)
(7-48-10)
(15-28-19) D5
(6-31-20)
(7-48-9)
(15-28-17) D6
(6-31-18)
(7-48-6)
(15-28-15) D7
(6-31-16)
(7-48-4)
(2-49-32) A3
(11-58-20)
(2-49-33) A2
(11-58-14)
(2-49-35) A1
(11-58-22)
(2-49-7) R/W
(4-58-13) xLWR
(4-58-32) xCSCP1B
+5V
+5V
(4-58-23) xSC
(15-42-8) xRESET
(4-58-13) xLWR
(4-58-20) xRD
(4-58-31) xCSBZR

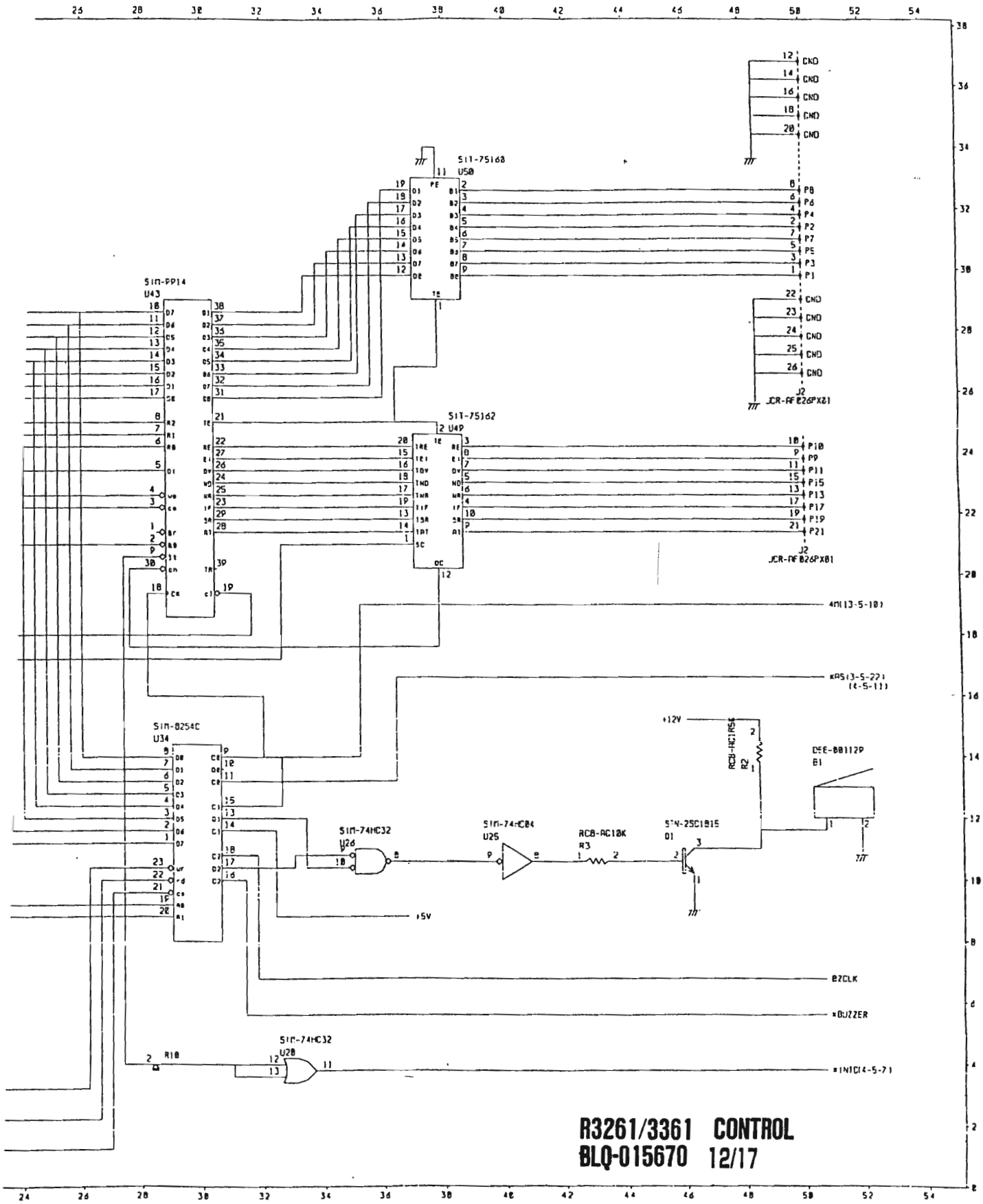

R3261/3361 CONTROL
BLQ-015670 12/17

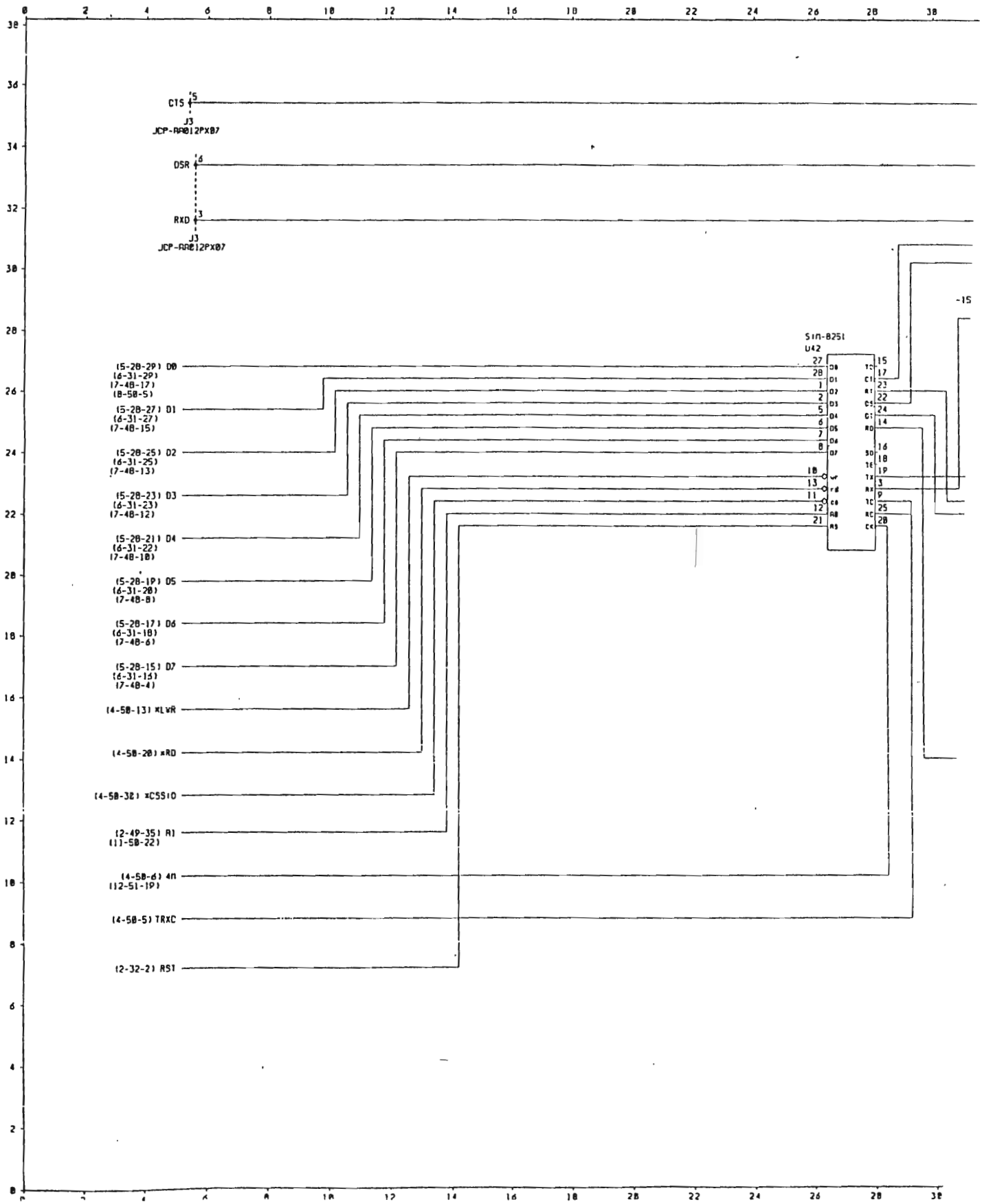
CTS
J3
JCP-AA012PX07
DSR
RXD
J3
JCP-AA012PX07
Sim-8251
U42
(5-28-29) D0
(6-31-29)
(7-48-17)
(8-50-5)
(5-28-27) D1
(6-31-27)
(7-48-15)
(5-28-25) D2
(6-31-25)
(7-48-13)
(5-28-23) D3
(6-31-23)
(7-48-12)
(5-28-21) D4
(6-31-22)
(7-48-10)
(5-28-19) D5
(6-31-20)
(7-48-8)
(5-28-17) D6
(6-31-18)
(7-48-6)
(5-28-15) D7
(6-31-16)
(7-48-4)
(4-50-13) xLWR
(4-50-20) xRD
(4-50-32) xCSSIO
(2-49-35) RI
(11-50-22)
(4-50-6) 4M
(12-51-19)
(4-50-5) TRXC
(2-32-2) RST

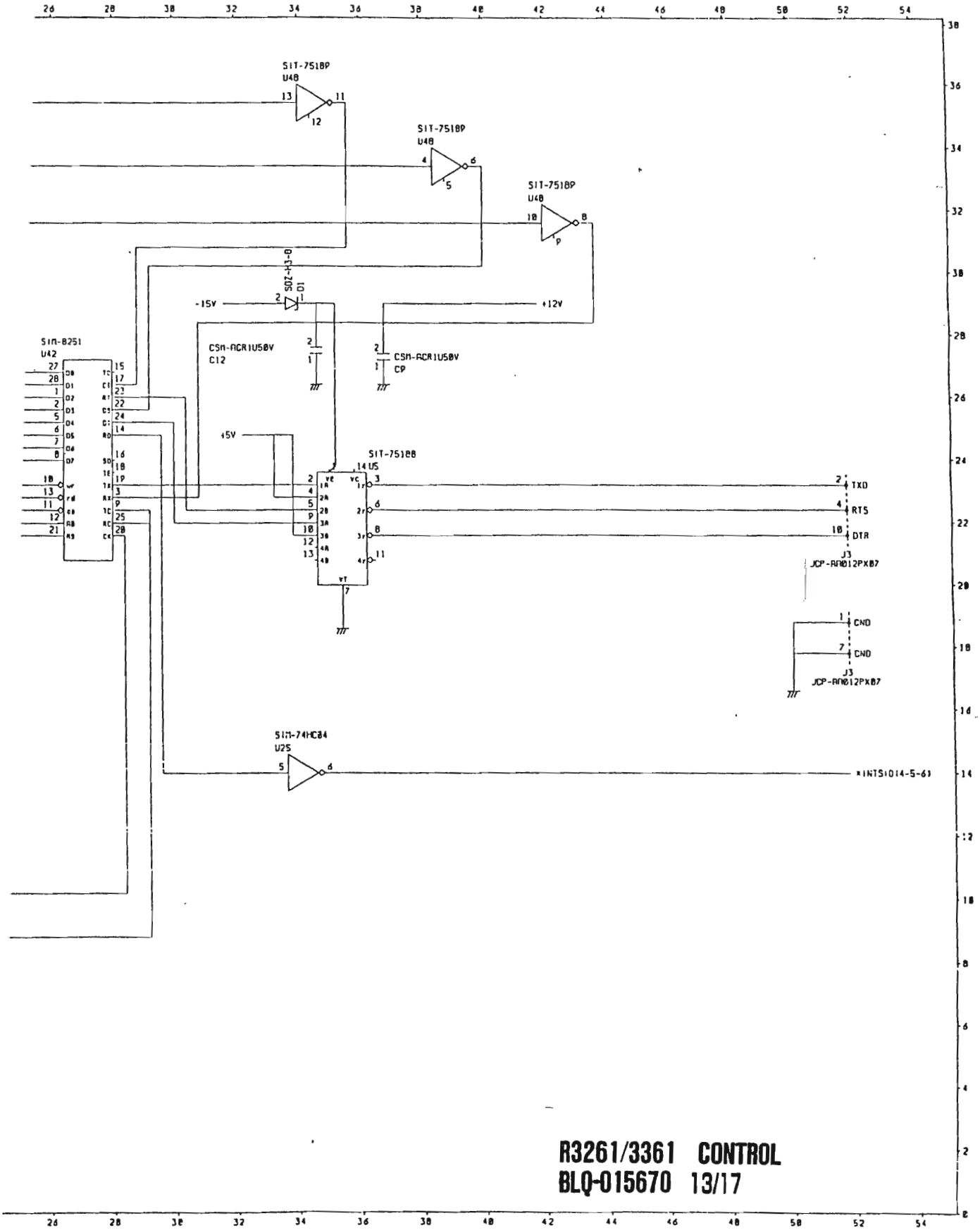

R3261/3361 CONTROL
BLQ-015670 13/17

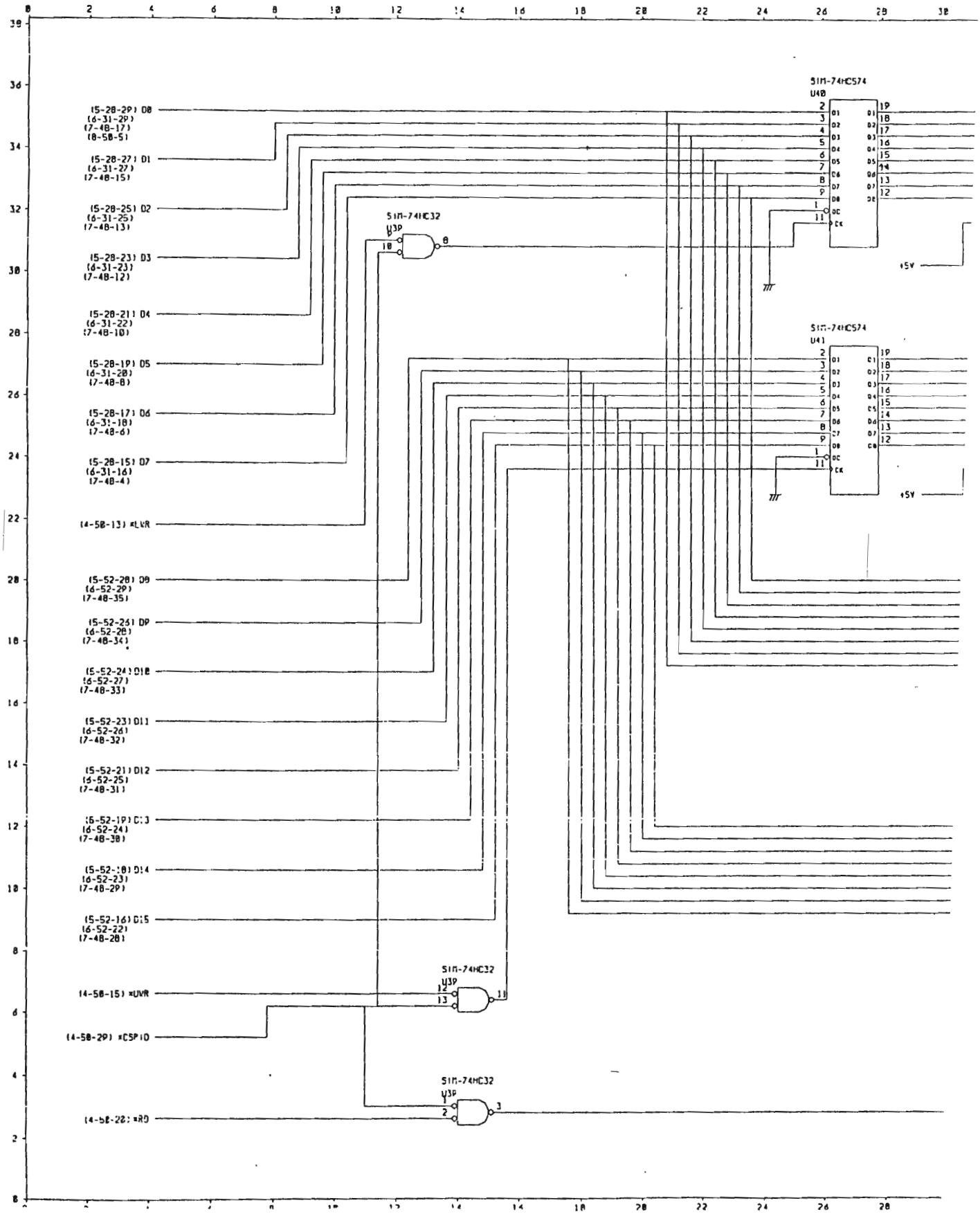
SIM-74HC574
U40
SIM-74HC574
U41
SIM-74HC32
U39
SIM-74HC32
U39
SIM-74HC32
U39
+5V
+5V
(5-28-29) D0
(6-31-29)
(7-48-17)
(8-58-5)
(5-28-27) D1
(6-31-27)
(7-48-15)
(5-28-25) D2
(6-31-25)
(7-48-13)
(5-28-23) D3
(6-31-23)
(7-48-12)
(5-28-21) D4
(6-31-22)
(7-48-10)
(5-28-19) D5
(6-31-20)
(7-48-8)
(5-28-17) D6
(6-31-18)
(7-48-6)
(5-28-15) D7
(6-31-16)
(7-48-4)
(4-58-13) *LWR
(5-52-28) D9
(6-52-29)
(7-48-35)
(5-52-26) D9
(6-52-28)
(7-48-34)
(5-52-24) D10
(6-52-27)
(7-48-33)
(5-52-23) D11
(6-52-26)
(7-48-32)
(5-52-21) D12
(6-52-25)
(7-48-31)
(5-52-19) D13
(6-52-24)
(7-48-30)
(5-52-18) D14
(6-52-23)
(7-48-29)
(5-52-16) D15
(6-52-22)
(7-48-28)
(4-58-15) *UWR
(4-58-29) *CSPIO
(4-58-28) *RD

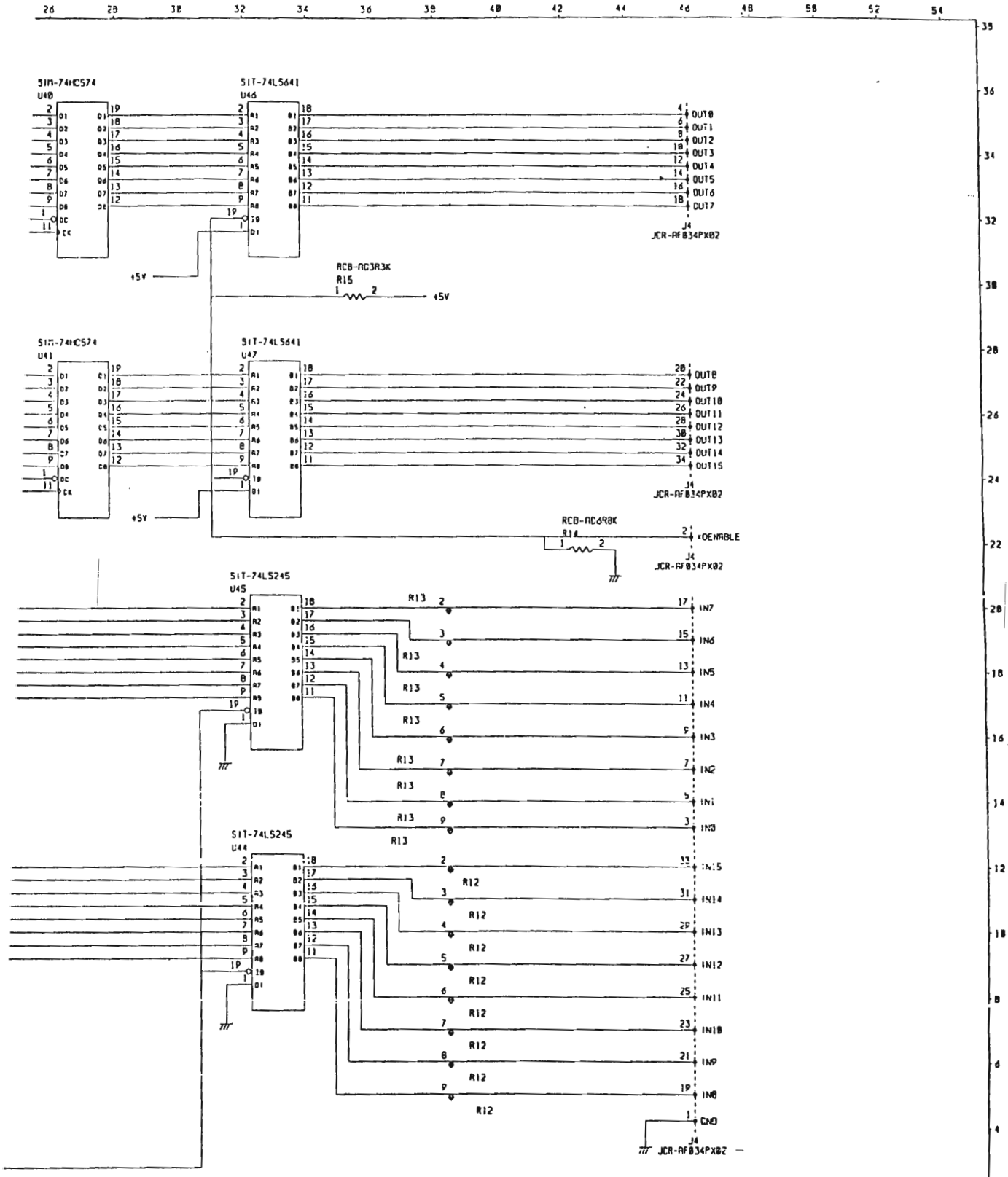

R3261/3361 CONTROL
BLQ-015670 14/17

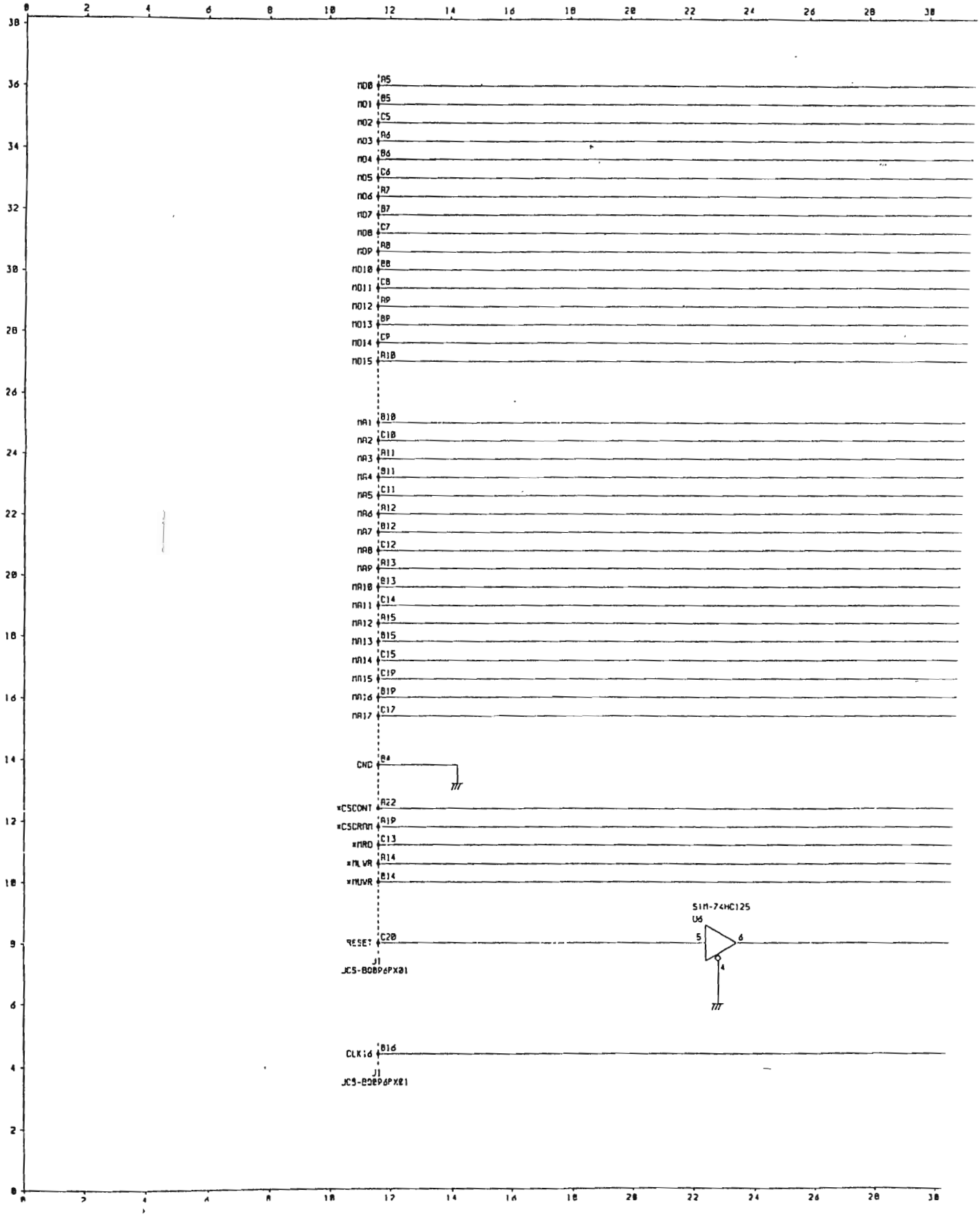
MD0 A5
MD1 B5
MD2 C5
MD3 A6
MD4 B6
MD5 C6
MD6 A7
MD7 B7
MD8 C7
MDP A8
MD10 B8
MD11 C8
MD12 A9
MD13 B9
MD14 C9
MD15 A10
MA1 B10
MA2 C10
MA3 A11
MA4 B11
MA5 C11
MA6 A12
MA7 B12
MA8 C12
MA9 A13
MA10 B13
MA11 C14
MA12 A15
MA13 B15
MA14 C15
MA15 C19
MA16 B19
MA17 C17
GND B4
*CSCONT A22
*CSCRAM A19
*MRD C13
*MLWR A14
*MUWR B14
RESET C20
J1
JCS-B08P6PX01
CLK16 B16
J1
JCS-B08P6PX01
SN-74HC125
U6
5
6
4

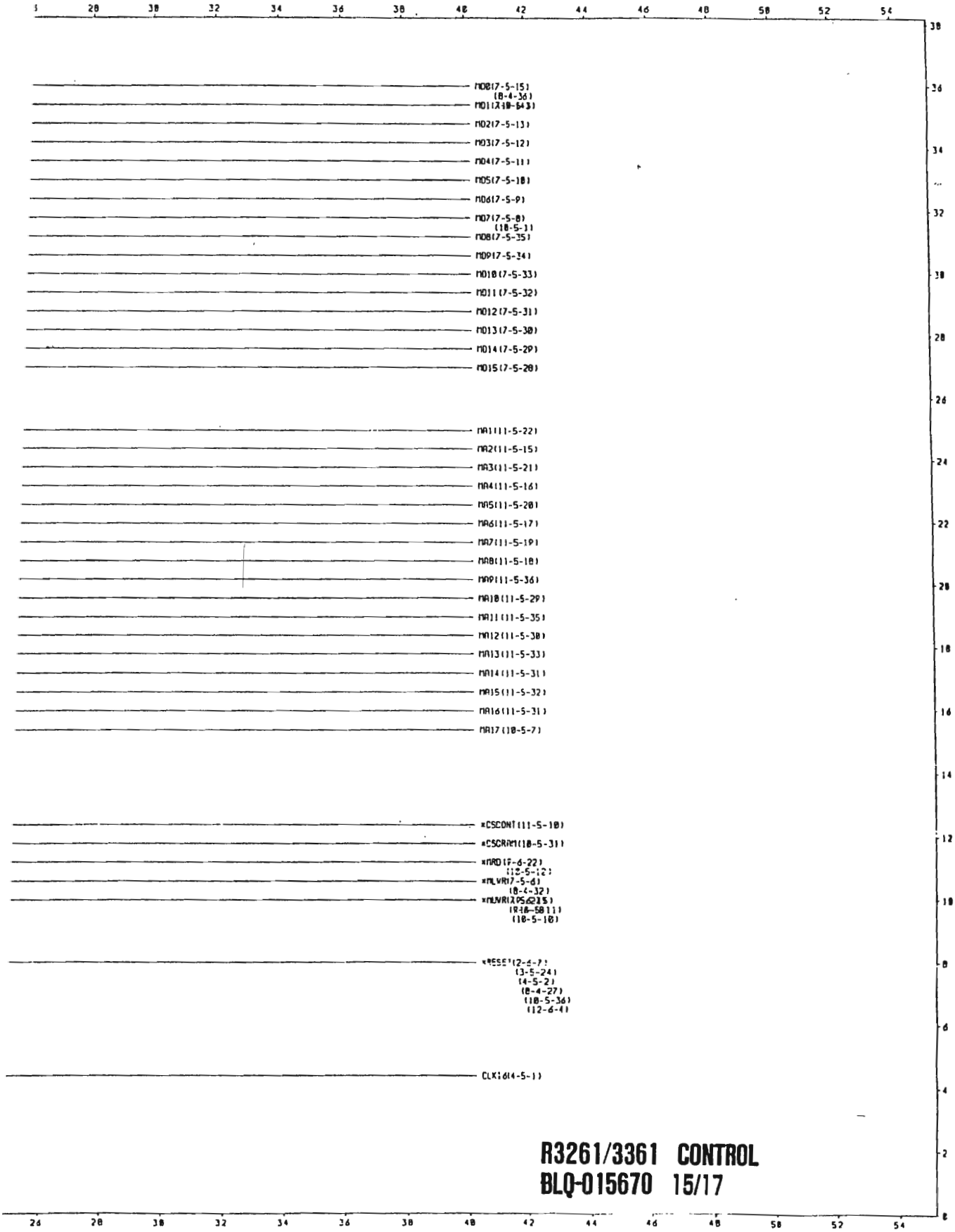

R3261/3361 CONTROL
BLQ-015670 15/17

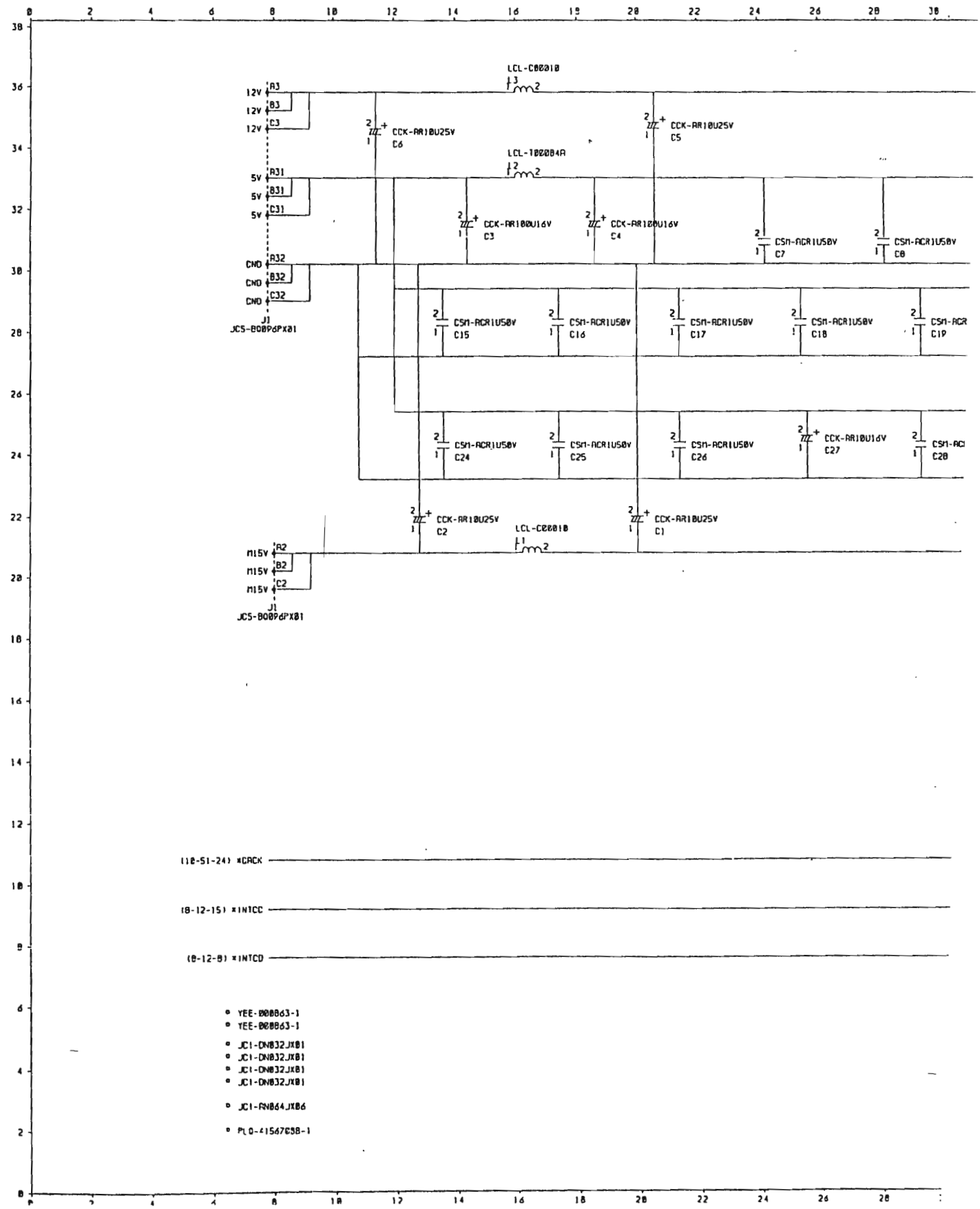
LCL-C00010
12V A3
12V B3
12V C3
CCK-AR10U25V C6
CCK-AR10U25V C5
LCL-100004A
5V A31
5V B31
5V C31
CCK-AR100U16V C3
CCK-AR100U16V C4
CSM-ACR1U50V C7
CSM-ACR1U50V C8
GND A32
GND B32
GND C32
J1
JCS-B00P6PX01
CSM-ACR1U50V C15
CSM-ACR1U50V C16
CSM-ACR1U50V C17
CSM-ACR1U50V C18
CSM-ACR1U50V C24
CSM-ACR1U50V C25
CSM-ACR1U50V C26
CCK-AR10U16V C27
CCK-AR10U25V C2
LCL-C00010
CCK-AR10U25V C1
M15V A2
M15V B2
M15V C2
J1
JCS-B00P6PX01
(10-51-24) *CACK
(8-12-15) *INTCC
(8-12-8) *INTCD
YEE-000863-1
YEE-000863-1
JC1-DN032JX01
JC1-DN032JX01
JC1-DN032JX01
JC1-DN032JX01
JC1-RN064JX06
PLO-41567C58-1

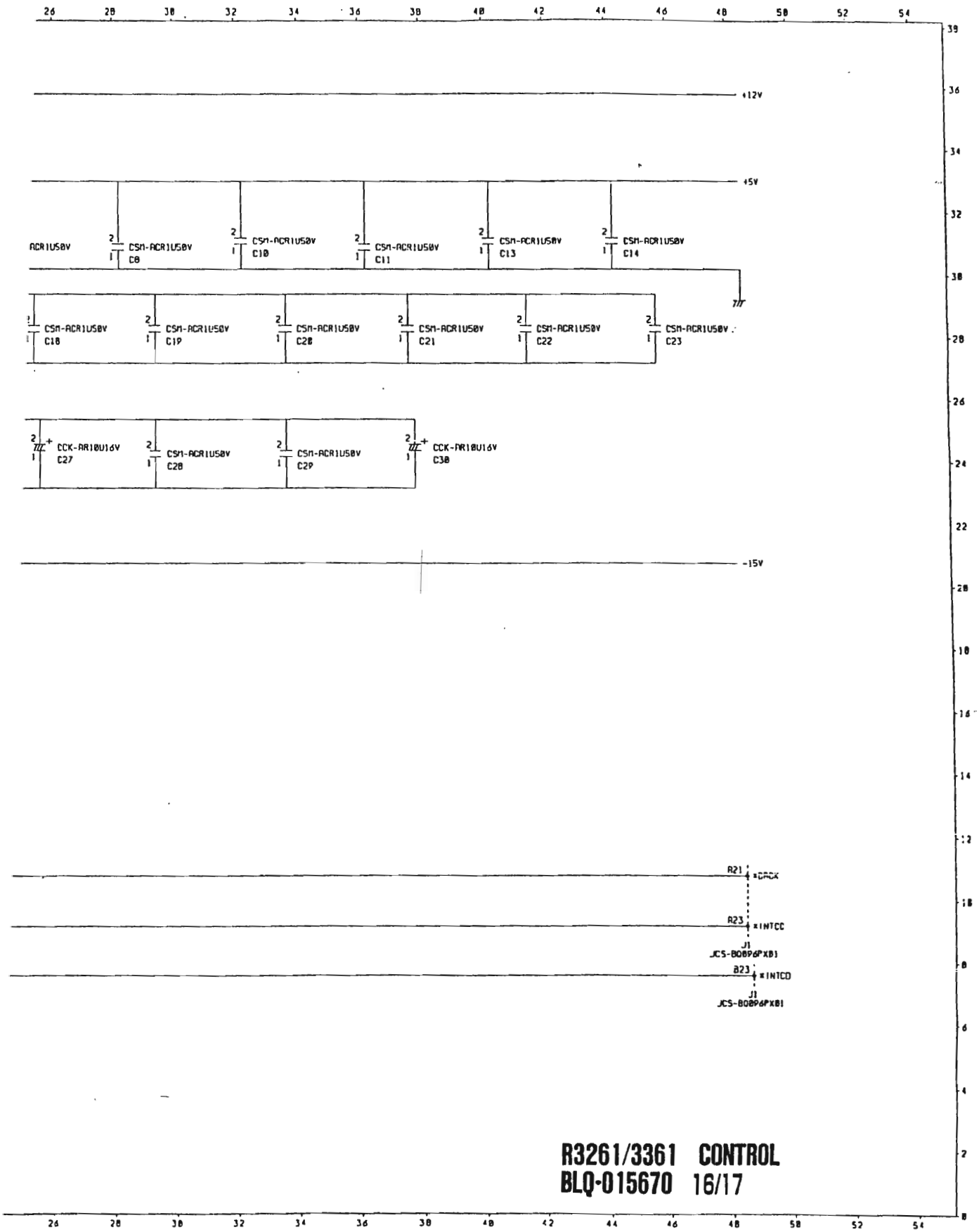

R3261/3361 CONTROL
BLQ-015670 16/17

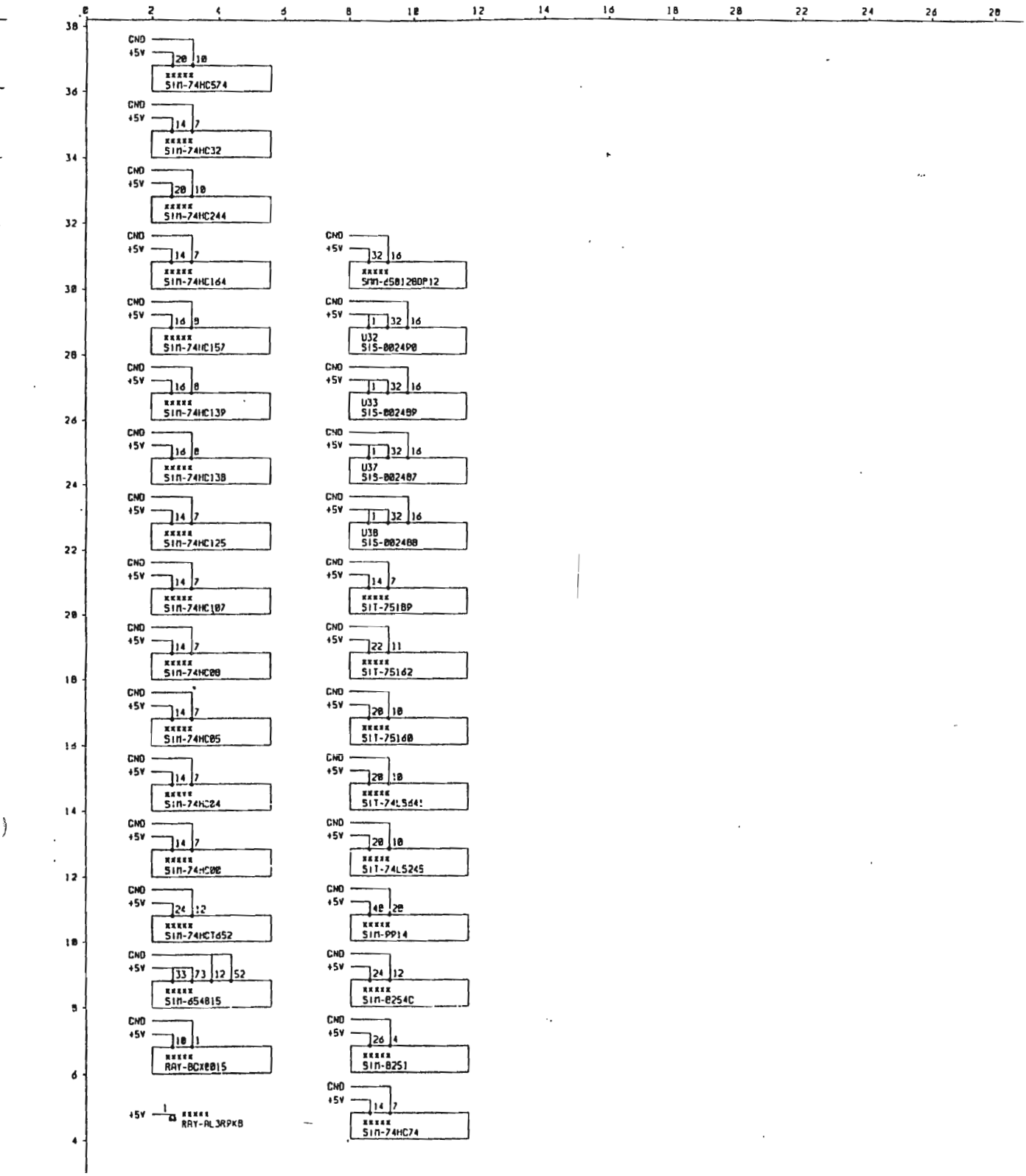

R3261/3361 CONTROL
BLQ-015670 17/17

R3261/3361
RF CONT
BLQ-015672 (1/4)

Parts No.	Advantest Stock No.	Description					Note
C1-2	CSM-AGR1U50V	FXD	CER	0.1µF	+80%,-20%	50V	
C6	CSM-AC1000P50V	FXD	CER	1000PF	±10%	50V	
C7-8	CTA-AB2R2U35V	FXD	TA	2.2µF	±20%	35V	
C9	CFM-AHR1U100V-1	FXD	FILM	0.1µF	±10%	100V	
C10	CFM-ASR022U50V	FXD	FILM	0.022µF	±10%	50V	
C11	CSM-AGR1U50V	FXD	CER	0.1µF	+80%,-20%	50V	
C12	CFM-ASR033U50V	FXD	FILM	0.033µF	±10%	50V	
C13-14	CTA-AB2R2U35V	FXD	TA	2.2µF	±20%	35V	
C15-18	CSM-AGR1U50V	FXD	CER	0.1µF	+80%,-20%	50V	
C19	CSM-BA2200P50V	FXD	CER	2200PF	±5%	50V	
C20-21	CSM-AGR1U50V	FXD	CER	0.1µF	+80%,-20%	50V	
C22	CCK-AR100U16V	FXD	ELECT	100µF	±20%	16V	
C23-24	CTA-AB2R2U35V	FXD	TA	2.2µF	±20%	35V	
C25	CTA-ABR47U35V	FXD	TA	0.47µF	±20%	50V	
C26	CTA-AC1U50V	FXD	TA	1µF	±20%	50V	
C27	CTA-AB2R2U35V	FXD	TA	2.2µF	±20%	35V	
C28	CSM-AGR1U50V	FXD	CER	0.1µF	+80%,-20%	50V	
C29-34	CTA-AB2R2U35V	FXD	TA	2.2µF	±20%	35V	
C35-39	CSM-AGR1U50V	FXD	CER	0.1µF	±20%	50V	
C40-41	CTA-AC3R3U16V	FXD	TA	3.3µF	±20%	16V	
C42	CCK-AR100U10V	FXD	ELECT	100µF	±20%	10V	
C43-44	CTA-AC3R3U16V	FXD	TA	3.3µF	±20%	16V	
C45-46	CCK-AR47U25V	FXD	ELCT	47µF	±20%	25V	
C47	CCK-AR47U25V	FXD	ELECT	47µF	±20%	25V	
C48	CCK-BX47U25V	FXD	ELECT	47µF	±20%	25V	
C49	CSM-AC33P50V	FXD	CER	33PF	±10%	50V	
C51	CSM-BA330P50V	FXD	CER	330PF	±5%	50V	
D2	SDS-1S953	DIODE SI					
D3	SDZ-W130	ZENER	DIODE				
D4	SDZ-2-2	ZENER	DIODE				
D7	SDS-1SS101	DIODE SI					
D8	SDZ-D030	ZENER	DIODE				
J1	JCS-BQ096PX01	CONNECTOR					
J2	JCR-AF026PX02	CONNECTOR					
J3	JCS-AD010PX02	CONNECTOR					
L1-3	LCL-C00013	COIL	(CUSTOM	DEVICE)			
L4	LCL-C00358	COIL	(CUSTOM	DEVICE)			
Q2	STP-2SA642-33	TRANSISTOR	PNP				
Q3	STN-2SC1815-55	TRANSISTOR	NPN				
Q4	STP-2SA642-33	TRANSISTOR	PNP				
Q5	STN-2SC815-2	TRANSISTOR	NPN				
Q6	STP-2SA1015	TRANSISTOR	PNP				
R1	RCB-AG820K	FXD	CAR	820KΩ	±5%	1/8W	
R2-3	RMF-AC10KFJ	FXD	FILM	10KΩ	±1%	1/4W	
R22	RVR-CD2K	VAR	CERMET	2KΩ	±20%	1/2W	
R23	RMF-AC19R1KFJ	FXD	METAL	19.1KΩ	±1%	1/4W	
R24	RMF-AC10KFJ	FXD	METAL	10KΩ	±1%	1/4W	

R3261/3361
RF CONT
BLQ-015672 (2/4)

Parts No.	Advantest Stock No.	Description					Note
R25	RMF-AC1KFJ	FXD	METAL	1KΩ	±1%	1/4W	
R26	RMF-AC110QFJ	FXD	METAL	110Ω	±1%	1/4W	
R27-28	RCB-AG1R5K	FXD	CAR	1.5KΩ	±5%	1/8W	
R29	RMF-AC10KFJ	FXD	METAL	10KΩ	±1%	1/4W	
R30	RMF-AC3R3KFJ	FXD	METAL	3.3KΩ	±1%	1/4W	
R31	RMF-AB5KFG	FXD	METAL	5KΩ	±1%	1/4W	
R32	RVR-BE2K	VAR		2KΩ	±10%	1/2W	
R33	RMF-AB9R1KFG	FXD	METAL	9.1KΩ	±1%	1/4W	
R34-35	RCB-AG10K	FXD	CAR	10KΩ	±5%	1/8W	
R36	RMF-AC1R2KFJ	FXD	METAL	1.2KΩ	±1%	1/4W	
R37	RCB-AG2R2K	FXD	CAR	2.2KΩ	±5%	1/8W	
R38	RMF-AC4R7KFJ	FXD	METAL	4.7KΩ	±1%	1/4W	
R39	RVR-DF1K	VAR		1KΩ	±20%	1/2W	
R40	RMF-AC3R9KFJ	FXD	METAL	3.9KΩ	±1%	1/4W	
R41	RMF-AC12KFJ	FXD	METAL	12KΩ	±1%	1/4W	
R42-43	RMF-AC10KFJ	FXD	METAL	10KΩ	±1%	1/4W	
R44	RMF-AC3R3KFJ	FXD	METAL	3.3KΩ	±1%	1/4W	
R45-46	RMF-AC10KFJ	FXD	METAL	10KΩ	±1%	1/4W	
R47	RCB-AG10K	FXD	CAR	10KΩ	±5%	1/8W	
R48	RCB-AG3R3K	FXD	CAR	3.3KΩ	±5%	1/8W	
R49	RCB-AG220	FXD	CAR	220Ω	±5%	1/8W	
R50	RCB-AG10K	FXD	CAR	10KΩ	±5%	1/8W	
R51	RMF-AC10KFJ	FXD	METAL	10KΩ	±1%	1/4W	
R52	RMF-AC8R2KFJ	FXD	METAL	8.2KΩ	±1%	1/4W	
R53	RVR-CD10K	VAR	CERMET	10KΩ	±20%	1/2W	
R54	RCB-AG220	FXD	CAR	220Ω	±5%	1/8W	
R55	RMF-AC12KFJ	FXD	METAL	12KΩ	±1%	1/4W	
R56	RMF-AC14KFG	FXD	METAL	14KΩ	±1%	1/4W	
R57	RVR-CD5K	VAR	CERMET	5KΩ	±20%	1/2W	
R58	RCB-AG820K	FXD	CAR	820KΩ	±5%	1/8W	
R59	RMF-AC27KFJ	FXD	METAL	27KΩ	±1%	1/4W	
R60-61	RMF-AC4R7KFJ	FXD	METAL	4.7KΩ	±1%	1/4W	
R62	RMF-AC470KFJ	FXD	METAL	470KΩ	±1%	1/4W	
R63	RCB-AG1M	FXD	CAR	1MΩ	±5%	1/8W	
R64	RCB-AG560K	FXD	CAR	560KΩ	±5%	1/8W	
R65	RVR-CD10K	VAR	CERMET	10KΩ	±20%	1/2W	
R66	RMF-AC12KFJ	FXD	METAL	12KΩ	±1%	1/4W	
R67	RMF-AC10KFJ	FXD	METAL	10KΩ	±1%	1/4W	
R68	RCB-AG1K	FXD	CAR	1KΩ	±5%	1/8W	
R69	RCB-AG18K	FXD	CAR	18KΩ	±5%	1/8W	
R70	RCB-AG5R6K	FXD	CAR	5.6KΩ	±5%	1/8W	
R71	RCB-AG10K	FXD	CAR	10KΩ	±5%	1/8W	
R72	RMF-AC33KFJ	FXD	METAL	33KΩ	±1%	1/4W	
R73	RMF-AC680KFJ	FXD	METAL	680KΩ	±1%	1/4W	
R74	RCB-AG10K	FXD	CAR	10KΩ	±5%	1/8W	
R75	RVR-CD50K	VAR	CERMET	50KΩ	±20%	1/2W	
R76	RCB-AG3R3K	FXD	CAR	3.3KΩ	±1%	1/8W	
R77	RCB-AG15K	FXD	CAR	15KΩ	±5%	1/8W	
R78	RCB-AG10K	FXD	CAR	10KΩ	±5%	1/8W	
R79	RCB-AG1K	FXD	CAR	1KΩ	±5%	1/8W	
R80	RVR-BD2K	VAR		2KΩ	±10%	1/2W	
R81	RMF-AB8R2KFG	FXD	METAL	8.2KΩ	±1%	1/4W	

R3261/3361
RF CONT
BLQ-015672 (3/4)

Parts No.	Advantest Stock No.	Description					Note
R82	RMF-AB5R6KFG	FXD	METAL	5.6KΩ	±1%	1/4W	
R83	RMF-AC1R2KFJ	FXD	METAL	1.2KΩ	±1%	1/4W	
R84	RVR-CD20K	VAR	CERMET	20KΩ	±20%	1/2W	
R85	RMF-AC39KFJ	FXD	METAL	39KΩ	±1%	1/4W	
R86	RMF-AC27KFJ	FXD	METAL	27KΩ	±1%	1/4W	
R87	RMF-AC18QFJ	FXD	METAL	18KΩ	±1%	1/4W	
R88	RVR-CD50K	VAR	CERMET	50KΩ	±20%	1/2W	
R89	RMF-AC100KFJ	FXD	METAL	100KΩ	±1%	1/4W	
R90	RMF-AC3R9KFJ	FXD	METAL	3.9KΩ	±1%	1/4W	
R91	RMF-AC220QFJ	FXD	METAL	220Ω	±1%	1/4W	
R94	RCB-AG47K	FXD	CAR	47KΩ	±5%	1/8W	
R95-96	RCB-AG10K	FXD	CAR	10KΩ	±5%	1/8W	
R97	RMF-AB1KFG	FXD	METAL	1KΩ	±1%	1/4W	
R98	RMF-AC22KFJ	FXD	METAL	22KΩ	±1%	1/4W	
R99	RMF-AC33KFJ	FXD	METAL	33KΩ	±1%	1/4W	
R100	RVR-CD100K	VAR	CERMET	100KΩ	±20%	1/2W	
R101	RMF-AC20KFJ	FXD	METAL	20KΩ	±1%	1/4W	
R102	RMF-AC4R7KFJ	FXD	METAL	4.7KΩ	±1%	1/4W	
R103-105	RMF-AC4R7KFJ	FXD	METAL	4.7KΩ	±1%	1/4W	
U1-2	SIM-74HC138	3 TO 8-LINE DECODERS					
U3	SIM-CXD1095	I/O EXPANDER					
U4	SIM-74HC04	HEX INVERTER					
U5	SIM-74HC32	QUAD 2-INPUT POSI-NOR					
U6	SIT-DN8650	LOW-ACTIVE DRIVERS					
U7	SIA-412-1	OP AMP DUAL LOW DRIFT, LOW OFFSET					
U8-9	SIA-DA7545	12-BIT D/A CONVERTER WITH BUFFER					
U10	SIA-DA7533	10-BIT D/A CONVERTER					
U11	SIA-DA7545	12-BIT D/A CONVERTER WITH BUFFER					
U12	SIA-DA7524	8-BIT D/A CONVERTER WITH BUFFER					
U15	SIA-412-1	OP AMP DUAL LOW DRIFT, LOW OFFSET					
U16	SIA-TL072	OP AMP DUAL LOW NOISE					
U17-18	SIA-412-1	OP AMP DUAL LOW DRIFT, LOW OFFSET					
U19	SIA-DG201-1	QUAD ANALOG SWITCHES					
U20	SIA-412-1	OP AMP DUAL LOW DRIFT, LOW OFFSET					
U21-23	SIA-DG201-1	QUAD ANALOG SWITCHES					
U24	SIA-TL072-1	OP AMP DUAL LOW NOISE					
U25-26	SIA-OP07P	OP AMP LOW OFFSET					
U27	SIA-TL072	OP AMP DUAL LOW NOISE					
U28	SIA-TL072-1	OP AMP LOW NOISE					

R3261/3361
RF CONT
BLQ-015672 (4/4)

Parts No.	Advantest Stock No.	Description	Note
U29	SIA-OP07P	OP AMP LOW OFFSET	
U30	SIA-TL072-1	OP AMP DUAL LOW NOISE	
U31	SIA-OP27GD-2	OP AMP LOW OFFSET	
U32	SIA-412-1	OP AMP DUAL LOW DRIFT, LOW OFFSET	
U33	SIA-TL072	OP AMP LOW NOISE	
U34-36	SIM-74HC175	QUAD 8 FLIP-FLOPS	
U37-38	SIM-74HC32	QUAD 2-INPUT POSI-OR	
U39	SIM-74HC04	HEX INVERTER	
U40	SIA-DG201	QUAD ANALOG SWITCHES	

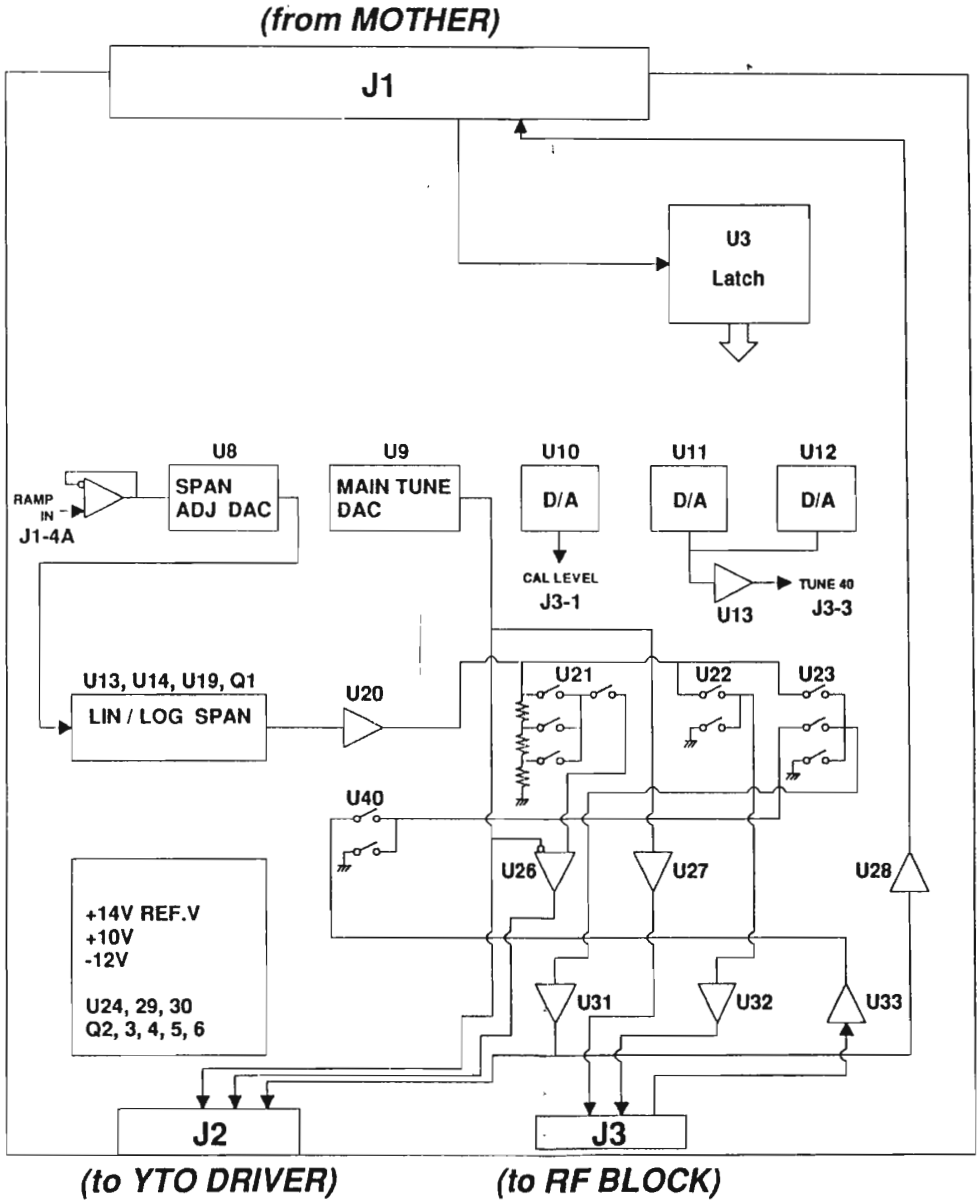

CIRCUIT LAYOUT
RF CONTROL
BLL-015672

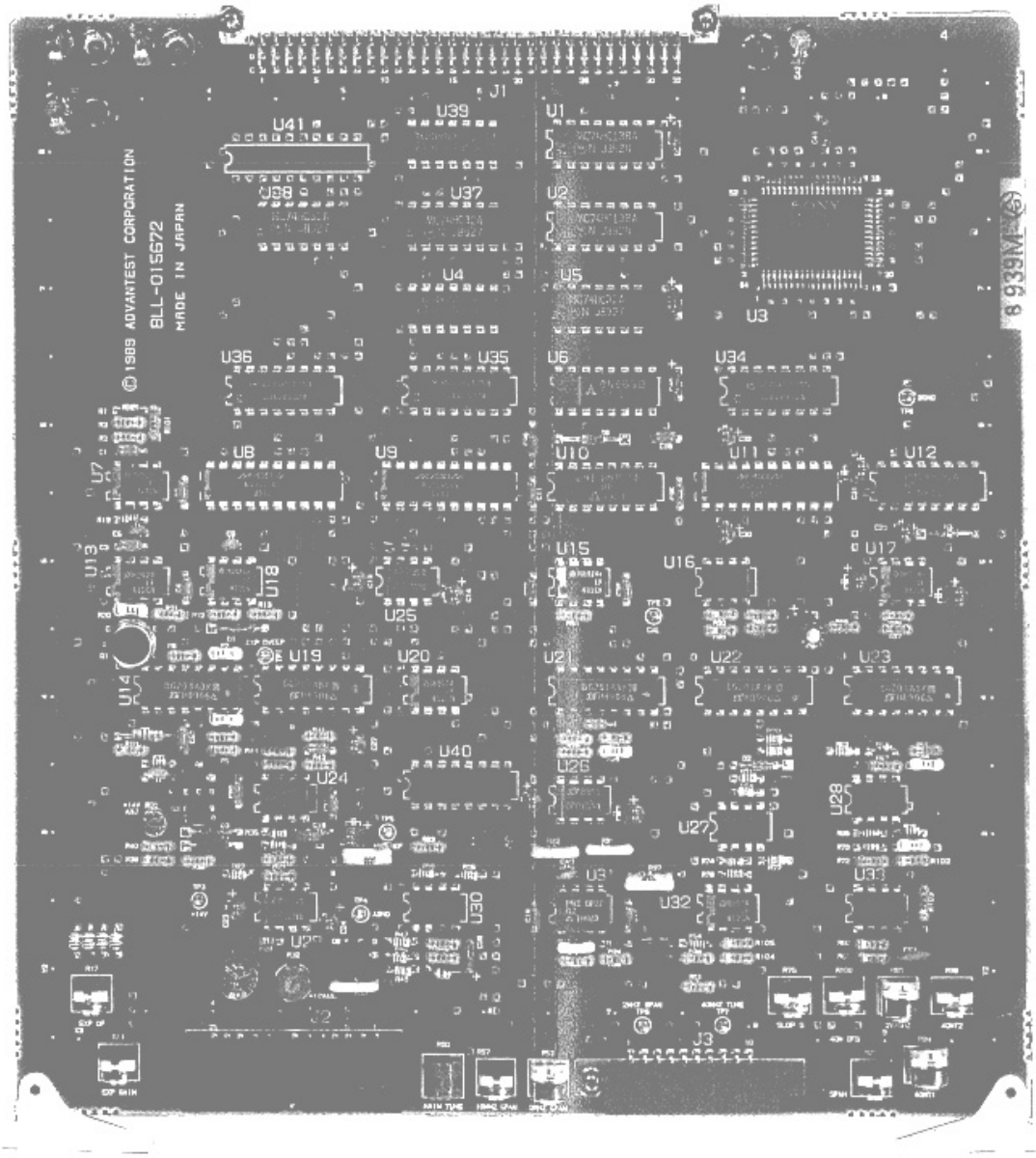

PARTS LOCATION
RF CONTROL
BLL-015672

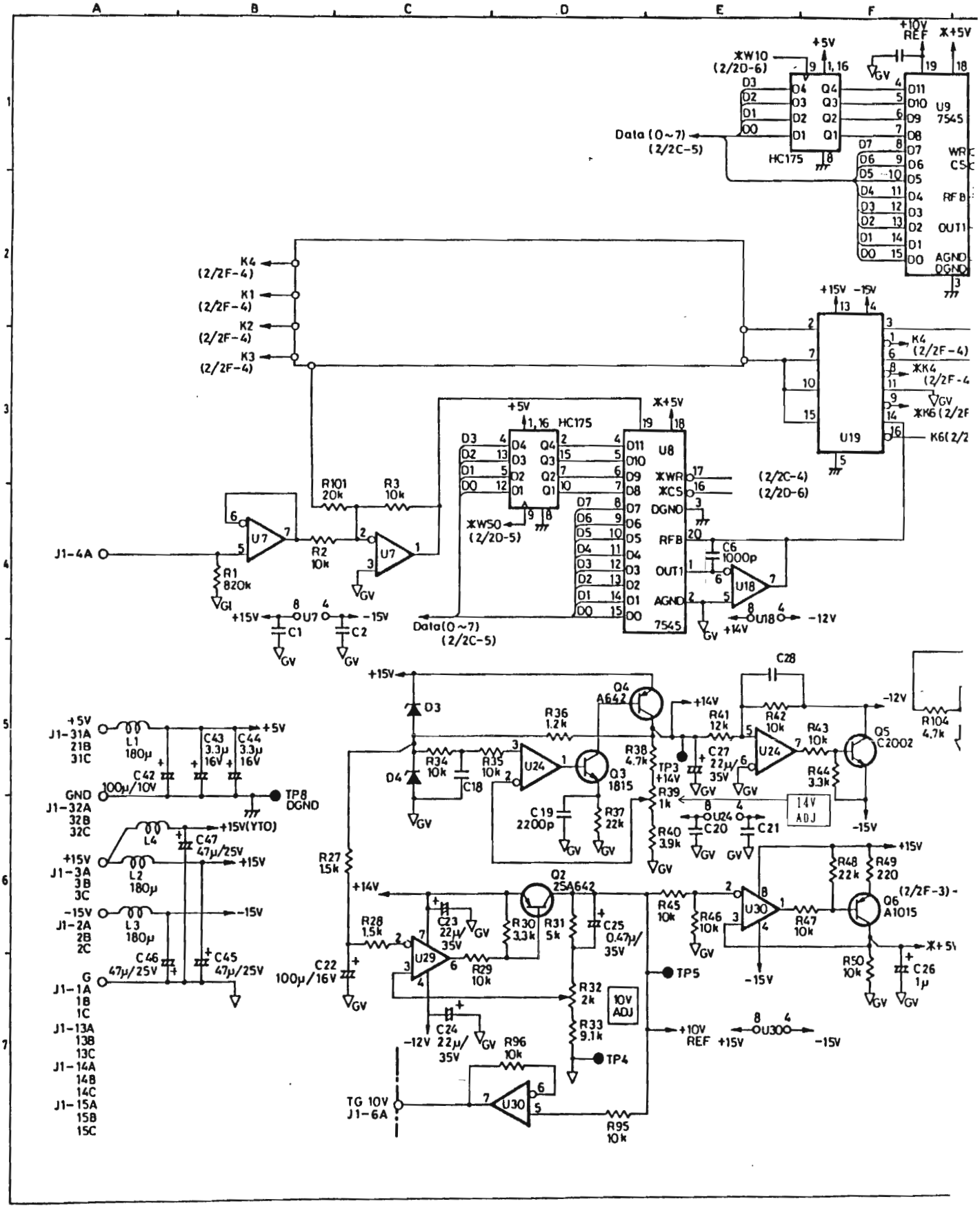
A
B
C
D
E
F
1
2
3
4
5
6
7
+10V REF
*+5V
+5V
*W10 (2/2D-6)
Data (0~7) (2/2C-5)
HC175
U9 7545
WR
CS
RFB
OUT1
AGND
DGND
K4 (2/2F-4)
K1 (2/2F-4)
K2 (2/2F-4)
K3 (2/2F-4)
+15V -15V
U19
*K4 (2/2F-4)
*K6 (2/2F
K6 (2/2
U8
*WR
*CS
DGND
RFB
OUT1
AGND
7545
(2/2C-4)
(2/2D-6)
*WS0 (2/2D-5)
Data(0~7) (2/2C-5)
R101 20k
R3 10k
R2 10k
R1 820k
J1-4A
U7
C1
C2
C6 1000p
U18
+14V
-12V
R104 4.7k
C28
Q4 A642
R36 1.2k
R41 12k
R42 10k
R43 10k
Q5 C2002
R44 3.3k
R34 10k
R35 10k
C18
D3
D4
U24
Q3 1815
R38 4.7k
TP3 +14V
R39 1k
R40 3.9k
C27 22μ/35V
C19 2200p
R37 22k
C20
C21
14V ADJ
R27 1.5k
R28 1.5k
C22 100μ/16V
U29
C23 22μ/35V
R29 10k
C24 22μ/35V
Q2 2SA642
R30 3.3k
R31 5k
C25 0.47μ/35V
R32 2k
10V ADJ
R33 9.1k
TP4
R96 10k
U30
TG 10V J1-6A
R95 10k
R45 10k
R46 10k
R47 10k
R48 22k
R49 220
Q6 A1015
(2/2F-3)
R50 10k
C26 1μ
TP5
+10V REF
+15V
-15V
+5V J1-31A 21B 31C
L1 180μ
C43 3.3μ 16V
C44 3.3μ 16V
C42 100μ/10V
GND J1-32A 32B 32C
TP8 DGND
L4
C47 47μ/25V
+15V(YTO)
+15V J1-3A 3B 3C
L2 180μ
-15V J1-2A 2B 2C
L3 180μ
C46 47μ/25V
C45 47μ/25V
G J1-1A 1B 1C J1-13A 13B 13C J1-14A 14B 14C J1-15A 15B 15C

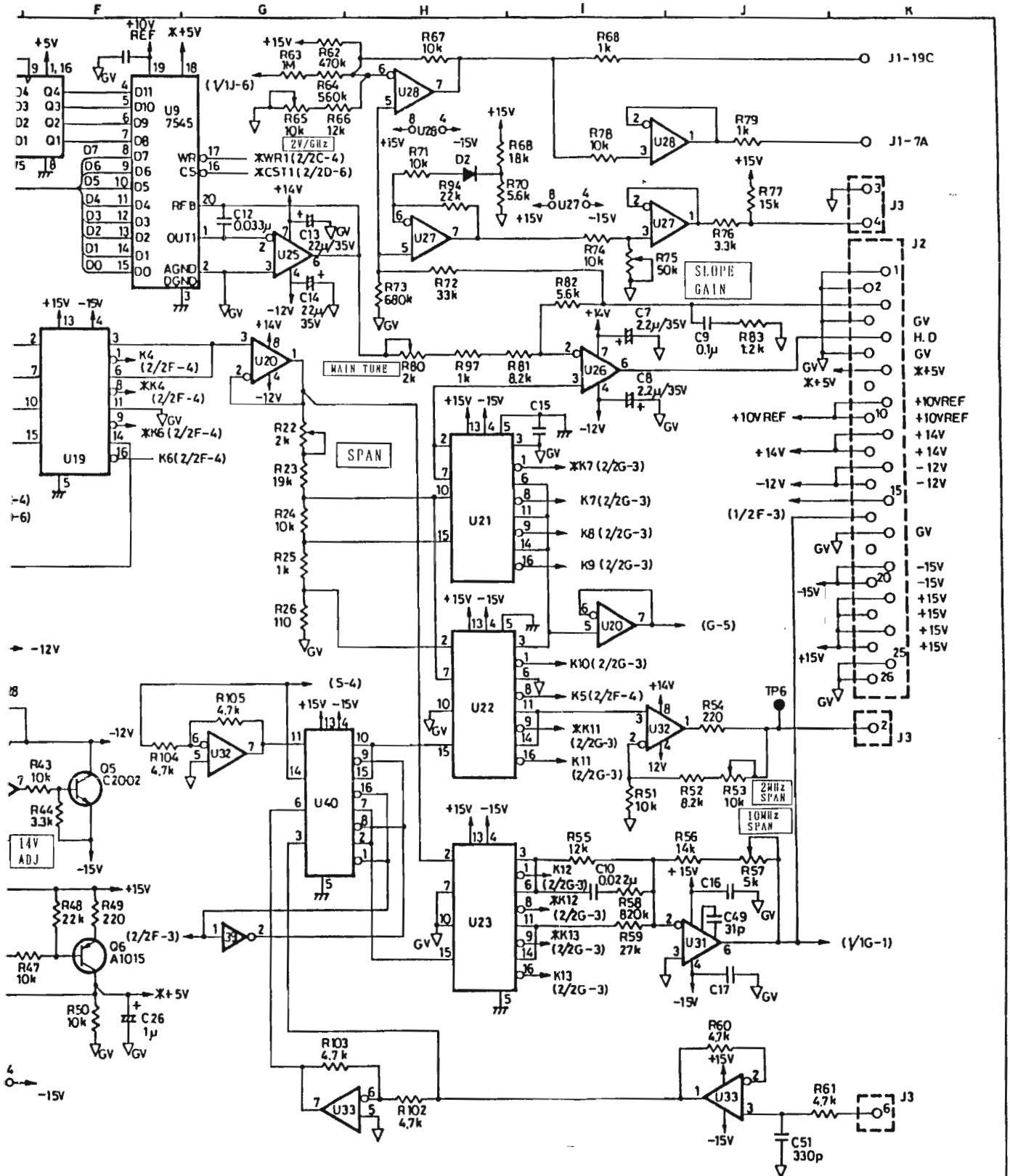

R3261/3361 RF CONTROL
BLL-015672 1/2

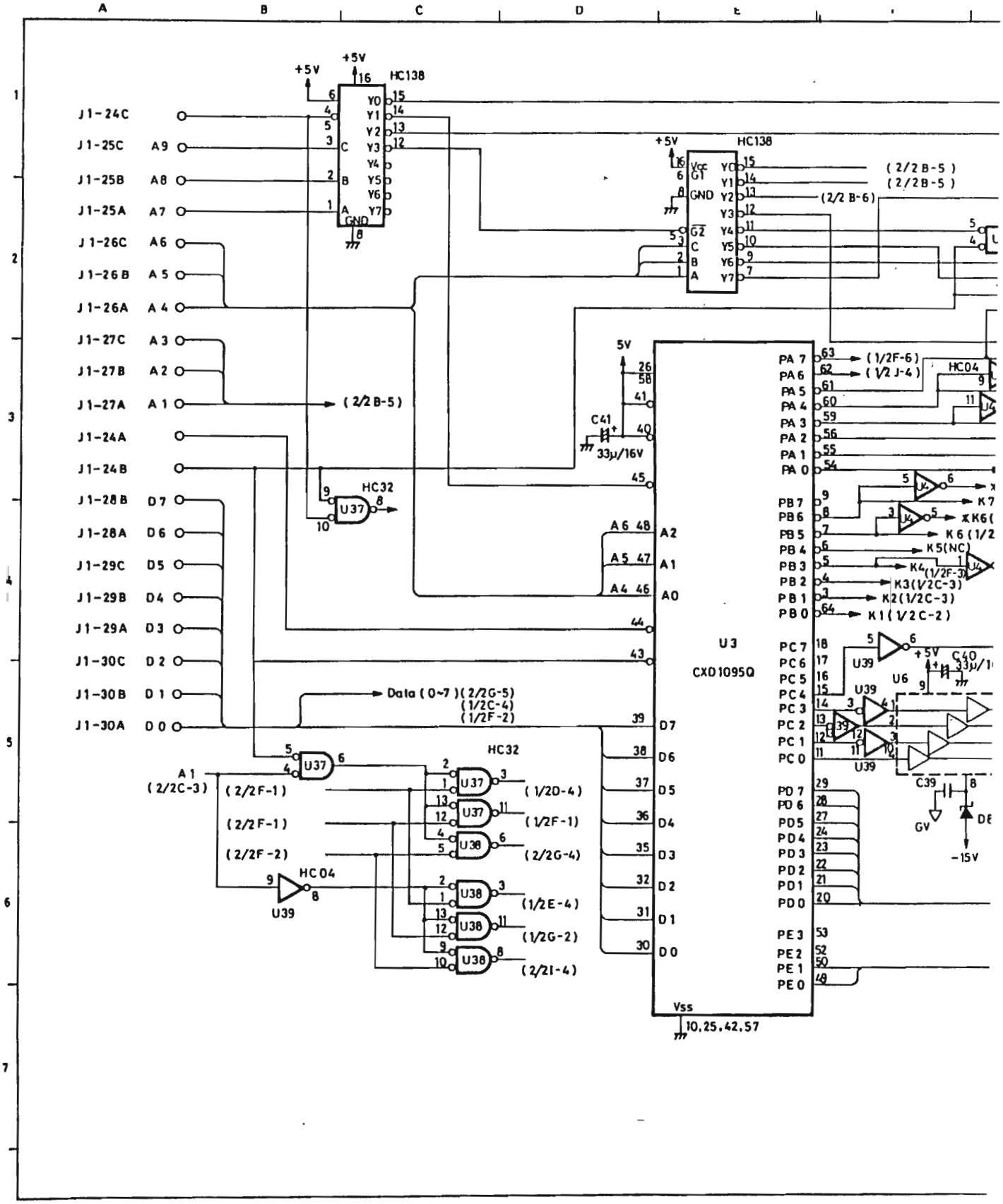
HC138
+5V
J1-24C
J1-25C A9
J1-25B A8
J1-25A A7
J1-26C A6
J1-26B A5
J1-26A A4
J1-27C A3
J1-27B A2
J1-27A A1
J1-24A
J1-24B
J1-28B D7
J1-28A D6
J1-29C D5
J1-29B D4
J1-29A D3
J1-30C D2
J1-30B D1
J1-30A D0
(2/2B-5)
HC32
U37
Data (0~7)(2/2G-5)
(1/2C-4)
(1/2F-2)
A1
(2/2C-3)
(2/2F-1)
(2/2F-1)
(2/2F-2)
HC04
U39
U38
(1/2D-4)
(1/2F-1)
(2/2G-4)
(1/2E-4)
(1/2G-2)
(2/2I-4)
(2/2B-5)
(2/2B-5)
(2/2B-6)
C41
33μ/16V
U3
CXD1095Q
Vss
10,25,42,57
(1/2F-6)
(1/2J-4)
K7
K6
K5(NC)
K4(1/2F-3)
K3(1/2C-3)
K2(1/2C-3)
K1(1/2C-2)
C40
C39
GV
-15V

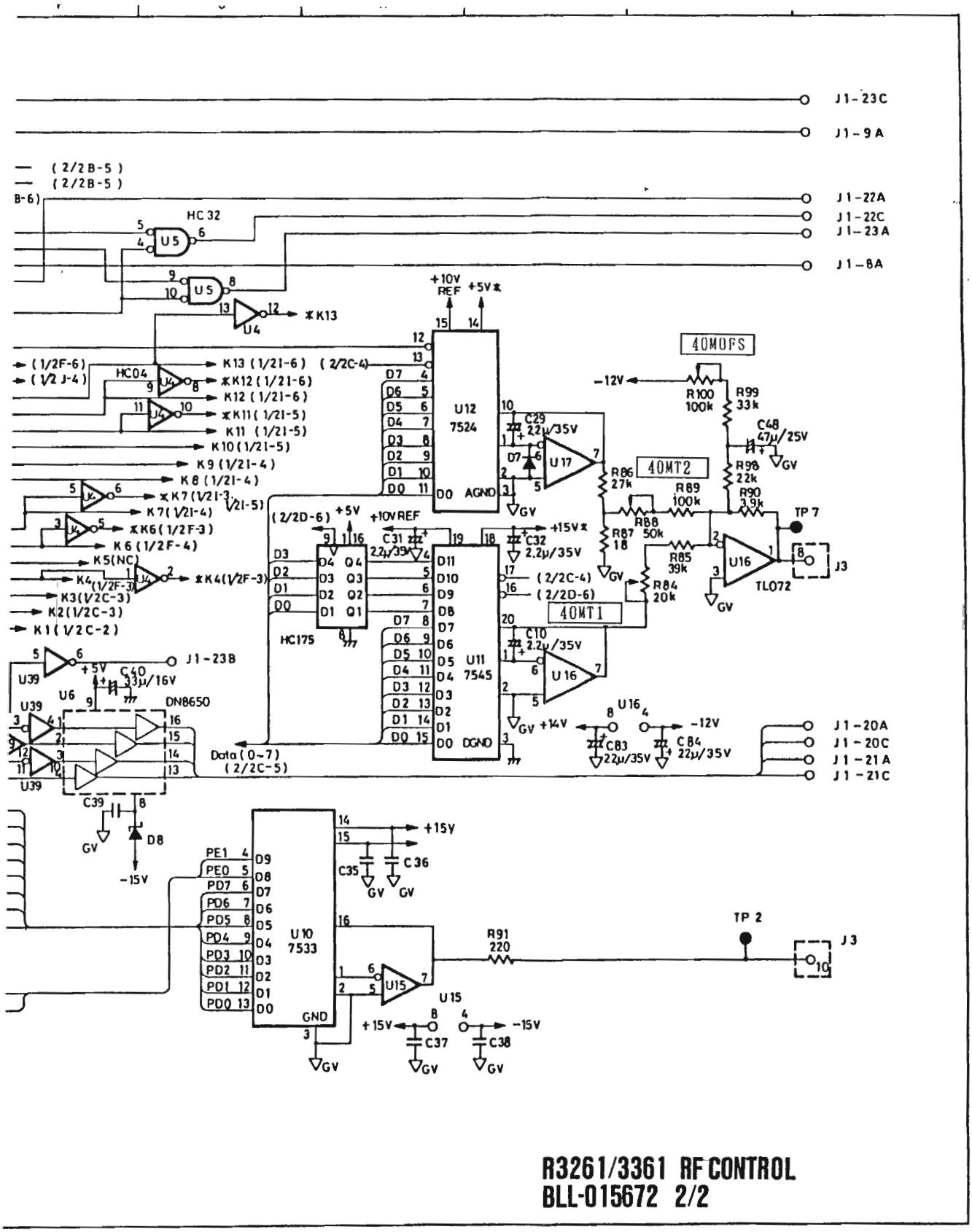
J1-23C
J1-9A
J1-22A
J1-22C
J1-23A
J1-8A
HC32
U5
U4
*K13
+10V REF
+5V*
U12 7524
AGND
40MOFS
-12V
R100 100k
R99 33k
C48 47μ/25V
C29 2.2μ/35V
U17
R86 27k
40MT2
R98 22k
R89 100k
R90 3.9k
TP 7
R88 50k
R87 18
R85 39k
U16
TL072
J3
R84 20k
40MT1
C10 2.2μ/35V
U11 7545
DGND
+15V*
C32 2.2μ/35V
C31 2.2μ/35V
HC175
+14V
C83 22μ/35V
C84 22μ/35V
J1-20A
J1-20C
J1-21A
J1-21C
Data(0~7) (2/2C-5)
J1-23B
C40 33μ/16V
DN8650
C39
D8
+15V
-15V
C35
C36
U10 7533
GND
R91 220
TP 2
U15
C37
C38
R3261/3361 RF CONTROL
BLL-015672 2/2

R3261/3361
IF SECTION
BLQ-015668 (1/20)

Parts No.	Advantest Stock No.	Description					Note
C1	CMC-AC470PR3K	FXD	DIPPED MICA	470PF	±5%	300V	
C2	CMC-AD1800PR5K	FXD	DIPPED MICA	1800PF	±5%	500V	
C3	CMC-AC560PR3K	FXD	DIPPED MICA	560PF	±5%	300V	
C4	CMC-AC470PR3K	FXD	DIPPED MICA	470PF	±5%	300V	
C5	CCP-BBR1U50V	FXD	CHIP	0.1μF	+80%, -20%	50V	
C6	CCP-BAR01U50V	FXD	CHIP	0.01μF	±10PF	50V	
C7	CCP-BA8P50V	FXD	CHIP	8PF	±0.5PF	50V	
C8	CTM-BM6P	VAR	CHIP	6PF	+50%, -0%	100V	
C9	CCP-AT27PR1K	FXD	CHIP	27PF	±5%	100V	
C10	CTM-BM20P	VAR	CTM	20PF	+50%, -0%	100V	
C11	CCP-BAR01U50V	FXD	CHIP	0.01μF	±10%	50V	
C16	CCP-BBR1U50V	FXD	CHIP	0.1μF	+80%, -20%	50V	
C18	CCP-BAR01U50V	FXD	CHIP	0.01μF	±10%	50V	
C19	CCP-BA8P50V	FXD	CHIP	8PF	±0.5PF	50V	
C20	CTM-BM6P	VAR	CHIP	6PF	+50%, -0%	100V	
C21	CCP-AT27PR1K	FXD	CHIP	27PF	±5%	100V	
C22	CTM-BM20P	VAR	CHIP	20PF	+50%, -0%	100V	
C23	CCP-BAR01U50V	FXD	CHIP	0.01μF	±10%	50V	
C29	CCP-BBR1U50V	FXD	CHIP	0.1μF	+80%, -20%	50V	
C31	CCP-BAR01U50V	FXD	CHIP	0.01μF	±10%	50V	
C39	CCP-AX1000PR1K	FXD	CHIP	1000PF	±1%	100V	
C40	CCP-BBR1U50V	FXD	CHIP	0.1μF	+80%, -20%	50V	
C42	CCP-BAR01U50V	FXD	CHIP	0.01μF	±10%	50V	
C46	CCP-AX1000PR1K	FXD	CHIP	1000PF	±1%	100V	
C47	CCP-BBR1U50V	FXD	CHIP	0.1μF	+80%, -20%	50V	
C49	CCP-BAR01U50V	FXD	CHIP	0.01μF	±10%	50V	
C51	CCP-BBR1U50V	FXD	CHIP	0.1μF	+80%, -20%	50V	
C54	CCP-BAR01U50V	FXD	CHIP	0.01μF	±10%	50V	
C58	CCP-BBR1U50V	FXD	CHIP	0.1μF	+80%, -20%	50V	
C60	CCP-BAR01U50V	FXD	CHIP	0.01μF	±10%	50V	
C61	CCP-BBR1U50V	FXD	CHIP	0.1μF	+80%, -20%	50V	
C62	CCP-BAR01U50V	FXD	CHIP	0.01μF	±10%	50V	
C63	CCP-BBR1U50V	FXD	CHIP	0.1μF	+80%, -20%	50V	
C65	CCP-BAR01U50V	FXD	CHIP	0.01μF	±10%	50V	
C66	CCP-BBR1U50V	FXD	CHIP	0.1μF	+80%, -20%	50V	
C67	CCP-BAR01U50V	FXD	CHIP	0.01μF	±10%	50V	
C68	CCP-BBR1U50V	FXD	CHIP	0.1μF	+80%, -20%	50V	
C72	CCP-BAR01U50V	FXD	CHIP	0.01μF	±10%	50V	
C73	CCP-BBR1U50V	FXD	CHIP	0.1μF	+80%, -20%	50V	
C75	CCP-BAR01U50V	FXD	CHIP	0.01μF	±10%	50V	

R3261/3361
IF SECTION
BLQ-015668 (2/20)

Parts No.	Advantest Stock No.	Description					Note
C76	CCP-BBR1U50V	FXD	CHIP	0.1μF	+80%, -20%	50V	
C77	CCP-BAR01U50V	FXD	CHIP	0.01μF	±10%	50V	
C78	CCP-BBR1U50V	FXD	CHIP	0.1μF	+80%, -20%	50V	
C82	CCP-BBR1U50V	FXD	CHIP	0.1μF	+80%, -20%	50V	
C90	CCP-AT1R5PR1K	FXD	CHIP	1.5PF	±10%	100V	
C96	CCP-BBR1U50V	FXD	CHIP	0.1μF	+80%, -20%	50V	
C98	CCP-BAR01U50V	FXD	CHIP	0.01μF	±10%	50V	
C103	CCP-BBR1U50V	FXD	CHIP	0.1μF	+80%, -20%	50V	
C108	CCP-AX1000PR1K	FXD	CHIP	1000PF	±1%	100V	
C109	CCP-BBR1U50V	FXD	CHIP	0.1μF	+80%, -20%	50V	
C111	CCP-BAR01U50V	FXD	CHIP	0.01μF	±10%	50V	
C117	CCP-AX1000PR1K	FXD	CHIP	1000PF	±1%	100V	
C118	CCP-BBR1U50V	FXD	CHIP	0.1μF	+80%, -20%	50V	
C120	CCP-BAR01U50V	FXD	CHIP	0.01μF	±10%	50V	
C121	CCP-AT27PR1K	FXD	CHIP	27PF	±10%	100V	
C122	CTM-BM20P	VAR		20PF	+50%, -0%	100V	
C123	CCP-BA8P50V	FXD	CHIP	8PF	±0.5PF	50V	
C124	CTM-BM6P	VAR		6PF	+50%, -0%	100V	
C125	CCP-BAR01U50V	FXD	CHIP	0.01μF	±10%	50V	
C131	CCP-BBR1U50V	FXD	CHIP	0.1μF	+80%, -20%	50V	
C132	CCP-BAR01U50V	FXD	CHIP	0.01μF	±10%	50V	
C133	CCP-AT27PR1K	FXD	CHIP	27PF	±10%	100V	
C134	CTM-BM20P	VAR		20PF	+50%, -0%	100V	
C135	CCP-BA8P50V	FXD	CHIP	8PF	±0.5PF	50V	
C136	CTM-BM6P	VAR		6PF	+50%, -0%	100V	
C137	CCP-BAR01U50V	FXD	CHIP	0.01μF	±10%	50V	
C144	CCP-AW820PR1K	FXD	CHIP	820PF	±1%	100V	
C145	CCP-BAR01U50V	FXD	CHIP	0.01μF	±10%	50V	
C146	CCP-BA100P50V	FXD	CHIP	100PF	±10%	50V	
C147	CCP-BAR01U50V	FXD	CHIP	0.01μF	±10%	50V	
C148	CCP-AT7PR1K	FXD	CHIP	7PF	±10%	100V	
C150	CCP-AT1PR1K	FXD	CHIP	1PF	±10%	100V	
C154	CCP-AT12PR1K	FXD	CHIP	12PF	±10%	100V	
C155	CCP-BAR01U50V	FXD	CHIP	0.01μF	±10%	50V	
C156	CCP-BAR01U50V	FXD	CHIP	0.01μF	±10%	50V	
C157	CCP-BBR1U50V	FXD	CHIP	0.1μF	+80%, -20%	50V	
C158	CCP-BAR01U50V	FXD	CHIP	0.01μF	±10%	50V	
C160	CCP-BBR1U50V	FXD	CHIP	0.1μF	+80%, -20%	50V	
C162	CCP-BAR01U50V	FXD	CHIP	0.01μF	±10%	50V	
C163	CCP-AW330PR1K	FXD	CHIP	330PF	±1%	100V	

R3261/3361
IF SECTION
BLQ-015668 (3/20)

Parts No.	Advantest Stock No.	Description					Note
C164	CCP-BAR01U50V	FXD	CHIP	0.01μF	±10%	50V	
C165	CCP-BBR1U50V	FXD	CHIP	0.1μF	+80%, -20%	50V	
C166	CCP-BBR1U50V	FXD	CHIP	0.1μF	+80%, -20%	50V	
C167	CCP-BBR1U50V	FXD	CHIP	0.1μF	+80%, -20%	50V	
C169	CCP-BBR1U50V	FXD	CHIP	0.1μF	+80%, -20%	50V	
C170	CCP-BAR01U50V	FXD	CHIP	0.01μF	±10%	50V	
C172	CCP-AW360PR1K	FXD	CHIP	360PF	±1%	100V	
C173	CCP-BBR1U50V	FXD	CHIP	0.1μF	+80%, -20%	50V	
C174	CCP-BAR01U50V	FXD	CHIP	0.01μF	±10%	50V	
C175	CCP-BBR1U50V	FXD	CHIP	0.1μF	+80%, -20%	50V	
C176	CCP-BAR01U50V	FXD	CHIP	0.01μF	±10%	50V	
C178	CCP-BBR1U50V	FXD	CHIP	0.1μF	+80%, -20%	50V	
C181	CCP-AT22PR1K	FXD	CHIP	22PF	±10%	100V	
C182	CCP-AT20PR1K	FXD	CHIP	20PF	±10%	100V	
C184	CCP-BA15P50V	FXD	CHIP	15PF	±5%	50V	
C185	CCP-BBR1U50V	FXD	CHIP	0.1μF	+80%, -20%	50V	
C187	CCP-AV220PR1K	FXD	CHIP	220PF	±1%	100V	
C188	CCP-AW360PR1K	FXD	CHIP	360PF	±1%	100V	
C190	CCP-AV220PR1K	FXD	CHIP	220PF	±1%	100V	
C191	CFM-AHR22U100V	FXD	CHIP	0.22μF	±10%	100V	
C192	CFM-ASR022U50V	FXD	CHIP	0.022μF	±10%	50V	
C193	CFM-AS2200P50V	FXD	CHIP	2200PF	±10%	50V	
C194	CCP-BA1000P50V	FXD	CHIP	1000PF	±10%	50V	
C195	CCP-BAR01U50V	FXD	CHIP	0.01μF	±10%	50V	
C196	CCP-BBR1U50V	FXD	CHIP	0.1μF	+80%, -20%	50V	
C198	CCP-BAR01U50V	FXD	CHIP	0.01μF	±10%	50V	
C199	CCP-BAR01U50V	FXD	CHIP	0.01μF	±10%	50V	
C201	CCP-AT22PR1K	FXD	CHIP	22PF	±10%	100V	
C202	CCP-BA8P50V	FXD	CHIP	8PF	±0.5PF	50V	
C203	CCP-BA3P50V	FXD	CHIP	3PF	±0.25PF	50V	
C204	CCP-BA33P50V	FXD	CHIP	33PF	±5%	50V	
C205	CFM-AHR47U100V	FXD	CHIP	0.47μF	±10%	100V	
C206	CCP-TF1U50V	FXD	CHIP	1μF	+80%, -20%	50V	
C208	CCP-BBR1U50V	FXD	CHIP	0.1μF	+80%, -20%	50V	
C213	CCP-BA1000P50V	FXD	CHIP	1000PF	±10%	50V	
C214	CCP-BA1000P50V	FXD	CHIP	1000PF	±10%	50V	
C215	CCP-BBR1U50V	FXD	CHIP	0.1μF	+80%, -20%	50V	
C216	CCP-TF1U50V	FXD	CHIP	1μF	+80%, -20%	50V	
C217	CCP-BAR01U50V	FXD	CHIP	0.01μF	±10%	50V	
C218	CCP-TF1U50V	FXD	CHIP	1μF	+80%, -20%	50V	

R3261/3361
IF SECTION
BLQ-015668 (4/20)

Parts No.	Advantest Stock No.	Description					Note
C219	CCP-BBR1U50V	FXD	CHIP	0.1μF	+80%, -20%	50V	
C220	CCP-BAR01U50V	FXD	CHIP	0.01μF	±10%	50V	
C221	CCP-AV100PR1K	FXD	CHIP	100PF	±2%	100V	
C222	CCP-BBR1U50V	FXD	CHIP	0.1μF	+80%, -20%	50V	
C224	CCP-BAR01U50V	FXD	CHIP	0.01μF	±10%	50V	
C226	CTA-AZ6R8U16V	FXD	TA	6.8μF	±20%	16V	
C228	CCP-BBR1U50V	FXD	CHIP	0.1μF	+80%, -20%	50V	
C230	CCK-CM47U16V-1	FXD	ELECT	47μF	±20%	16V	
C231	CCP-BBR1U50V	FXD	CHIP	0.1μF	+80%, -20%	50V	
C261	CCP-BBR1U50V	FXD	CHIP	0.1μF	+80%, -20%	50V	
C262	CCP-BBR1U50V	FXD	CHIP	0.1μF	+80%, -20%	50V	
C267	CCP-BBR1U50V	FXD	CHIP	0.1μF	+80%, -20%	50V	
C268	CCP-BBR1U50V	FXD	CHIP	0.1μF	+80%, -20%	50V	
C280	CCP-BBR033U50V	FXD	CHIP	0.033μF	±10%	50V	
C282	CCK-CM22U25V-1	FXD	ELECT	22μF	±20%	25V	
C288	CCK-CM100U25V-1	FXD	ELECT	100μF	±20%	25V	
C292	CCK-CM22U25V-1	FXD	ELECT	22μF	±20%	25V	
C294	CCP-TF1U50V	FXD	CHIP	1μF	+80%, -20%	50V	
C295	CCP-BBR1U50V	FXD	CHIP	0.1μF	+80%, -20%	50V	
C298	CCP-BBR1U50V	FXD	CHIP	0.1μF	+80%, -20%	50V	
C501	CCK-CM22U25V-1	FXD	ELECT	22μF	±20%	25V	
C507	CCP-BBR1U50V	FXD	CHIP	0.1μF	+80%, -20%	50V	
C519	CFM-ASR033U50V	FXD	FILM	0.033μF	±10%	50V	
C520	CCP-BBR1U50V	FXD	CHIP	0.1μF	+80%, -20%	50V	
C521	CCP-BA100P50V	FXD	CHIP	100PF	±5%	50V	
C522	CCP-BA1000P50V	FXD	CHIP	1000PF	±1%	50V	
C523	CCP-BA100P50V	FXD	CHIP	100PF	±5%	50V	
C525	CCP-BBR1U50V	FXD	CHIP	0.1μF	+80%, -20%	50V	
C540	CCP-BBR1U50V	FXD	CHIP	0.1μF	+80%, -20%	50V	
C550	CTA-AZ6R8U16V	FXD	TA	6.8μF	±20%	16V	
C551	CCP-BBR1U50V	FXD	CHIP	0.1μF	+80%, -20%	50V	
C552	CCP-BA1000P50V	FXD	CHIP	1000PF	±1%	50V	
C553	CCP-BBR1U50V	FXD	CHIP	0.1μF	+80%, -20%	50V	
C562	CFM-AS1000P50V	FXD	CHIP	1000PF	±1%	50V	
C564	CCP-BBR1U50V	FXD	CHIP	0.1μF	+80%, -20%	50V	
C565	CCP-BBR1U50V	FXD	CHIP	0.1μF	+80%, -20%	50V	
C566	CCP-BBR1U50V	FXD	CHIP	0.1μF	+80%, -20%	50V	
C567	CCP-BBR1U50V	FXD	CHIP	0.1μF	+80%, -20%	50V	
C568	CCP-BBR1U50V	FXD	CHIP	0.1μF	+80%, -20%	50V	
C573	CMC-AC680PR3K	FXD	DIPPED MICA	680PF	±5%	300V	

R3261/3361
IF SECTION
BLQ-015668 (5/20)

Parts No.	Advantest Stock No.	Description					Note
C574	CCP-AV120PR1K	FXD	CHIP	120PF	±2%	100V	
C575	CCP-BA1000P50V	FXD	CHIP	1000PF	±1%	50V	
C576	CCP-BA100P50V	FXD	CHIP	100PF	±5%	50V	
C578	CCP-BBR1U50V	FXD	CHIP	0.1μF	+80%, -20%	50V	
C588	CCP-BBR1U50V	FXD	CHIP	0.1μF	+80%, -20%	50V	
C590	CCP-BA1000P50V	FXD	CHIP	1000PF	±1%	50V	
CB1	DCB-FF0971X08A-1						
D1	SDS-MA78	DIODE SI					
D22	SDS-MA78	DIODE SI					
D23	SDS-MA78	DIODE SI					
D24	SDS-1SS97	DIODE SI					
D26	SDS-MA78	DIODE SI					
D27	SDS-LD1	DIODE SI					
D29	SDS-1SS281S	DIODE SI					
D32	SDZ-W100	ZENER DIODE					
D35	SDS-1SS270	DIODE SI					
D36	SDS-MA78	DIODE SI					
D38	SDZ-W100	ZENER DIODE					
D39	SDZ-W110	ZENER DIODE					
D40	SDS-1SS101	DIODE SI					
D501	SDZ-M030	ZENER DIODE					
D502	SDS-1SS270	DIODE SI					
D506	SDS-LD1	DIODE SI					
D508	SDZ-M051	ZENER DIODE					
D509	SDS-1SS270	DIODE SI					
D511	SDZ-M082	ZENER DIODE					
D512	SDS-LD1	DIODE SI					
J1	JCS-BQ096PX01	CONNECTOR					
J3	JCF-AC001JX01	CONNECTOR					
J6	JCF-AC001JX01	CONNECTOR					
L1	LCL-C00554	COIL	(VAR)	CUSTOM DEVICE	2.2μH	±20%	
L2	LCL-C00490	COIL		CUSTOM DEVICE	4μH		
L3	LCL-C00673	COIL		CUSTOM DEVICE			
L4	LCL-C00490	COIL		CUSTOM DEVICE			
L5	LCL-C00124	TOROIDAL CORE					
L6	LCL-E00980	COIL	CHIP	220μH	±10%		
L7	LCL-C00010	COIL		CUSTOM DEVICE			
L8	LCL-C00672			CUSTOM DEVICE	44μH	27PF	
L9	LCL-C00010	COIL		180μH	±10%		
L10	LCL-C00672			CUSTOM DEVICE	44μH	27PF	

R3261/3361
IF SECTION
BLQ-015668 (6/20)

Parts No.	Advantest Stock No.	Description					Note
L12	LCL-C00549	COIL	(VAR)	CUSTOM DEVICE	2.2μH	±10%	
L14	LCL-C00549	COIL	(VAR)	CUSTOM DEVICE	2.2μH	±10%	
L15	LCL-E00980	COIL	CHIP	220μH	±10%		
L21	LCL-C00549	COIL	(VAR)	CUSTOM DEVICE	2.2μH	±10%	
L22	LCL-E00980	COIL	CHIP	220μH	±10%		
L23	LCL-E00980	COIL	CHIP	220μH	±10%		
L24	LCL-C00549	COIL	(VAR)	CUSTOM DEVICE	2.2μH	±10%	
L25	LCL-C00010	COIL		180μH	±10%		
L26	LCL-C00672			CUSTOM DEVICE	44μH	27PF	
L27	LCL-E00980	COIL	CHIP	220μH	±10%		
L28	LCL-C00010	COIL		180μH	±10%		
L29	LCL-C00672			CUSTOM DEVICE	44μH	27PF	
L30	LCL-C00554	COIL	(VAR)	CUSTOM DEVICE	2.2μH	±20%	
L31	LCL-E00961	COIL	CHIP	5.6μH	±20%		
L32	LCL-E00980	COIL	CHIP	220μH	±10%		
L41	LCL-T00084A	TOROIDAL CORE					
L47	LCL-E00980	COIL	CHIP	5.6μH	±20%		
L48	LCL-E01122-1	COIL	CHIP	220μH	±10%		
L501	LCL-T00084A	COIL		CUSTOM DEVIC			
P1	DMY-000934-1	DELAY LINE					
P11	DMY-000934-1	DELAY LINE					
P14	DMY-000934-1	DELAY LINE					
P20	DMY-000934-1	DELAY LINE					
P31	DMY-000934-1	DELAY LINE					
P34	DMY-000934-1	DELAY LINE					
P40	DMY-000934-1	DELAY LINE					
P51	DMY-000934-1	DELAY LINE					
P54	DMY-000934-1	DELAY LINE					
P60	DMY-000934-1	DELAY LINE					
Q1	STN-2SC1623	TRANSISTOR	NPN				
Q10	STT-XN6113	TRANSISTOR	DUAL				
Q16	STN-2SC1623	TRANSISTOR	NPN				
Q25	STP-2SA812	TRANSISTOR	PNP				
Q27	STN-2SC1623	TRANSISTOR	NPN				
Q33	SFN-2SK30-1	FET	N-JUNCTION				
Q34	STN-2SC1623	TRANSISTOR	NPN				
Q37	STP-2SA812	TRANSISTOR	PNP				
Q38	STN-2SC1623	TRANSISTOR	NPN				
Q44	SFN-2SK30-1	FET	N-JUNCTION				
Q45	SIA-3346S	TRANSISTOR	TRANSISTOR ARRAY				

R3261/3361
IF SECTION
BLQ-015668 (7/20)

Parts No.	Advantest Stock No.	Description					Note
Q47	STN-2SC1623	TRANSISTOR		NPN			
Q49	STP-2SA812	TRANSISTOR		PNP			
Q50	STN-2SC1623	TRANSISTOR		NPN			
Q52	SFM-SST215S	FET		MOS			
Q501	STN-2SC1623	TRANSISTOR		NPN			
Q502	STP-2SA812	TRANSISTOR		NPN			
Q503	SFN-2SK113-18	FET		N-JUNCTION			
Q504	SFN-2SK113-18	FET		N-JUNCTION			
Q505	SFM-SST215S	FET		MOS			
Q506	SFN-2N4393-18	FET		N-JUNCTION			
R1	RCP-AN82	FXD	CHIP	82Ω	±5%	1/10W	
R2	RCP-AN56	FXD	CHIP	56Ω	±5%	1/10W	
R3	RCP-AN82K	FXD	CHIP	82kΩ	±5%	1/10W	
R4	RCP-AN22	FXD	CHIP	22Ω	±5%	1/10W	
R5	RVR-DF100	VAR		100Ω	±20%	1/2W	
R6	RCP-AN470	FXD	CHIP	470Ω	±5%	1/10W	
R7	RCP-AN1K	FXD	CHIP	1kΩ	±5%	1/10W	
R9	RCP-AN100	FXD	CHIP	100Ω	±5%	1/10W	
R10	RCP-AN15	FXD	CHIP	15Ω	±5%	1/10W	
R11	RCP-AN33	FXD	CHIP	33Ω	±5%	1/10W	
R12	RCP-AN22K	FXD	CHIP	22kΩ	±5%	1/10W	
R13	RCP-AN1K	FXD	CHIP	1kΩ	±5%	1/10W	
R14	RCP-AN4R7K	FXD	CHIP	4.7kΩ	±5%	1/10W	
R15	RCP-AN100	FXD	CHIP	100Ω	±5%	1/10W	
R16	RCP-AN91	FXD	CHIP	91Ω	±5%	1/10W	
R17	RCP-AN270	FXD	CHIP	270Ω	±5%	1/10W	
R18	RCP-AN360	FXD	CHIP	360Ω	±5%	1/10W	
R19	RCP-AN820	FXD	CHIP	820Ω	±5%	1/10W	
R20	RCP-AN3R9K	FXD	CHIP	3.9kΩ	±5%	1/10W	
R21	RCP-AN560	FXD	CHIP	560Ω	±5%	1/10W	
R22	RCP-AN2R2K	FXD	CHIP	2.2kΩ	±5%	1/10W	
R27	RCP-AN18K	FXD	CHIP	18kΩ	±5%	1/10W	
R28	RCP-AN15	FXD		15kΩ	±5%	1/10W	
R29	RVR-DF100	VAR		100Ω	±20%	1/2W	
R30	RCP-AN22K	FXD	CHIP	22kΩ	±5%	1/10W	
R31	RCP-AN4R7K	FXD	CHIP	4.7kΩ	±5%	1/10W	
R32	RCP-AN1K	FXD	CHIP	1kΩ	±5%	1/10W	
R33	RCP-AN560	FXD	CHIP	560Ω	±5%	1/10W	
R34	RCP-AN100	FXD	CHIP	100Ω	±5%	1/10W	
R35	RCP-AN91	FXD	CHIP	91Ω	±5%	1/10W	

R3261/3361
IF SECTION
BLQ-015668 (8/20)

Parts No.	Advantest Stock No.	Description					Note
R36	RCP-AN270	FXD	CHIP	270Ω	±5%	1/10W	
R37	RCP-AN360	FXD	CHIP	360Ω	±5%	1/10W	
R38	RCP-AN820	FXD	CHIP	820Ω	±5%	1/10W	
R39	RCP-AN3R9K	FXD	CHIP	3.9kΩ	±5%	1/10W	
R40	RCP-AN2R2K	FXD	CHIP	2.2kΩ	±5%	1/10W	
R45	RCP-AN18K	FXD	CHIP	18kΩ	±5%	1/10W	
R46	RCP-AN470	FXD	CHIP	470Ω	±5%	1/10W	
R47	RVR-DF1K	VAR		1kΩ	±20%	1/2W	
R48	RCP-AN330	FXD	CHIP	330Ω	±5%	1/10W	
R49	RCP-AN2R2K	FXD	CHIP	2.2kΩ	±5%	1/10W	
R51	RCP-AN100	FXD	CHIP	100Ω	±5%	1/10W	
R52	RCP-AN10K	FXD	CHIP	10kΩ	±5%	1/10W	
R53	RCP-AN100	FXD	CHIP	100Ω	±5%	1/10W	
R54	RCP-AN2R2K	FXD	CHIP	2.2kΩ	±5%	1/10W	
R58	RCP-AN8R2K	FXD	CHIP	8.2kΩ	±5%	1/10W	
R59	RCP-AN3R3K	FXD	CHIP	3.3kΩ	±5%	1/10W	
R60	RCP-AN750	FXD	CHIP	750Ω	±5%	1/10W	
R61	RCP-AN220	FXD	CHIP	220Ω	±5%	1/10W	
R62	RCP-AN56	FXD	CHIP	56Ω	±5%	1/10W	
R63	RCP-AN390	FXD	CHIP	390Ω	±5%	1/10W	
R64	DSP-000017	THERMISTOR		(SPECIAL PART)			
R65	RCP-AN470	FXD	CHIP	470Ω	±5%	1/10W	
R66	RCP-AN100	FXD	CHIP	100Ω	±5%	1/10W	
R67	RCP-AN2R2K	FXD	CHIP	2.2kΩ	±5%	1/10W	
R71	RCP-AN8R2K	FXD	CHIP	8.2kΩ	±5%	1/10W	
R72	RCP-AN3R3K	FXD	CHIP	3.3kΩ	±5%	1/10W	
R73	RCP-AN750	FXD	CHIP	750Ω	±5%	1/10W	
R74	RCP-AN220	FXD	CHIP	220Ω	±5%	1/10W	
R75	RCP-AN56	FXD	CHIP	56Ω	±5%	1/10W	
R76	RCP-AN560	FXD	CHIP	560Ω	±5%	1/10W	
R77	RVR-DF500	VAR		500Ω	±20%	1/2W	
R78	RCP-AN100	FXD	CHIP	100Ω	±5%	1/10W	
R79	RCP-AN150	FXD	CHIP	150Ω	±5%	1/10W	
R90	RCP-AN22	FXD	CHIP	22Ω	±5%	1/10W	
R91	RCP-AN470	FXD	CHIP	470Ω	±5%	1/10W	
R92	RCP-AN2R2K	FXD	CHIP	2.2kΩ	±5%	1/10W	
R96	RCP-AN24	FXD	CHIP	24Ω	±5%	1/10W	
R97	RVR-DF50	VAR		50Ω	±20%	1/2W	
R98	RCP-AN3K	FXD	CHIP	3kΩ	±5%	1/10W	
R99	RCP-AN2R2K	FXD	CHIP	2.2kΩ	±5%	1/10W	

R3261/3361
IF SECTION
BLQ-015668 (9/20)

Parts No.	Advantest Stock No.	Description					Note
R100	RCP-AN2K	FXD	CHIP	2kΩ	±5%	1/10W	
R101	RCP-AN1K	FXD	CHIP	1kΩ	±5%	1/10W	
R102	RCP-AN510	FXD	CHIP	510Ω	±5%	1/10W	
R103	RCP-AN270	FXD	CHIP	270Ω	±5%	1/10W	
R104	RCP-AN3R3K	FXD	CHIP	3.3kΩ	±5%	1/10W	
R105	RCP-AN2R2K	FXD	CHIP	2.2kΩ	±5%	1/10W	
R109	RCP-AN22	FXD	CHIP	22Ω	±5%	1/10W	
R110	RVR-DF50	VAR		50Ω	±20%	1/2W	
R111	RVR-DF200	VAR		200Ω	±20%	1/2W	
R112	RCP-AN3K	FXD	CHIP	3kΩ	±5%	1/10W	
R113	RCP-AN2R2K	FXD	CHIP	2.2kΩ	±5%	1/10W	
R115	RCP-AN470	FXD	CHIP	470Ω	±5%	1/10W	
R116	RCP-AN2R2K	FXD	CHIP	2.2kΩ	±5%	1/10W	
R118	RCP-AN10K	FXD	CHIP	10kΩ	±5%	1/10W	
R120	RCP-AN2R7K	FXD	CHIP	2.7kΩ	±5%	1/10W	
R121	RCP-AN430	FXD	CHIP	430Ω	±5%	1/10W	
R122	RCP-AN2R2K	FXD	CHIP	2.2kΩ	±5%	1/10W	
R123	RCP-AN220	FXD	CHIP	220Ω	±5%	1/10W	
R124	RCP-AN2R2K	FXD	CHIP	2.2kΩ	±5%	1/10W	
R125	RCP-AN10K	FXD	CHIP	10kΩ	±5%	1/10W	
R127	RCP-AN2R2K	FXD	CHIP	2.2kΩ	±5%	1/10W	
R128	RCP-AN180	FXD	CHIP	180Ω	±5%	1/10W	
R129	RCP-AN1R3K	FXD	CHIP	1.3kΩ	±5%	1/10W	
R130	RCP-AN270	FXD	CHIP	270Ω	±5%	1/10W	
R131	RCP-AN2R2K	FXD	CHIP	2.2kΩ	±5%	1/10W	
R132	RCP-AN10K	FXD	CHIP	10kΩ	±5%	1/10W	
R134	RCP-AN2R7K	FXD	CHIP	2.7kΩ	±5%	1/10W	
R135	RCP-AN150	FXD	CHIP	150Ω	±5%	1/10W	
R136	RCP-AN1R1K	FXD	CHIP	1.1kΩ	±5%	1/10W	
R137	RCP-AN510	FXD	CHIP	510Ω	±5%	1/10W	
R138	RCP-AN2R2K	FXD	CHIP	2.2kΩ	±5%	1/10W	
R139	RCP-AN10K	FXD	CHIP	10kΩ	±5%	1/10W	
R141	RCP-AN2R7K	FXD	CHIP	2.7kΩ	±5%	1/10W	
R142	RCP-AN100	FXD	CHIP	100Ω	±5%	1/10W	
R143	RCP-AN160	FXD	CHIP	160Ω	±5%	1/10W	
R144	RCP-AN560	FXD	CHIP	560Ω	±5%	1/10W	
R145	RCP-AN2R2K	FXD	CHIP	2.2kΩ	±5%	1/10W	
R146	RCP-AN22	FXD	CHIP	22Ω	±5%	1/10W	
R147	RCP-AN470	FXD	CHIP	470Ω	±5%	1/10W	
R148	RCP-AN1K	FXD	CHIP	1kΩ	±5%	1/10W	

R3261/3361
IF SECTION
BLQ-015668 (10/20)

Parts No.	Advantest Stock No.	Description					Note
R149	RVR-DF50	VAR		50Ω	±20%	1/2W	
R150	RCP-AN3K	FXD	CHIP	3kΩ	±5%	1/10W	
R151	RCP-AJ2R2K	FXD	CHIP	2.2kΩ	±5%	1/10W	
R152	RCP-AN22	FXD	CHIP	22Ω	±5%	1/10W	
R153	RCP-AN470	FXD	CHIP	470Ω	±5%	1/10W	
R154	RCP-AN2R2K	FXD	CHIP	2.2kΩ	±5%	1/10W	
R155	RCP-AN2R2K	FXD	CHIP	2.2kΩ	±5%	1/10W	
R156	RCP-AN1K	FXD	CHIP	1kΩ	±5%	1/10W	
R157	RCP-AN22	FXD	CHIP	22Ω	±5%	1/10W	
R158	RCP-AN470	FXD	CHIP	470Ω	±5%	1/10W	
R159	RVR-DF50	VAR		50Ω	±20%	1/2W	
R160	RCP-AN2R2K	FXD	CHIP	2.2kΩ	±5%	1/10W	
R161	RCP-AN1K	FXD	CHIP	1kΩ	±5%	1/10W	
R164	RAY-TL47K6	FXD	RA	47kΩ×6	±5%	1/8W	
R166	RCP-AN4R7K	FXD	CHIP	4.7kΩ	±5%	1/10W	
R168	RAY-TL47K4	FXD	RA	47kΩ×4	±5%	1/8W	
R170	RCP-AN390	FXD	CHIP	390Ω	±5%	1/10W	
R171	RCP-AN360	FXD	CHIP	360Ω	±5%	1/10W	
R172	RCP-AN2R2K	FXD	CHIP	2.2kΩ	±5%	1/10W	
R180	RCP-AN10K	FXD	CHIP	10kΩ	±5%	1/10W	
R181	RCP-AN100	FXD	CHIP	100Ω	±5%	1/10W	
R182	RCP-AN2R2K	FXD	CHIP	2.2kΩ	±5%	1/10W	
R187	RCP-AN8R2K	FXD	CHIP	8.2kΩ	±5%	1/10W	
R188	RCP-AN3R3K	FXD	CHIP	3.3kΩ	±5%	1/10W	
R189	RCP-AN1R2K	FXD	CHIP	1.2kΩ	±5%	1/10W	
R190	RCP-AN680	FXD	CHIP	680Ω	±5%	1/10W	
R191	RCP-AN220	FXD	CHIP	220Ω	±5%	1/10W	
R192	RCP-AN56	FXD	CHIP	56Ω	±5%	1/10W	
R193	RCP-AN560	FXD	CHIP	560Ω	±5%	1/10W	
R194	RVR-DF500	VAR		500Ω	±20%	1/2W	
R195	RCP-AN100	FXD	CHIP	100Ω	±5%	1/10W	
R196	RCP-AN2R2K	FXD	CHIP	2.2kΩ	±5%	1/10W	
R201	RCP-AN8R2K	FXD	CHIP	8.2kΩ	±5%	1/10W	
R202	RCP-AN3R3K	FXD	CHIP	3.3kΩ	±5%	1/10W	
R203	RCP-AN1R2K	FXD	CHIP	1.2kΩ	±5%	1/10W	
R204	RCP-AN680	FXD	CHIP	680Ω	±5%	1/10W	
R205	RCP-AN220	FXD	CHIP	220Ω	±5%	1/10W	
R206	RCP-AN56	FXD	CHIP	56Ω	±5%	1/10W	
R207	RCP-AN470	FXD	CHIP	470Ω	±5%	1/10W	
R208	DSP-000017	THERMISTOR		CUSTOM DEVICE			

R3261/3361
IF SECTION
BLQ-015668 (11/20)

Parts No.	Advantest Stock No.	Description					Note
R209	RCP-AN100	FXD	CHIP	100Ω	±5%	1/10W	
R211	RCP-AN15	FXD	CHIP	15Ω	±5%	1/10W	
R212	RCP-AN33	FXD	CHIP	33Ω	±5%	1/10W	
R213	RCP-AN150	FXD	CHIP	150Ω	±5%	1/10W	
R214	RCP-AN4R7K	FXD	CHIP	4.7kΩ	±5%	1/10W	
R215	RCP-AN22K	FXD	CHIP	22kΩ	±5%	1/10W	
R216	RCP-AN1K	FXD	CHIP	1kΩ	±5%	1/10W	
R217	RCP-AN560	FXD	CHIP	560Ω	±5%	1/10W	
R218	RCP-AN82	FXD	CHIP	82Ω	±5%	1/10W	
R219	RCP-AN270	FXD	CHIP	270Ω	±5%	1/10W	
R220	RCP-AN360	FXD	CHIP	360Ω	±5%	1/10W	
R221	RCP-AN820	FXD	CHIP	820Ω	±5%	1/10W	
R222	RCP-AN3R3K	FXD	CHIP	3.3kΩ	±5%	1/10W	
R223	RCP-AN18K	FXD	CHIP	18kΩ	±5%	1/10W	
R224	RCP-AN2R2K	FXD	CHIP	2.2kΩ	±5%	1/10W	
R230	RCP-AN180K	FXD	CHIP	180kΩ	±5%	1/10W	
R231	RCP-AJ15	FXD	CHIP	15Ω	±5%	1/10W	
R232	RVR-DF100	VAR		100Ω	±20%	1/2W	
R233	RCP-AN150	FXD	CHIP	150Ω	±5%	1/10W	
R234	RCP-AN4R7K	FXD	CHIP	4.7kΩ	±5%	1/10W	
R235	RCP-AN22K	FXD	CHIP	22kΩ	±5%	1/10W	
R236	RCP-AN1K	FXD	CHIP	1kΩ	±5%	1/10W	
R237	RCP-AN560	FXD	CHIP	560Ω	±5%	1/10W	
R238	RCP-AN82	FXD	CHIP	82Ω	±5%	1/10W	
R239	RCP-AN270	FXD	CHIP	270Ω	±5%	1/10W	
R240	RCP-AN360	FXD	CHIP	360Ω	±5%	1/10W	
R241	RCP-AN820	FXD	CHIP	820Ω	±5%	1/10W	
R242	RCP-AN3R3K	FXD	CHIP	3.3kΩ	±5%	1/10W	
R243	RCP-AN18K	FXD	CHIP	18kΩ	±5%	1/10W	
R244	RCP-AN2R2K	FXD	CHIP	2.2kΩ	±5%	1/10W	
R250	RCP-AN180K	FXD	CHIP	180kΩ	±5%	1/10W	
R251	RCP-AN560	FXD	CHIP	560Ω	±5%	1/10W	
R252	RVR-DF1K	VAR		1kΩ	±20%	1/2W	
R253	RCP-AN470	FXD	CHIP	470Ω	±5%	1/10W	
R254	RCP-AN680	FXD	CHIP	680Ω	±5%	1/10W	
R255	RCP-AN220	FXD	CHIP	220Ω	±5%	1/10W	
R256	RCP-AN10K	FXD	CHIP	10kΩ	±5%	1/10W	
R257	RCP-AN1K	FXD	CHIP	1kΩ	±5%	1/10W	
R258	RCP-AN1K	FXD	CHIP	1kΩ	±5%	1/10W	
R261	RCP-AN18	FXD	CHIP	18Ω	±5%	1/10W	

R3261/3361
IF SECTION
BLQ-015668 (12/20)

Parts No.	Advantest Stock No.	Description					Note
R265	RCP-AN820	FXD	CHIP	820Ω	±5%	1/10W	
R266	RCP-AN15K	FXD	CHIP	15kΩ	±5%	1/10W	
R268	RCP-AN1R5K	FXD	CHIP	1.5kΩ	±5%	1/10W	
R269	RCP-AN100	FXD	CHIP	100Ω	±5%	1/10W	
R270	RCP-AN82	FXD	CHIP	82Ω	±5%	1/10W	
R271	RCP-AN4R7K	FXD	CHIP	4.7kΩ	±5%	1/10W	
R272	RCP-AN18	FXD	CHIP	18Ω	±5%	1/10W	
R277	RCP-AN10K	FXD	CHIP	10kΩ	±5%	1/10W	
R278	RCP-AN5R6K	FXD	CHIP	5.6kΩ	±5%	1/10W	
R279	RCP-AN18	FXD	CHIP	18Ω	±5%	1/10W	
R280	RCP-AN3R9K	FXD	CHIP	3.9kΩ	±5%	1/10W	
R281	RCP-AN560	FXD	CHIP	560Ω	±5%	1/10W	
R282	RCP-AN110	FXD	CHIP	110Ω	±5%	1/10W	
R283	RCP-AN10	FXD	CHIP	10Ω	±5%	1/10W	
R284	RCP-AN15K	FXD	CHIP	15kΩ	±5%	1/10W	
R286	RCP-AN2R2K	FXD	CHIP	2.2kΩ	±5%	1/10W	
R287	RCP-AN10	FXD	CHIP	10Ω	±5%	1/10W	
R288	RCP-AN150	FXD	CHIP	150Ω	±5%	1/10W	
R289	RCP-AN51	FXD	CHIP	51Ω	±5%	1/10W	
R290	RCP-AN2R2K	FXD	CHIP	2.2kΩ	±5%	1/10W	
R291	RCP-AN15K	FXD	CHIP	15kΩ	±5%	1/10W	
R293	RCP-AN18K	FXD	CHIP	18kΩ	±5%	1/10W	
R294	RCP-AN15K	FXD	CHIP	15kΩ	±5%	1/10W	
R295	RCP-AN1K	FXD	CHIP	1kΩ	±5%	1/10W	
R297	RCP-AN820	FXD	CHIP	820Ω	±5%	1/10W	
R298	RVR-DF100	VAR		100Ω	±20%	1/2W	
R299	RCP-AN180	FXD	CHIP	180Ω	±5%	1/10W	
R300	RCP-AN82	FXD	CHIP	82Ω	±5%	1/10W	
R301	RVR-DF50	VAR		50Ω	±20%	1/2W	
R302	RCP-AN1K	FXD	CHIP	1kΩ	±5%	1/10W	
R303	RCP-AN390	FXD	CHIP	390Ω	±5%	1/10W	
R304	RCP-AN15K	FXD	CHIP	15kΩ	±5%	1/10W	
R305	RCP-AN390	FXD	CHIP	390Ω	±5%	1/10W	
R306	RCP-AN33K	FXD	CHIP	33kΩ	±5%	1/10W	
R307	RCP-AN47K	FXD	CHIP	47kΩ	±5%	1/10W	
R309	RCP-AN10	FXD	CHIP	10Ω	±5%	1/10W	
R310	RCP-AN5R6K	FXD	CHIP	5.6kΩ	±5%	1/10W	
R312	RCP-AN10K	FXD	CHIP	10kΩ	±5%	1/10W	
R313	RCP-AN22	FXD	CHIP	22Ω	±5%	1/10W	
R314	RCP-AN1R2K	FXD	CHIP	1.2kΩ	±5%	1/10W	

R3261/3361
IF SECTION
BLQ-015668 (13/20)

Parts No.	Advantest Stock No.	Description					Note
R315	RCP-AN470	FXD	CHIP	470kΩ	±5%	1/10W	
R316	RCP-AN6R8K	FXD	CHIP	6.8kΩ	±5%	1/10W	
R317	RCP-AN22K	FXD	CHIP	22kΩ	±5%	1/10W	
R318	RCP-AN1R2K	FXD	CHIP	1.2kΩ	±5%	1/10W	
R320	RCP-AN6R8K	FXD	CHIP	6.8kΩ	±5%	1/10W	
R321	RCP-AN3R3K	FXD	CHIP	3.3kΩ	±5%	1/10W	
R322	RCP-AN10K	FXD	CHIP	10kΩ	±5%	1/10W	
R323	RCP-AN1K	FXD	CHIP	1kΩ	±5%	1/10W	
R324	RCP-AN15K	FXD	CHIP	15kΩ	±5%	1/10W	
R325	RCP-AN180K	FXD	CHIP	180kΩ	±5%	1/10W	
R326	RVR-CB200K	VAR		200kΩ	±20%	1/2W	
R327	RCP-AN1K	FXD	CHIP	1kΩ	±5%	1/10W	
R334	RCP-AN680K	FXD	CHIP	680kΩ	±5%	1/10W	
R335	RCP-AN100K	FXD	CHIP	100kΩ	±5%	1/10W	
R336	RCP-AN680	FXD	CHIP	680Ω	±5%	1/10W	
R337	RAY-TL22K4	FXD	RA	22kΩ×4	±5%	1/8W	
R338	RAY-TK10K4	FXD	RA	10kΩ×4	±2%	1/8W	
R339	RCP-AN180	FXD	CHIP	180Ω	±5%	1/10W	
R343	RCP-AN10K	FXD	CHIP	10kΩ	±5%	1/10W	
R344	RCP-AN1K	FXD	CHIP	1kΩ	±5%	1/10W	
R346	RCP-AN4R7K	FXD	CHIP	4.7kΩ	±5%	1/10W	
R347	RVR-DF5K	VAR		5kΩ	±20%	1/2W	
R348	RCP-AN1R2K	FXD	CHIP	1.2kΩ	±5%	1/10W	
R349	RCP-AN68K	FXD	CHIP	68kΩ	±5%	1/10W	
R350	RCP-AN2R2K	FXD	CHIP	2.2kΩ	±5%	1/10W	
R351	RCP-AN5R6K	FXD	CHIP	5.6kΩ	±5%	1/10W	
R352	RCP-AN10K	FXD	CHIP	10kΩ	±5%	1/10W	
R354	RCP-AN1R5K	FXD	CHIP	1.5kΩ	±5%	1/10W	
R355	RCP-AN10K	FXD	CHIP	10kΩ	±5%	1/10W	
R356	RCP-AN1R5K	FXD	CHIP	1.5kΩ	±5%	1/10W	
R357	RAY-TL22K4	FXD	RA	22kΩ×4	±5%	1/8W	
R358	RAY-TK10K4	FXD	RA	10kΩ×4	±2%	1/8W	
R359	RCP-AN100K	FXD	CHIP	100kΩ	±5%	1/10W	
R360	RVR-DF2K	VAR		2kΩ	±20%	1/2W	
R361	RCP-AN36K	FXD	CHIP	36kΩ	±5%	1/10W	
R362	RCP-AN10K	FXD	CHIP	10kΩ	±5%	1/10W	
R363	RCP-AN1R2K	FXD	CHIP	1.2kΩ	±5%	1/10W	
R364	RCP-AN2R4K	FXD	CHIP	2.4kΩ	±5%	1/10W	
R366	RCP-AN10K	FXD	CHIP	10kΩ	±5%	1/10W	
R368	RCP-AN1K	FXD	CHIP	1kΩ	±5%	1/10W	

R3261/3361
IF SECTION
BLQ-015668 (14/20)

Parts No.	Advantest Stock No.	Description					Note
R369	RCP-AN100K	FXD	CHIP	100kΩ	±5%	1/10W	
R370	RVR-DF5K	VAR		5kΩ	±20%	1/2W	
R371	RCP-AN36K	FXD	CHIP	36kΩ	±5%	1/10W	
R372	RCP-AN1R2K	FXD	CHIP	1.2kΩ	±5%	1/10W	
R373	RCP-AN3R6K	FXD	CHIP	3.6kΩ	±5%	1/10W	
R374	RCP-AN15K	FXD	CHIP	15kΩ	±5%	1/10W	
R375	RCP-AN150	FXD	CHIP	150Ω	±5%	1/10W	
R376	RCP-AN100K	FXD	CHIP	100kΩ	±5%	1/10W	
R378	RCP-AN680	FXD	CHIP	680Ω	±5%	1/10W	
R379	RCP-AN470K	FXD	CHIP	470kΩ	±5%	1/10W	
R380	RCP-AN1M	FXD	CHIP	1MΩ	±5%	1/10W	
R382	RCP-AN680	FXD	CHIP	680Ω	±5%	1/10W	
R383	RCP-AN91K	FXD	CHIP	91kΩ	±5%	1/10W	
R384	RCP-AN1R8K	FXD	CHIP	1.8kΩ	±5%	1/10W	
R387	RCP-AN150K	FXD	CHIP	150kΩ	±5%	1/10W	
R388	RCP-AN270K	FXD	CHIP	270kΩ	±5%	1/10W	
R390	RCP-AN150K	FXD	CHIP	150kΩ	±5%	1/10W	
R391	RCP-AN3R9K	FXD	CHIP	3.9kΩ	±5%	1/10W	
R392	RCP-AN100K	FXD	CHIP	100kΩ	±5%	1/10W	
R393	RCP-AN180	FXD	CHIP	180Ω	±5%	1/10W	
R394	RCP-AN180	FXD	CHIP	180Ω	±5%	1/10W	
R395	RCP-AN100K	FXD	CHIP	100kΩ	±5%	1/10W	
R396	RVR-DF20K	VAR		20kΩ	±20%	1/2W	
R398	RCP-AN36K	FXD	CHIP	36kΩ	±5%	1/10W	
R399	RCP-AN10K	FXD	CHIP	10kΩ	±5%	1/10W	
R400	RVR-DF1K	VAR		1kΩ	±20%	1/2W	
R401	RCP-AN2R7K	FXD	CHIP	2.7kΩ	±5%	1/10W	
R402	REE-AR510	FXD	THERMAL	510Ω	(3300 PPM/°C)		
R403	RCP-AN3R9K	FXD	CHIP	3.9kΩ	±5%	1/10W	
R404	RCP-AN10K	FXD	CHIP	10kΩ	±5%	1/10W	
R405	RCP-AN22K	FXD	CHIP	22kΩ	±5%	1/10W	
R406	RCP-AN330	FXD	CHIP	330Ω	±5%	1/10W	
R407	RCP-AN1M	FXD	CHIP	1MΩ	±5%	1/10W	
R408	RCP-AN10K	FXD	CHIP	10kΩ	±5%	1/10W	
R411	RCP-AN33K	FXD	CHIP	33kΩ	±5%	1/10W	
R413	RCP-AN1K	FXD	CHIP	1kΩ	±5%	1/10W	
R414	RVR-DF1K	VAR		1kΩ	±20%	1/2W	
R416	RCP-AN4R7K	FXD	CHIP	4.7kΩ	±5%	1/10W	
R417	RCP-AN22K	FXD	CHIP	22kΩ	±5%	1/10W	
R418	RCP-AN10K	FXD	CHIP	10kΩ	±5%	1/10W	

R3261/3361
IF SECTION
BLQ-015668 (15/20)

Parts No.	Advantest Stock No.	Description					Note
R419	RCP-AN510	FXD	CHIP	510Ω	±5%	1/10W	
R420	RCP-AN1R5K	FXD	CHIP	1.5kΩ	±5%	1/10W	
R421	RCP-AN3K	FXD	CHIP	3kΩ	±5%	1/10W	
R422	RCP-AN1R5K	FXD	CHIP	1.5kΩ	±5%	1/10W	
R423	RCP-AN10K	FXD	CHIP	10kΩ	±5%	1/10W	
R424	RCP-AN10K	FXD	CHIP	10kΩ	±5%	1/10W	
R428	RCP-AN1R5K	FXD	CHIP	1.5kΩ	±5%	1/10W	
R429	RCP-AN2R7K	FXD	CHIP	2.7kΩ	±5%	1/10W	
R430	RCP-AN5R6K	FXD	CHIP	5.6kΩ	±5%	1/10W	
R431	RCP-AN100K	FXD	CHIP	100kΩ	±5%	1/10W	
R432	RCP-AN270K	FXD	CHIP	270kΩ	±5%	1/10W	
R433	RCP-AN1R5K	FXD	CHIP	1.5kΩ	±5%	1/10W	
R434	RCP-AN2K	FXD	CHIP	2kΩ	±5%	1/10W	
R436	RCP-AN10K	FXD	CHIP	10kΩ	±5%	1/10W	
R438	RAY-TL22K8	FXD	RA	22kΩ×8	±5%	1/8W	
R439	RCP-AN4R7K	FXD	CHIP	4.7kΩ	±5%	1/10W	
R440	RCP-AN1R5K	FXD	CHIP	1.5kΩ	±5%	1/10W	
R441	RCP-AN1K	FXD	CHIP	1kΩ	±5%	1/10W	
R442	RCP-AN1R5K	FXD	CHIP	1.5kΩ	±5%	1/10W	
R443	RCP-AN1K	FXD	CHIP	1kΩ	±5%	1/10W	
R444	RCP-AN4R7K	FXD	CHIP	4.7kΩ	±5%	1/10W	
R445	RCP-AN1R5K	FXD	CHIP	1.5kΩ	±5%	1/10W	
R447	RCP-AN1R2K	FXD	CHIP	1.2kΩ	±5%	1/10W	
R448	RCP-AN470	FXD	CHIP	470Ω	±5%	1/10W	
R449	RCP-AN270	FXD	CHIP	270Ω	±5%	1/10W	
R450	RCP-AN56	FXD	CHIP	56Ω	±5%	1/10W	
R451	RCP-AN100K	FXD	CHIP	100kΩ	±5%	1/10W	
R452	RCP-AN150	FXD	CHIP	150Ω	±5%	1/10W	
R453	RCP-AN2R2K	FXD	CHIP	2.2kΩ	±5%	1/10W	
R455	RCP-AN1R5K	FXD	CHIP	1.5kΩ	±5%	1/10W	
R456	RCP-AN2R4K	FXD	CHIP	2.4kΩ	±5%	1/10W	
R461	RCP-AN22K	FXD	CHIP	22kΩ	±5%	1/10W	
R463	RCP-AN1K	FXD	CHIP	1kΩ	±5%	1/10W	
R464	RCP-AN100K	FXD	CHIP	100kΩ	±5%	1/10W	
R465	RVR-DF100K	VAR		100kΩ	±20%	1/2W	
R466	RCP-AN330	FXD	CHIP	330Ω	±5%	1/10W	
R467	RVR-DF1K	VAR		1kΩ	±20%	1/2W	
R468	RCP-AN3R3K	FXD	CHIP	3.3kΩ	±5%	1/10W	
R469	RCP-AN680K	FXD	CHIP	680kΩ	±5%	1/10W	
R470	RCP-AN680	FXD	CHIP	680Ω	±5%	1/10W	

R3261/3361
IF SECTION
BLQ-015668 (16/20)

Parts No.	Advantest Stock No.	Description					Note
R471	RCP-AN220K	FXD	CHIP	220kΩ	±5%	1/10W	
R472	RCP-AN10K	FXD	CHIP	10kΩ	±5%	1/10W	
R473	RVR-DF1K	VAR		1kΩ	±20%	1/2W	
R474	RCP-AN62K	FXD	CHIP	62kΩ	±5%	1/10W	
R475	RCP-AN330	FXD	CHIP	330Ω	±5%	1/10W	
R476	RCP-AN15K	FXD	CHIP	15kΩ	±5%	1/10W	
R477	RCP-AN4R7K	FXD	CHIP	4.7kΩ	±5%	1/10W	
R480	RCP-AN1K	FXD	CHIP	1kΩ	±5%	1/10W	
R481	RCP-AN15K	FXD	CHIP	15kΩ	±5%	1/10W	
R482	RCB-AG22K						
R483	RCP-AN2R2K	FXD	CHIP	2.2kΩ	±5%	1/10W	
R484	RCP-AN82	FXD	CHIP	82Ω	±5%	1/10W	
R485	RCP-AN2R2K	FXD	CHIP	2.2kΩ	±5%	1/10W	
R486	RCP-AN82	FXD	CHIP	82Ω	±5%	1/10W	
R487	RCP-AN10K	FXD	CHIP	10kΩ	±5%	1/10W	
R488	RCP-AN1K	FXD	CHIP	1kΩ	±5%	1/10W	
R489	RCP-AN1K	FXD	CHIP	1kΩ	±5%	1/10W	
R490	RCP-AN15	FXD	CHIP	15Ω	±5%	1/10W	
R491	RCP-AN39	FXD	CHIP	39Ω	±5%	1/10W	
R492	RCP-AN330	FXD	CHIP	330Ω	±5%	1/10W	
R493	RCP-AN1K	FXD	CHIP	1kΩ	±5%	1/10W	
R494	RCP-AN100K	FXD	CHIP	100kΩ	±5%	1/10W	
R495	RCP-AN1R5K	FXD	CHIP	1.5kΩ	±5%	1/10W	
R496	RCP-AN2R7K	FXD	CHIP	2.7kΩ	±5%	1/10W	
R497	RCP-AN47K	FXD	CHIP	47kΩ	±5%	1/10W	
R501	RCP-AN180K	FXD	CHIP	180kΩ	±5%	1/10W	
R503	RCP-AN10K	FXD	CHIP	10kΩ	±5%	1/10W	
R504	RVR-DF10K	VAR		10kΩ	±20%	1/2W	
R505	RCP-AN2K	FXD	CHIP	2kΩ	±5%	1/10W	
R508	RCP-AN1R5K	FXD	CHIP	1.5kΩ	±5%	1/10W	
R509	RCP-AN510	FXD	CHIP	510Ω	±5%	1/10W	
R511	RAY-TL4R7K4	FXD	RA	4.7kΩ×4	±5%	1/8W	
R512	RCP-AN100K	FXD	CHIP	100kΩ	±5%	1/10W	
R513	RCP-AN10K	FXD	CHIP	10kΩ	±5%	1/10W	
R515	RCP-AN3R3K	FXD	CHIP	3.3kΩ	±5%	1/10W	
R517	RVR-DF5K	VAR		5kΩ	±20%	1/2W	
R518	RVR-DF20K	VAR		20kΩ	±20%	1/2W	
R519	RCP-AN4R7K	FXD	CHIP	4.7kΩ	±5%	1/10W	
R521	RCP-AN10K	FXD	CHIP	10kΩ	±5%	1/10W	
R522	RCP-AN4R7K	FXD	CHIP	4.7kΩ	±5%	1/10W	

R3261/3361
IF SECTION
BLQ-015668 (17/20)

Parts No.	Advantest Stock No.	Description					Note
R524	RCP-AN7R5K	FXD	CHIP	7.5kΩ	±5%	1/10W	
R525	RVR-DR2K	VAR		2kΩ	±20%	1/2W	
R526	RCP-AN510	FXD	CHIP	510Ω	±5%	1/10W	
R527	RCP-AN820	FXD	CHIP	820Ω	±5%	1/10W	
R528	RCP-AN1K	FXD	CHIP	1kΩ	±5%	1/10W	
R529	RVR-DR1K	VAR		1kΩ	±20%	1/2W	
R531	RCP-AN2K	FXD	CHIP	2kΩ	±5%	1/10W	
R532	RCP-AN10	FXD	CHIP	10Ω	±5%	1/10W	
R534	RCP-AN220	FXD	CHIP	220Ω	±5%	1/10W	
R535	RCP-AN3R3K	FXD	CHIP	3.3kΩ	±5%	1/10W	
R536	RCP-AN2R2K	FXD	CHIP	2.2kΩ	±5%	1/10W	
R537	RCP-AN1K	FXD	CHIP	1kΩ	±5%	1/10W	
R538	RCP-AN22K	FXD	CHIP	22kΩ	±5%	1/10W	
R542	RCP-AN4R7K	FXD	CHIP	4.7kΩ	±5%	1/10W	
R543	RCP-AN22K	FXD	CHIP	22kΩ	±5%	1/10W	
R545	RCP-AN3R3K	FXD	CHIP	3.3kΩ	±5%	1/10W	
R546	RCP-AN10K	FXD	CHIP	10kΩ	±5%	1/10W	
R550	RCP-AN4R7K	FXD	CHIP	4.7kΩ	±5%	1/10W	
R551	RCP-AN3R3K	FXD	CHIP	3.3kΩ	±5%	1/10W	
R552	RCP-AN4R7K	FXD	CHIP	4.7kΩ	±5%	1/10W	
R553	RCP-AN33K	FXD	CHIP	33kΩ	±5%	1/10W	
R554	RCP-AN10K	FXD	CHIP	10kΩ	±5%	1/10W	
R555	RCP-AN5R1K	FXD	CHIP	5.1kΩ	±5%	1/10W	
R556	RCP-AJ10K	FXD	CHIP	10kΩ	±5%	1/10W	
R557	RCP-AN10K	FXD	CHIP	10kΩ	±5%	1/10W	
R558	RCP-AN6R2K	FXD	CHIP	6.2kΩ	±5%	1/10W	
R559	RCP-AN8R2K	FXD	CHIP	8.2kΩ	±5%	1/10W	
R560	RCP-AN10K	FXD	CHIP	10kΩ	±5%	1/10W	
R561	RVR-DF100	VAR		100Ω	±20%	1/2W	
R562	RCP-AN100K	FXD	CHIP	100kΩ	±5%	1/10W	
R564	RCP-AN22K	FXD	CHIP	22kΩ	±5%	1/10W	
R565	RCP-AN3R3K	FXD	CHIP	3.3kΩ	±5%	1/10W	
R566	RCP-AN10K	FXD	CHIP	10kΩ	±5%	1/10W	
R567	RCP-AN10K	FXD	CHIP	10kΩ	±5%	1/10W	
R568	RVR-DF100	VAR		100Ω	±20%	1/2W	
R569	RCP-AN1R2K	FXD	CHIP	1.2kΩ	±5%	1/10W	
R570	RCP-AN10K	FXD	CHIP	10kΩ	±5%	1/10W	
R571	RCP-AN3R3K	FXD	CHIP	3.3kΩ	±5%	1/10W	
R572	RVR-DF100	VAR		100Ω	±20%	1/2W	
R573	RCP-AN22K	FXD	CHIP	22kΩ	±5%	1/10W	

R3261/3361
IF SECTION
BLQ-015668 (18/20)

Parts No.	Advantest Stock No.	Description	Note
R574	RCP-AN3R3K	FXD CHIP 3.3kΩ ±5% 1/10W	
R575	RCP-AN4R7K	FXD CHIP 4.7kΩ ±5% 1/10W	
R576	RCP-AN1K	FXD CHIP 1kΩ ±5% 1/10W	
R579	RCP-AN1K	FXD CHIP 1kΩ ±5% 1/10W	
SW1	SHB-001544	DIODE SWITCH	
SW2	SHB-001543	DIODE SWITCH	
SW4	SHB-001544	DIODE SWITCH	
SW5	SHB-001543	DIODE SWITCH	
SW6	SHB-001544	DIODE SWITCH	
SW7	SHB-001543	DIODE SWITCH	
SW8	SHB-001544	DIODE SWITCH	
TP1	JTE-AH001JX01	TERMINAL	
TP7	JTE-AH001JX01	TERMINAL	
TP12	JTE-AH001JX01	TERMINAL	
TP501	JTE-AH001JX01	TERMINAL	
TP502	JTE-AH001JX01	TERMINAL	
TP507	JTE-AH001JX01	TERMINAL	
U1	SHB-001655	VIDEO AMP	
U3	SHB-001658	VIDEO AMP	
U5	SHB-001656	VIDEO AMP	
U6	SHB-001657	VIDEO AMP	
U8	SHB-001655	VIDEO AMP	
U13	SIA-TL072S	OP AMP Dual Low Noise	
U17	SIT-7407S	Hex Buffer (Open Collector High Voltage)	
U21	SIT-74LS00S	QUAD 2 INPUT POSI-NAND	
U22	SHB-001656	VIDEO AMP	
U23	SHB-001657	VIDEO AMP	
U25	SHB-001655	VIDEO AMP	
U26	SHB-001658	VIDEO AMP	
U28	SHB-001655	VIDEO AMP	
U29	SHB-001655	VIDEO AMP	
U30	SHB-001464	VIDEO AMP	
U39	SHB-001657	VIDEO AMP	
U40	SIA-318	OP AMP	
U41	SIA-TL072S	OP AMP Dual Low Noise	
U42	SIM-CXD1095	I/O Expander	
U43	SIA-412	OP AMP Dual Low Drift, Low Offset	
U44	SIT-74LS32S	QUAD 2 INPUT POSI-OR	
U45	SIA-TL072S	OP AMP Dual Low Noise	
U46	SIA-357	OP AMP Wide Band Ae Compensated	

R3261/3361
IF SECTION
BLQ-015668 (19/20)

Parts No.	Advantest Stock No.	Description	Note
U47	SIA-318	OP AMP	
U48	SIA-TL072S	OP AMP Dual Low Noise	
U49	SIA-TL072S	OP AMP Dual Low Noise	
U50	SIA-TL072S	OP AMP Dual Low Noise	
U52	SIA-393S-1	Comparator Dual Low Power Low Offset	
U53	SIA-318	OP AMP	
U54	SIA-412	OP AMP Dual Low Drift, Low Offset	
U55	SIA-TL072S	OP AMP Dual Low Noise	
U57	SIT-74LS32S	QUAD 2 INPUT POSI-OR	
U58	SIM-CXD1095	I/O Expander	
U59	SIA-DG201S-1	QUAD Analog Switches	
U60	SIT-74LS86S	QUAD 2 INPUT EXCLUSIVE-OR	
U61	SIT-74LS221S	DUAL MONOS TABLE MULTIVIBRATORS	
U62	SIA-DG201S	QUAD Analog Switches	
U63	SIM-TC4S71F	DUAL INPUT OR	
U64	SIT-7406S	Hex Inverter (Open Collector High Voltage)	
U66	SIT-DN8650	Low-Active Drivers	
U68	SIT-DN8650	Low-Active Drivers	
U69	SIA-4066	QUAD Analog Switches	
U73	SIT-74LS122S	Monostable Multivibrator	
U74	SIA-TL072S	OP AMP Dual Low Noise	
U75	SIA-DG201S-1	QUAD Analog Switches	
U76	SIA-1218	12-BIT D/A Converters	
U77	SIM-TC4S69F	INVERT GATE	
U78	SIA-TL072S	OP AMP Dual Low Noise	
U80	SIM-TC4S71F	DUAL INPUT OR	
U81	SIM-TC4S81F	DUAL INPUT AND	
U82	SIM-TC4S71F	DUAL INPUT OR	
U83	SIM-TC4S81F	DUAL INPUT AND	
U501	SIM-74HC04S	HEX INVERTER	
U502	SIM-74HC05S	HEX BUFFER (OPEN DRAIN)	
U503	SIM-653820U	Custom Made	
U504	SIA-DAC703J	16-BIT D/A Converters	
U505	SIA-TL071CPS-1	OP AMP Low Noise	
U506	SIA-TL072CPS	OP AMP Dual Low Noise	
U508	SIA-DG201S-1	QUAD Analog Switches	
U509	SIM-74HC107S	Dual j-k Flip-Flops With Clear	
U510	SIM-CXD1095	I/O Expander	
U511	SIM-74HC32S	QUAD 2-INPUT POSI-OR	
U512	SIM-74HC139S	Dual 2 To 4-line Decoders	

R3261/3361
IF SECTION
BLQ-015668 (20/20)

Parts No.	Advantest Stock No.	Description	Note
U513	SIM-74HC08S	QUAD 2-INPUT POSI-AND	
U514	SIM-74HC174S	Hex D Flip-Flops	
U515	SIM-74HC107S	Dual J-K Flip-Flops With Clear	
U518	SIM-74HC08S	QUAD 2-INPUT POSI-AND	
U519	SIM-74HC00S	QUAD 2 INPUT POSI-NAND	
U520	SIM-74HC04S	HEX INVERTER	
U521	SIM-74HC174S	HEX D FLIP-FLOPS	
U522	SIM-74HC14S	HEX Schmitt-Trigger Inverters	
U523	SIM-TC7S04F	INVERT GATE	
U524	SIM-74HC74S	Dual D Filp-Flops With Preset and Clear	
U526	SIM-74HC157S	QUAD 2 TO 1-LINE DATA SELECTORS	
U527	SIA-311S-1	Comparator	
U529	SIA-393S-1	Comparator Dual Low Power Low Offset	
U530	SIA-TL072CPS	OP AMP Dual Low Noise	
U531	SIA-79L05	Voltage Regulator	
U532	SIA-REF01D	Voltage Regulator	
U533	SIA-TL072CPS	OP AMP Dual Low Noise	
U535	SIA-5012*KP24	16-Bit A/D Converters	
U536	SIM-74HC574S	Octal D Flip-Flops	
U538	SIA-TL072CPS	OP AMP Dual Low Noise	
U539	SIA-393S-1	Comparator Dual Low Power Low Offset	
U541	SIA-DG201S-1	QUAD Analog Switches	
U542	SIA-TL071CPS-1	OP AMP Low Noise	
U543	SIA-DG201S-1	QUAD Analog Switches	
U544	SIA-393S-1	Comparator Dual Low Power Low Offset	
U545	SIM-74HC4538S	Monostable Multivibrator	
U547	SIM-74HC08S	QUAD 2 INPUT POSI-AND	
U548	SHB-002610	Peak Detector	
U551	SIM-74HC74S	Dual D Filp-Flops With Preset and Clear	
X1	DXD-001898-11	CRYSTAL	
X2	DXD-001898-11	CRYSTAL	
X3	DXD-001898-11	CRYSTAL	
X4	DXD-001898-11	CRYSTAL	

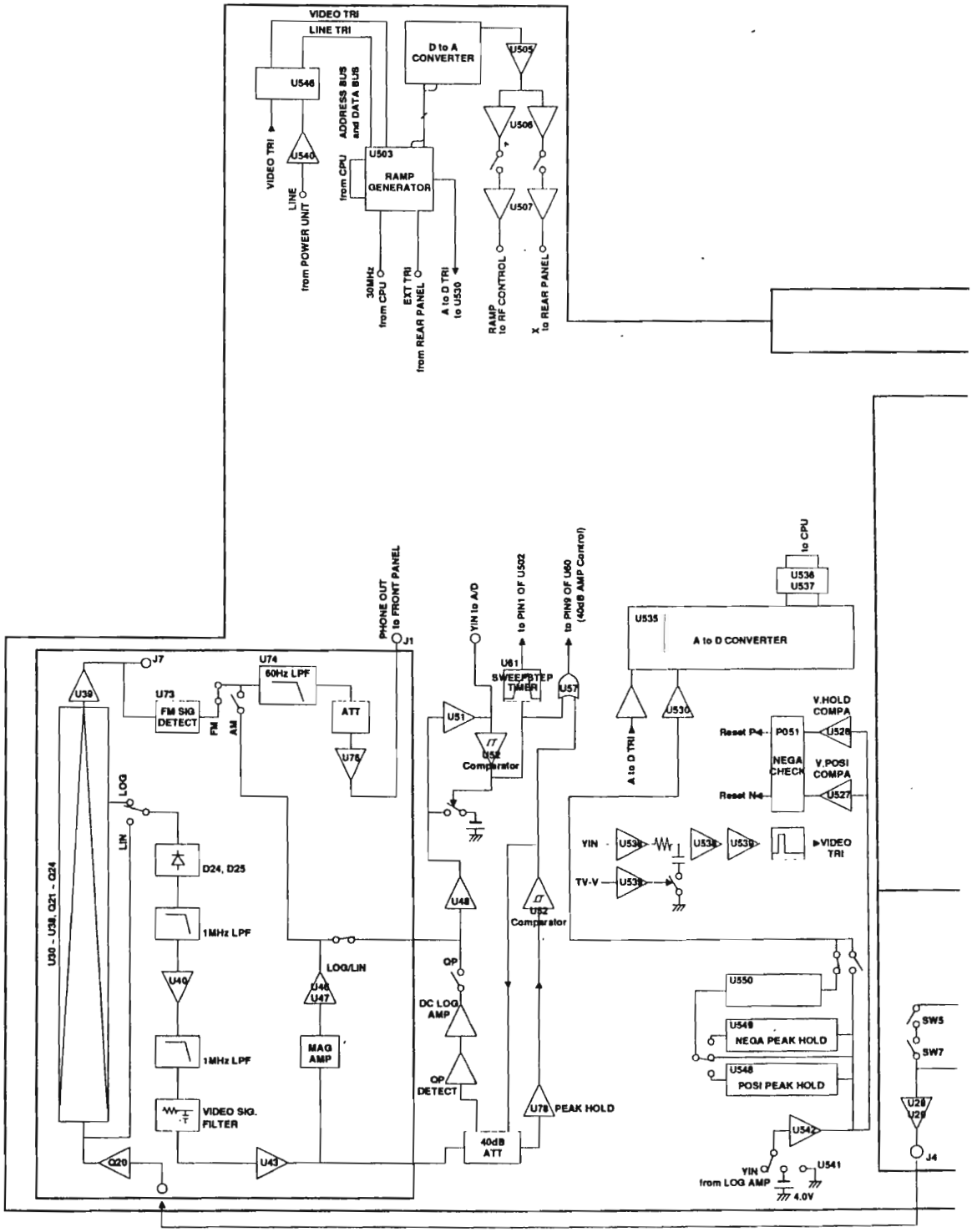
VIDEO TRI
LINE TRI
U546
VIDEO TRI
U540
LINE
from POWER UNIT
ADDRESS BUS and DATA BUS
from CPU
U503
RAMP GENERATOR
30MHz from CPU
EXT TRI from REAR PANEL
A to D TRI to U530
D to A CONVERTER
U505
U506
U507
RAMP to RF CONTROL
X to REAR PANEL
PHONE OUT to FRONT PANEL
J1
J7
U39
U73
FM SIG DETECT
FM
AM
U74
60Hz LPF
ATT
U76
LOG
LIN
D24, D25
1MHz LPF
U40
1MHz LPF
VIDEO SIG. FILTER
Q20
U43
LOG/LIN
U46
U47
MAG AMP
U30 - U38, Q21 - Q24
YIN to A/D
U51
U52 Comparator
U61 SWEEP/STEP TIMER
to PIN1 OF U502
to PIN9 OF U60 (40dB AMP Control)
U57
U48
OP
DC LOG AMP
OP DETECT
40dB ATT
U52 Comparator
U78 PEAK HOLD
to CPU
U536
U537
U535
A to D CONVERTER
A to D TRI
U530
V.HOLD COMPA
Reset P4
P051
U526
NEGA CHECK
V.POSI COMPA
Reset N4
U527
YIN
U538
U539
VIDEO TRI
TV-V
U550
U549
NEGA PEAK HOLD
U548
POSI PEAK HOLD
U542
YIN from LOG AMP
U541
4.0V
SW5
SW7
U28
U29
J4

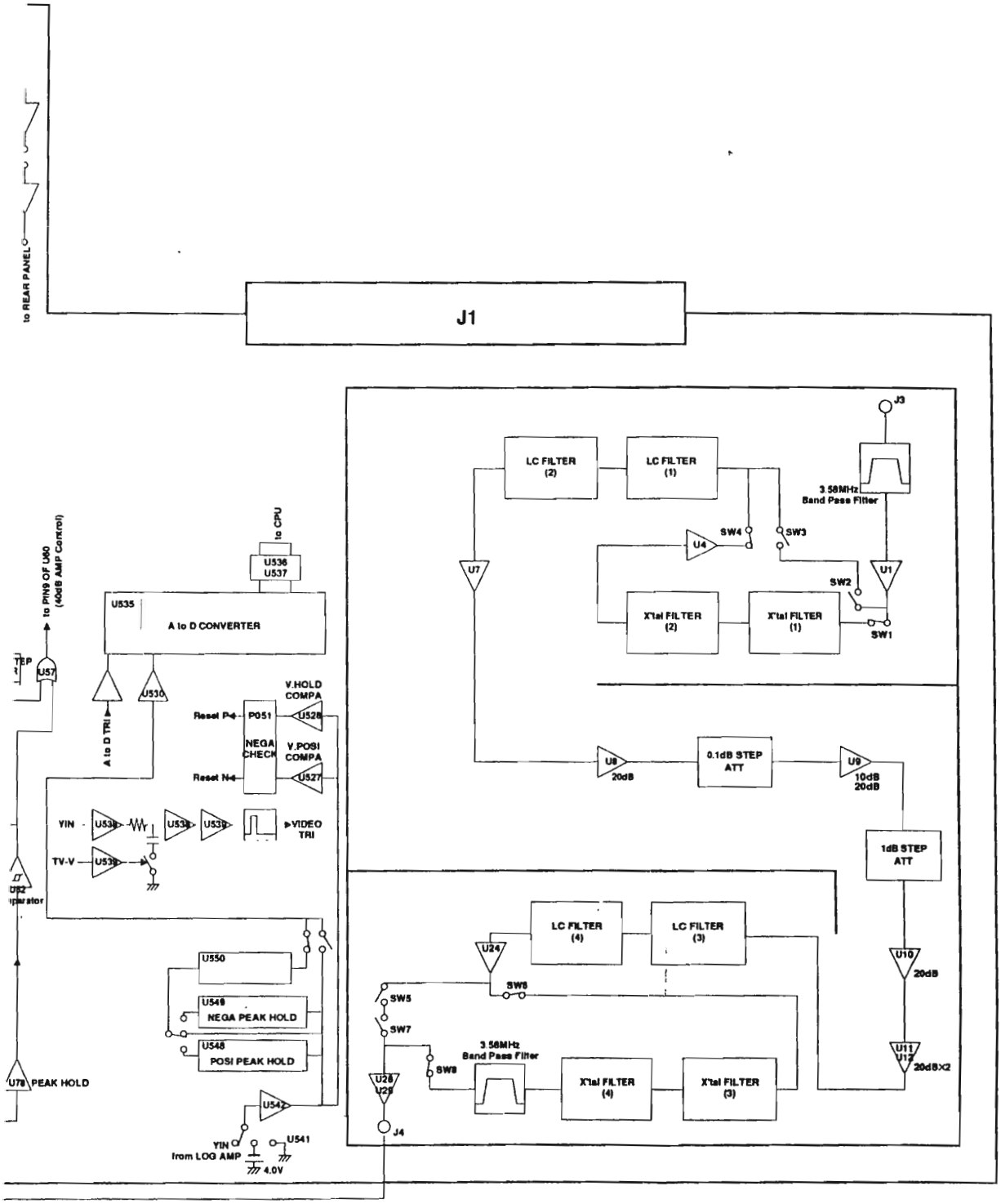

CIRCUIT LAYOUT
IF SECTION
BLQ-015668

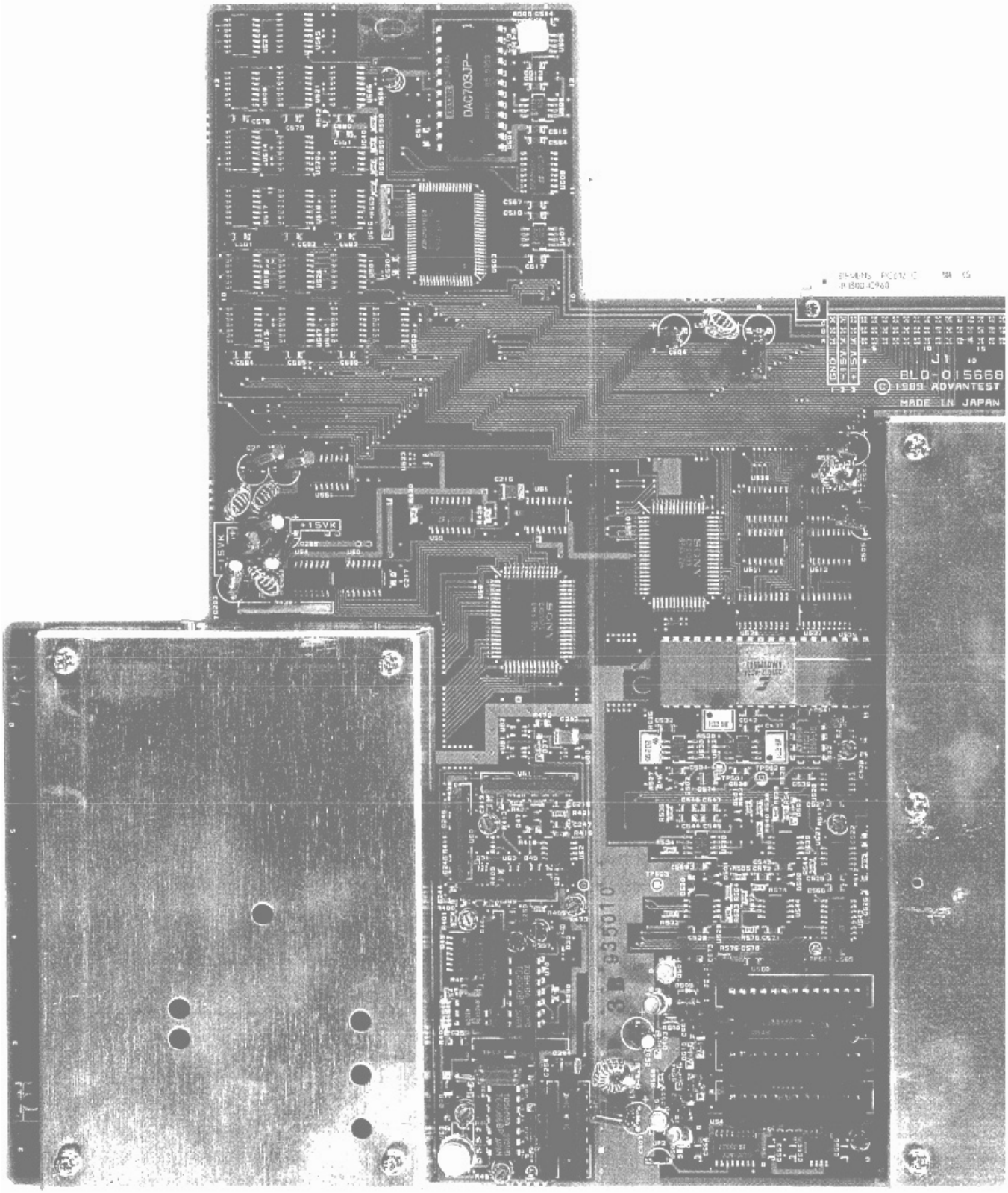
DAC703JP
BLD-015668
© 1989 ADVANTEST
MADE IN JAPAN
+15VK
-15VK

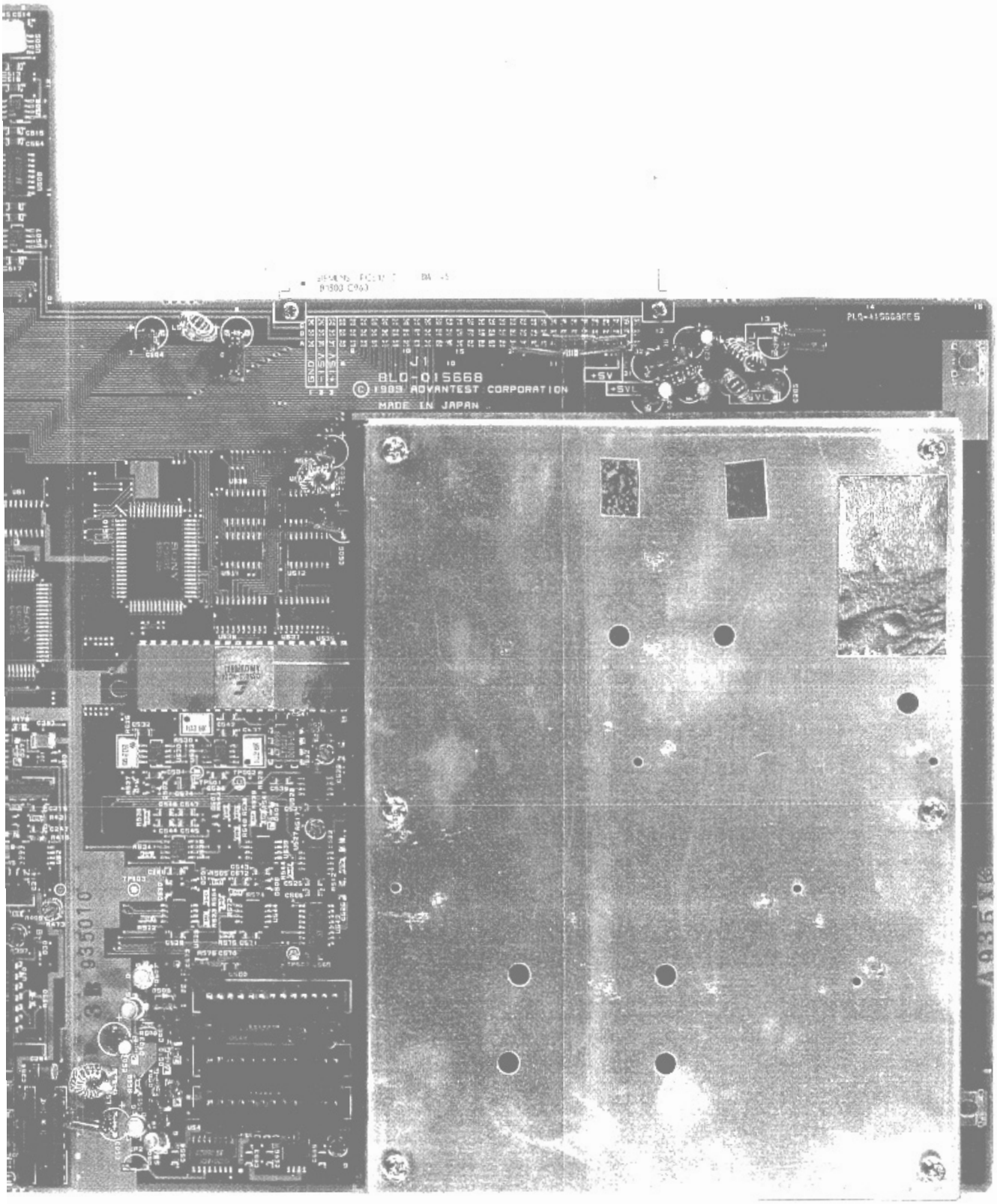

PARTS LOCATION
IF SECTION
BLQ-015668

1. DIAGRAMS ILLUSTRATION

1-1 SYMBOLS REFERENCE DESIGNATORS

1) IC PIN NAME (PIN-NAME OF NEGATIVE LOGIC ARE DISPLAYED BY SMALL LETTER)

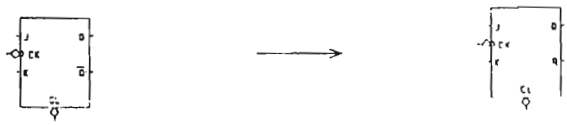

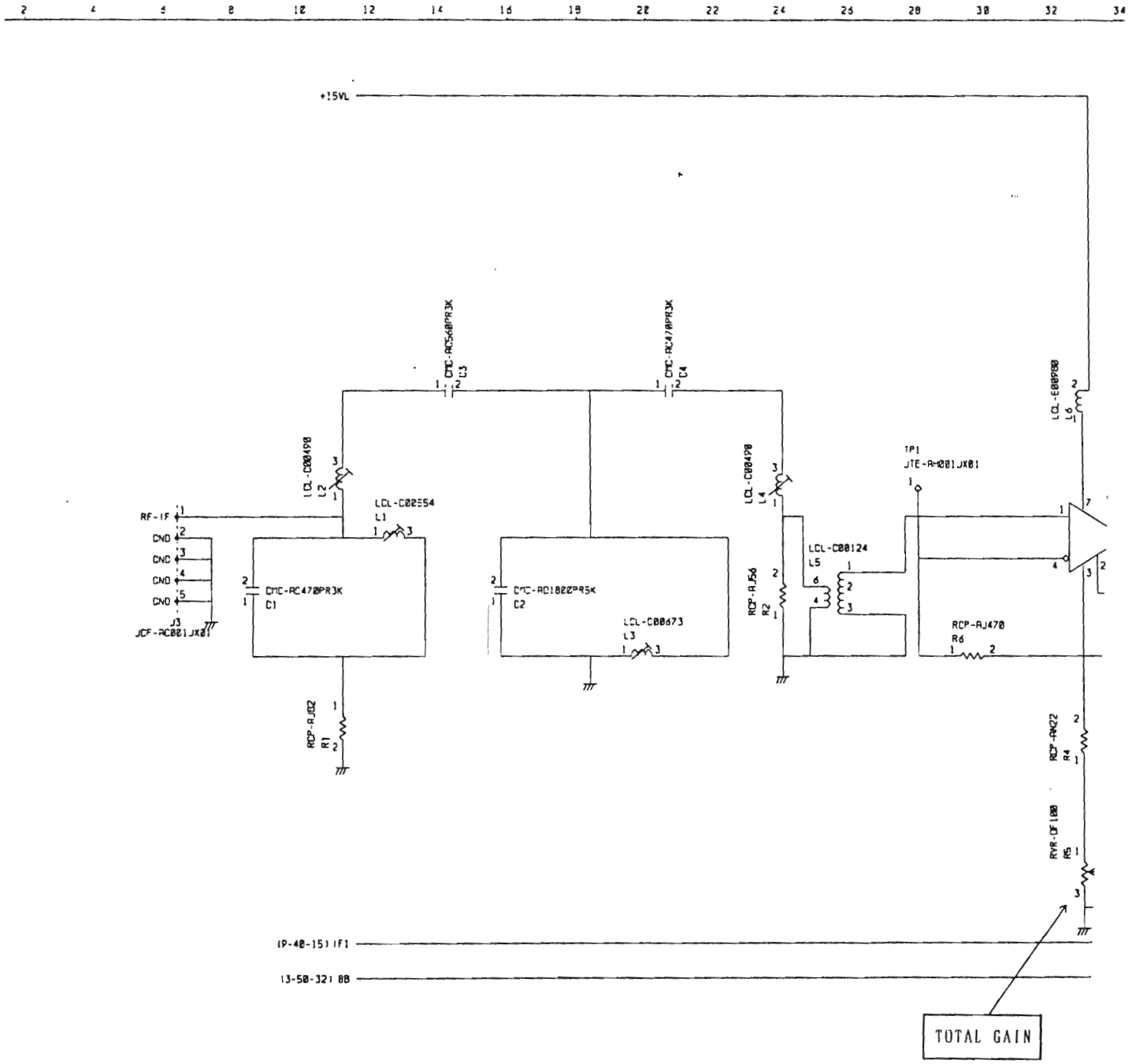
+15VL
CMC-RC560PR3K
C3
CMC-RC470PR3K
C4
LCL-C00490
L2
LCL-C02554
L1
RF-IF
GND
GND
GND
GND
J3
JCF-RC001JX01
CMC-RC470PR3K
C1
CMC-RC1802PR5K
C2
LCL-C00673
L3
RCP-RJ02
R1
LCL-C00490
L4
RCP-RJ56
R2
LCL-C00124
L5
TP1
JTE-RH001JX01
RCP-RJ470
R6
LCL-E00980
L6
RCP-RK22
R4
RVR-DF100
R5
(P-40-15) IF1
(3-50-32) BB
TOTAL GAIN

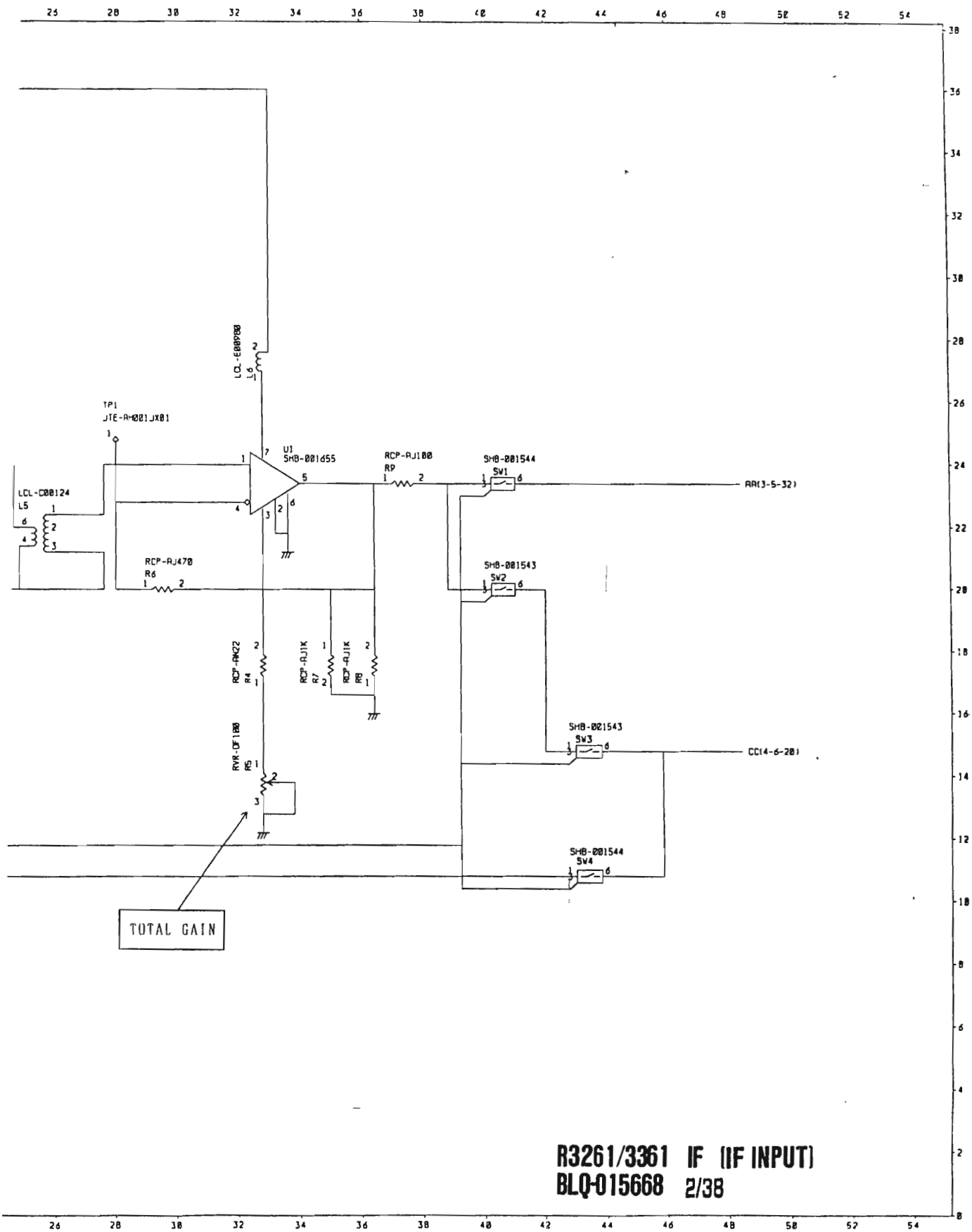

R3261/3361 IF (IF INPUT)
BLQ-015668 2/38

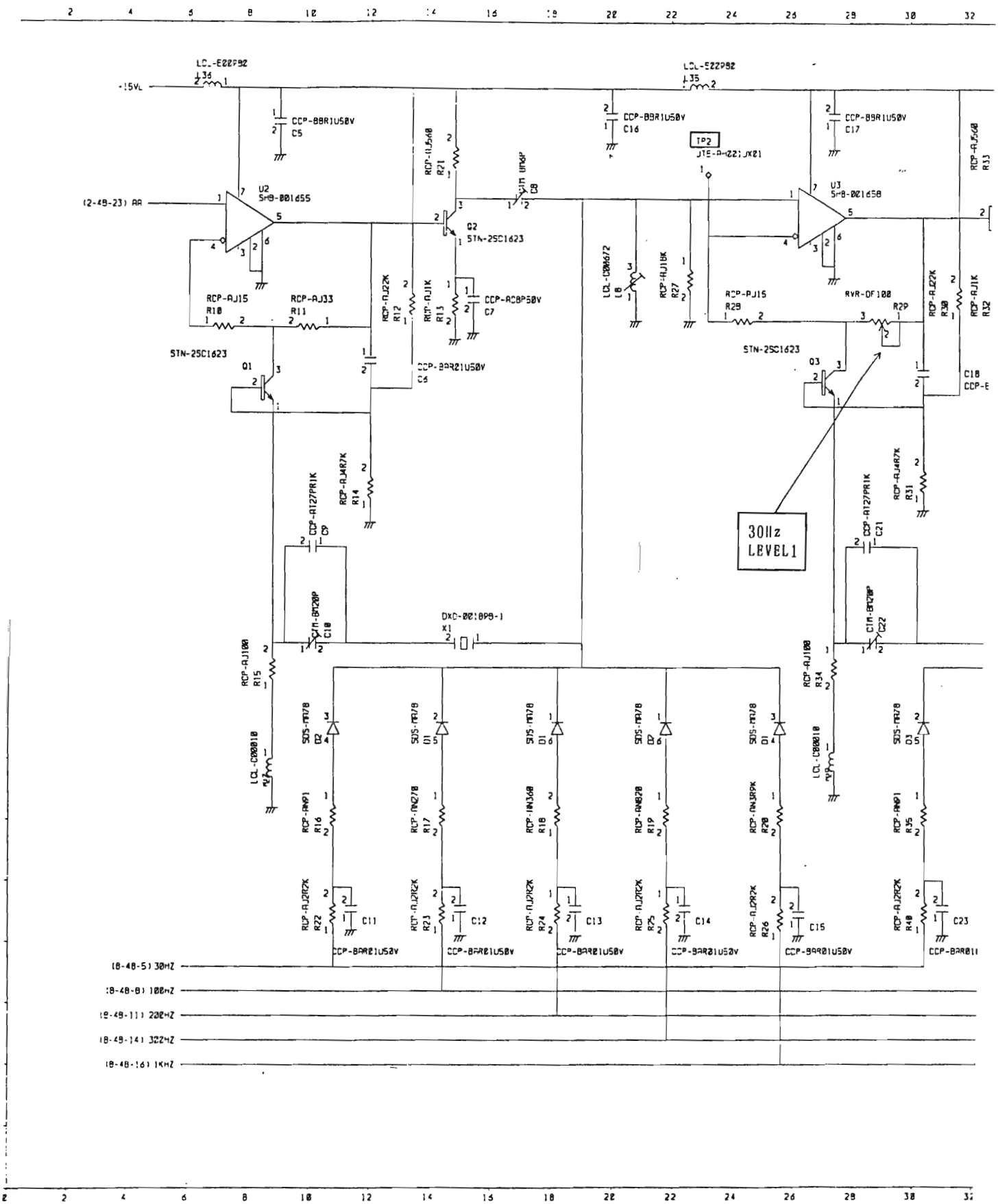
+15VL
LCL-E22P82
L36
LCL-S22P82
L35
CCP-B8R1U50V
C5
CCP-B9R1U50V
C16
CCP-B9R1U50V
C17
TP2
JTE-A-122;JX21
U2
5H8-001655
U3
5H8-001658
(2-48-23) AA
Q2
STN-2SC1623
Q1
STN-2SC1623
Q3
STN-2SC1623
RCP-AJ15
R10
RCP-AJ33
R11
RCP-AJ22K
R12
RCP-AJ1K
R13
CCP-AC8P50V
C7
RCP-AJ15
R28
RVR-DF100
R29
RCP-AJ22K
R30
RCP-AJ1K
R32
RCP-AJ56B
R33
RCP-AJ4R7K
R14
RCP-AJ4R7K
R31
CCP-A127PR1K
C9
CCP-A127PR1K
C21
30Hz
LEVEL1
DXC-001PP8-1
X1
RCP-AJ100
R15
RCP-AJ100
R34
LCL-C00010
LCL-C00010
SDS-M078
D2
SDS-M078
D1
SDS-M078
D6
SDS-M078
D4
SDS-M078
D5
RCP-AN91
R16
RCP-AN278
R17
RCP-AN368
R18
RCP-AN828
R19
RCP-AN3RPK
R20
RCP-AN91
R35
RCP-AJ2R2K
R22
RCP-AJ2R2K
R23
RCP-AJ2R2K
R24
RCP-AJ2R2K
R25
RCP-AJ2R2K
R26
RCP-AJ2R2K
R40
C11
C12
C13
C14
C15
C23
CCP-B8R01U50V
(8-48-5) 30HZ
(8-48-8) 100HZ
(8-48-11) 200HZ
(8-48-14) 320HZ
(8-48-16) 1KHZ

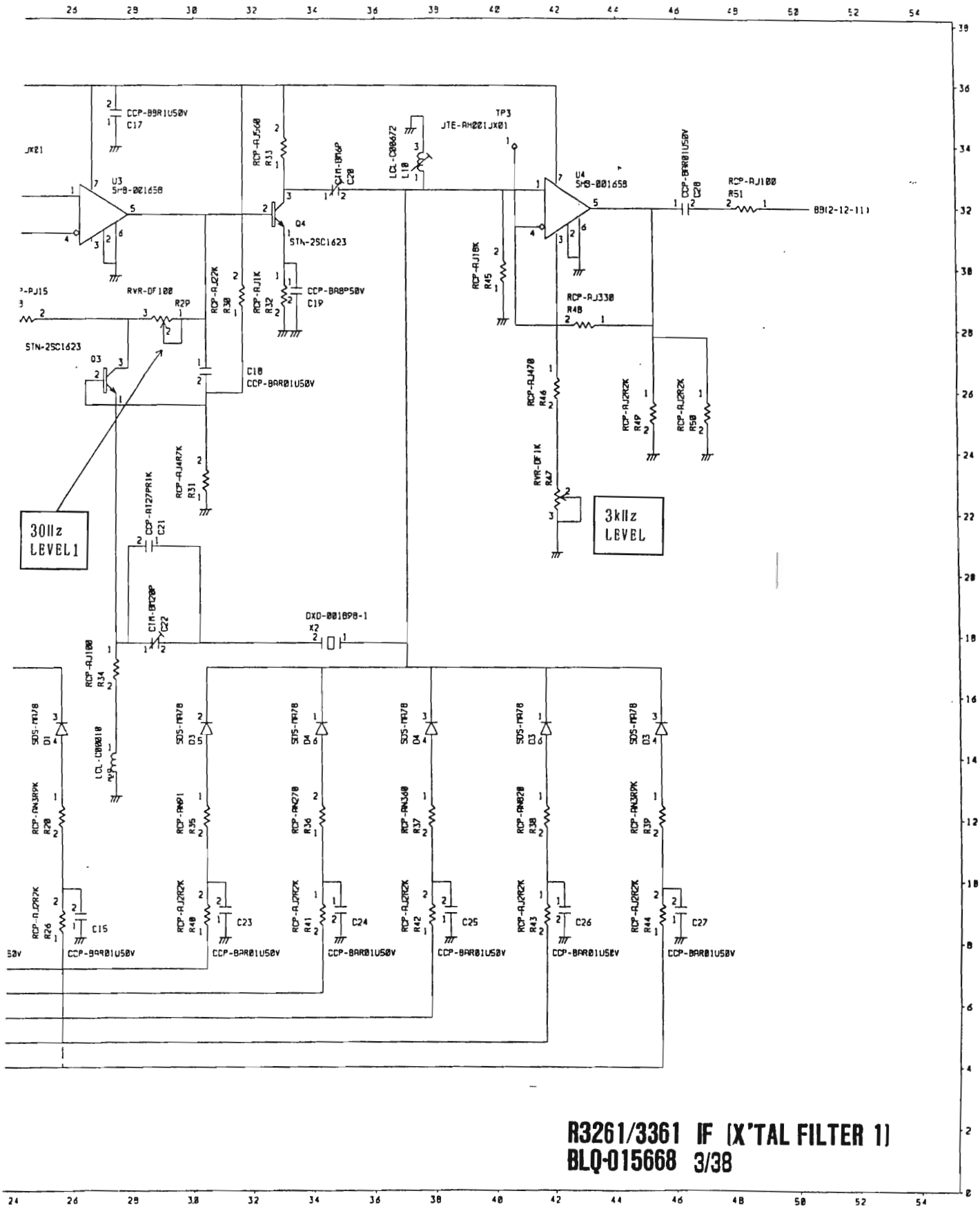

R3261/3361 IF (X'TAL FILTER 1)
BLQ-015668 3/38

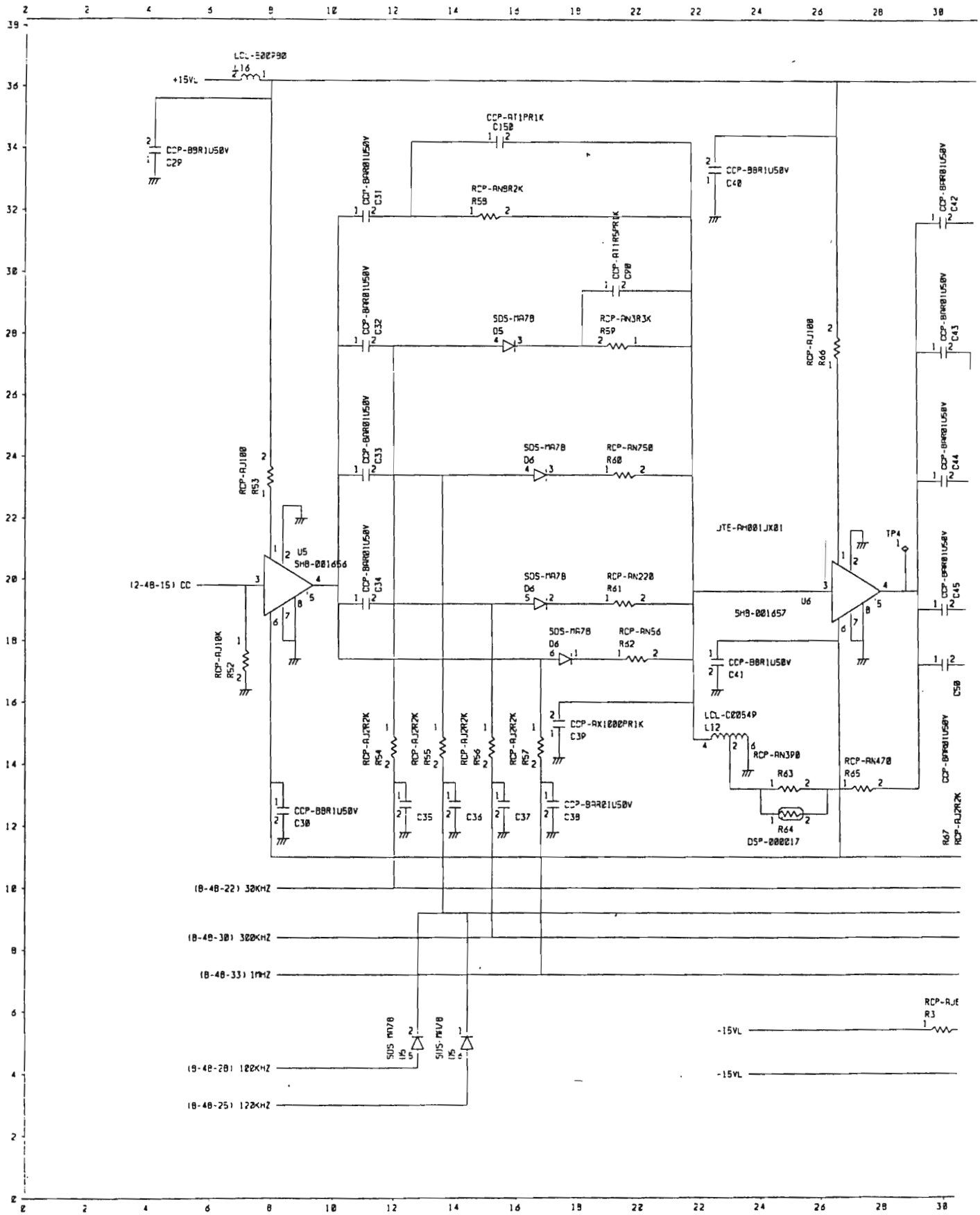
+15VL
LCL-E00F90
L16
CCP-B9R1U50V
C29
CCP-AT1PR1K
C150
CCP-BAR01U50V
C31
RCP-AN8R2K
R59
CCP-BBR1U50V
C40
CCP-BAR01U50V
C42
CCP-A11R5PR1K
C98
CCP-BAR01U50V
C32
SDS-MA78
D5
RCP-AN3R3K
R59
RCP-RJ100
R66
CCP-BAR01U50V
C43
CCP-BAR01U50V
C33
SDS-MA78
D6
RCP-AN750
R60
RCP-RJ100
R53
CCP-BAR01U50V
C44
JTE-AH001JX01
TP4
U5
SHB-001656
CCP-BAR01U50V
C34
SDS-MA78
D6
RCP-AN220
R61
(2-4B-15) CC
U6
SHB-001657
CCP-BAR01U50V
C45
SDS-MA78
D6
RCP-AN56
R62
RCP-RJ10K
R52
CCP-BBR1U50V
C41
C58
CCP-AX1000PR1K
C39
LCL-C00549
L12
RCP-RJ2R2K
R54
RCP-RJ2R2K
R55
RCP-RJ2R2K
R56
RCP-RJ2R2K
R57
RCP-AN390
R63
RCP-AN470
R65
CCP-BBR1U50V
C30
C35
C36
C37
CCP-BAR01U50V
C38
R64
DSP-000217
CCP-BAR01U50V
R67
RCP-RJ2R2K
(B-4B-22) 32KHZ
(B-4B-30) 300KHZ
(B-4B-33) 1MHZ
SDS-MA78
SDS-MA78
RCP-RJE
R3
-15VL
-15VL
(B-4B-28) 100KHZ
(B-4B-25) 120KHZ

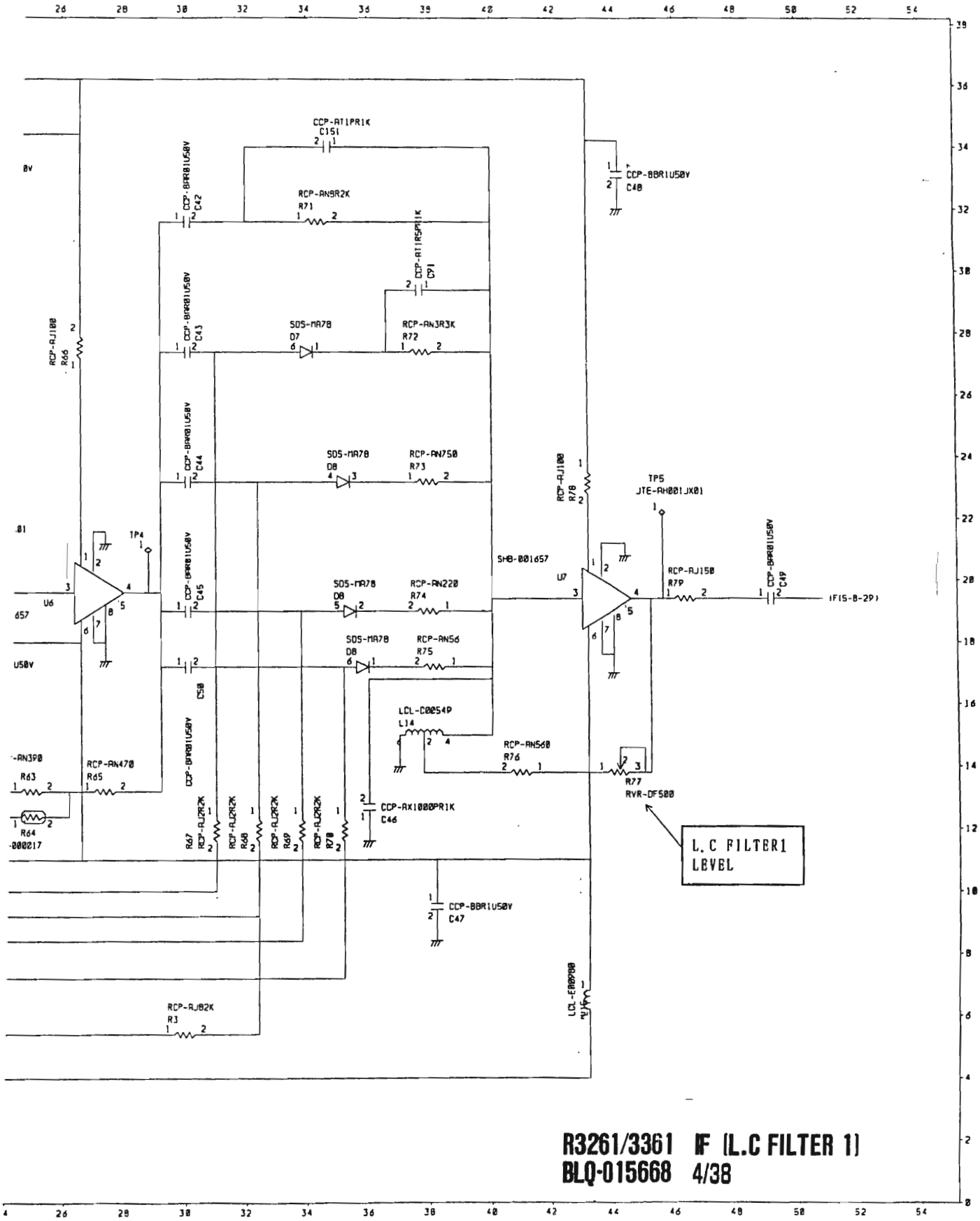
CCP-AT1PR1K
C151
CCP-BBR1U50V
C42
RCP-AN8R2K
R71
CCP-AT1R5PR1K
C91
CCP-BBR1U50V
C43
SDS-MA78
D7
RCP-AN3R3K
R72
RCP-AJ100
R66
CCP-BBR1U50V
C44
SDS-MA78
D8
RCP-AN750
R73
CCP-BBR1U50V
C45
SDS-MA78
D8
RCP-AN220
R74
SDS-MA78
D8
RCP-AN56
R75
C50
CCP-BBR1U50V
LCL-C0054P
L14
RCP-AN560
R76
RCP-AN470
R65
R63
R64
RCP-AJ2R2K
R67
RCP-AJ2R2K
R68
RCP-AJ2R2K
R69
RCP-AJ2R2K
R70
CCP-AX1000PR1K
C46
CCP-BBR1U50V
C47
RCP-AJ82K
R3
LCL-E0090
L4
CCP-BBR1U50V
C48
RCP-AJ100
R78
TP5
JTE-AH001JX01
SMB-001657
U7
RCP-AJ150
R79
CCP-BBR1U50V
C49
(FIS-B-29)
R77
RVR-DF500
L.C FILTER1
LEVEL
TP4
U6
R3261/3361 IF (L.C FILTER 1)
BLQ-015668 4/38

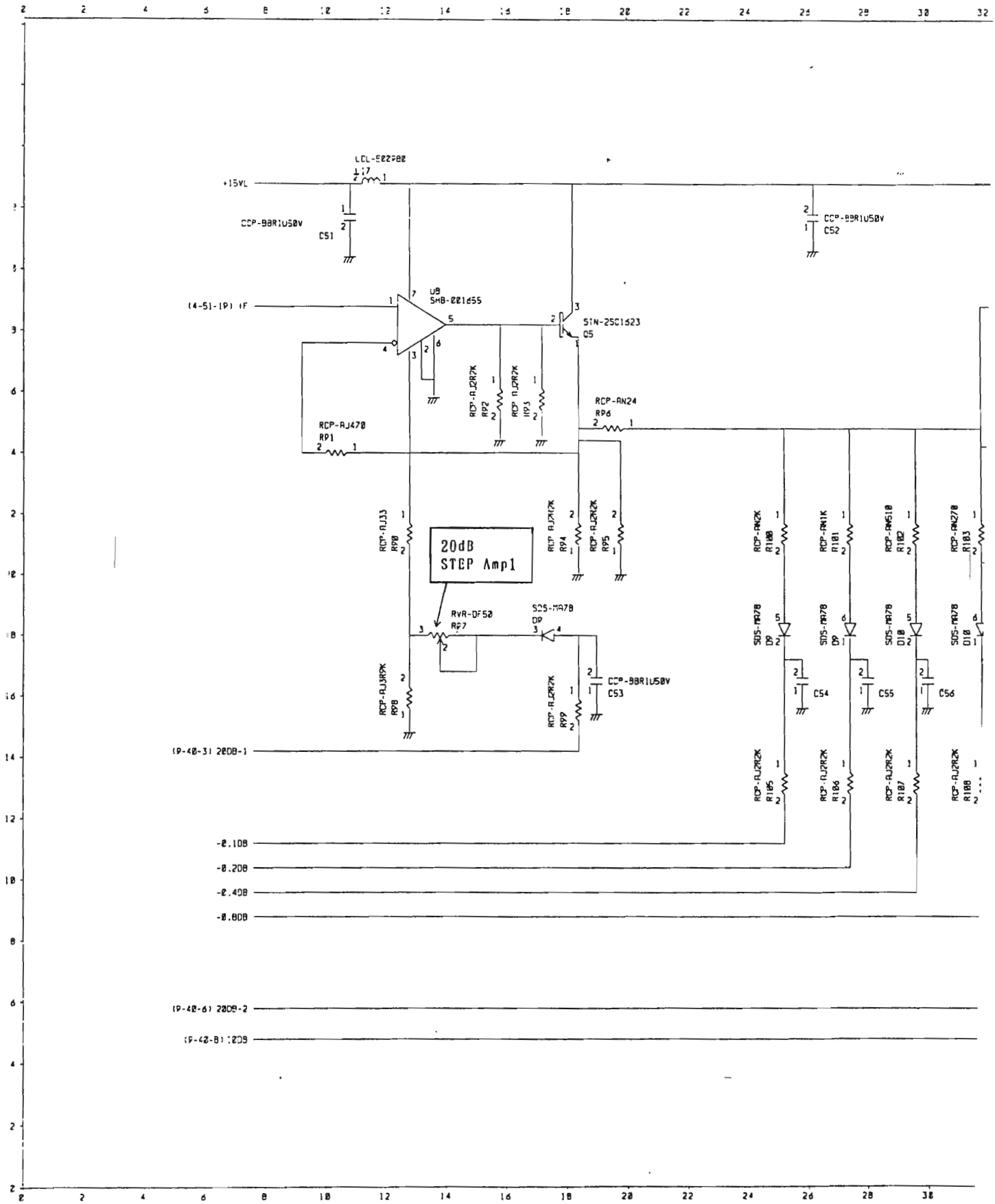
+15VL
LCL-E22580
CCP-B8R1U50V
C51
C52
U8
SMB-201655
(4-51-19) IF
SIN-2SC1623
Q5
RCP-AJ2R2K
RP2
RP3
RCP-AN24
RP6
RCP-AJ470
RP1
RCP-AJ33
RP0
RP4
RP5
20dB
STEP Ampl
RVR-DF50
RP7
SDS-MA78
DP
CCP-B8R1U50V
C53
RCP-AJ3R9K
RP8
RP9
RCP-AN2K
R100
RCP-AN1K
R101
RCP-AN510
R102
RCP-AN270
R103
D9
D10
C54
C55
C56
(9-40-3) 20DB-1
R105
R106
R107
R108
-0.1DB
-0.2DB
-0.4DB
-0.8DB
(9-40-6) 20DB-2
(9-40-8) 20DB

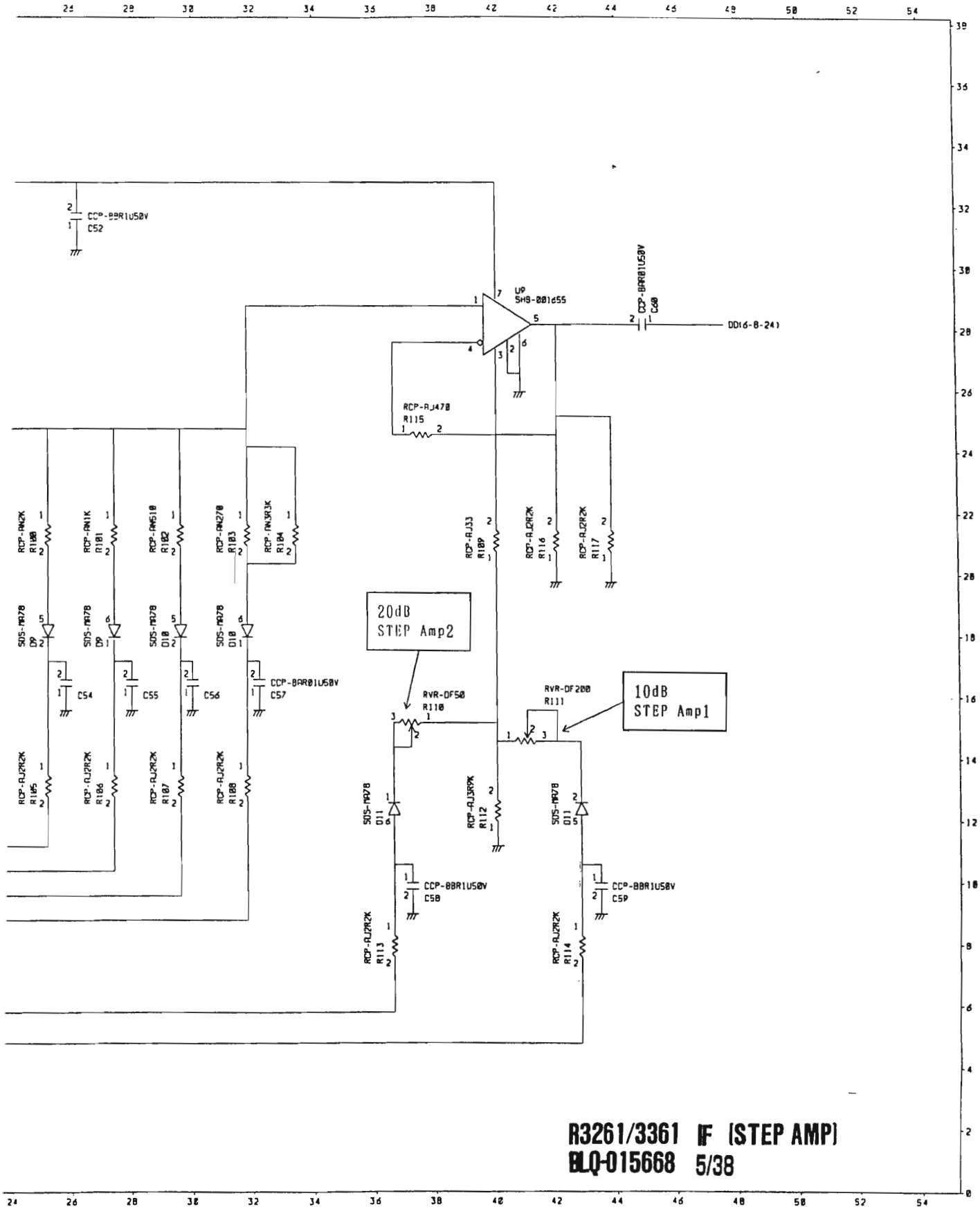

R3261/3361 IF (STEP AMP)
BLQ-015668 5/38

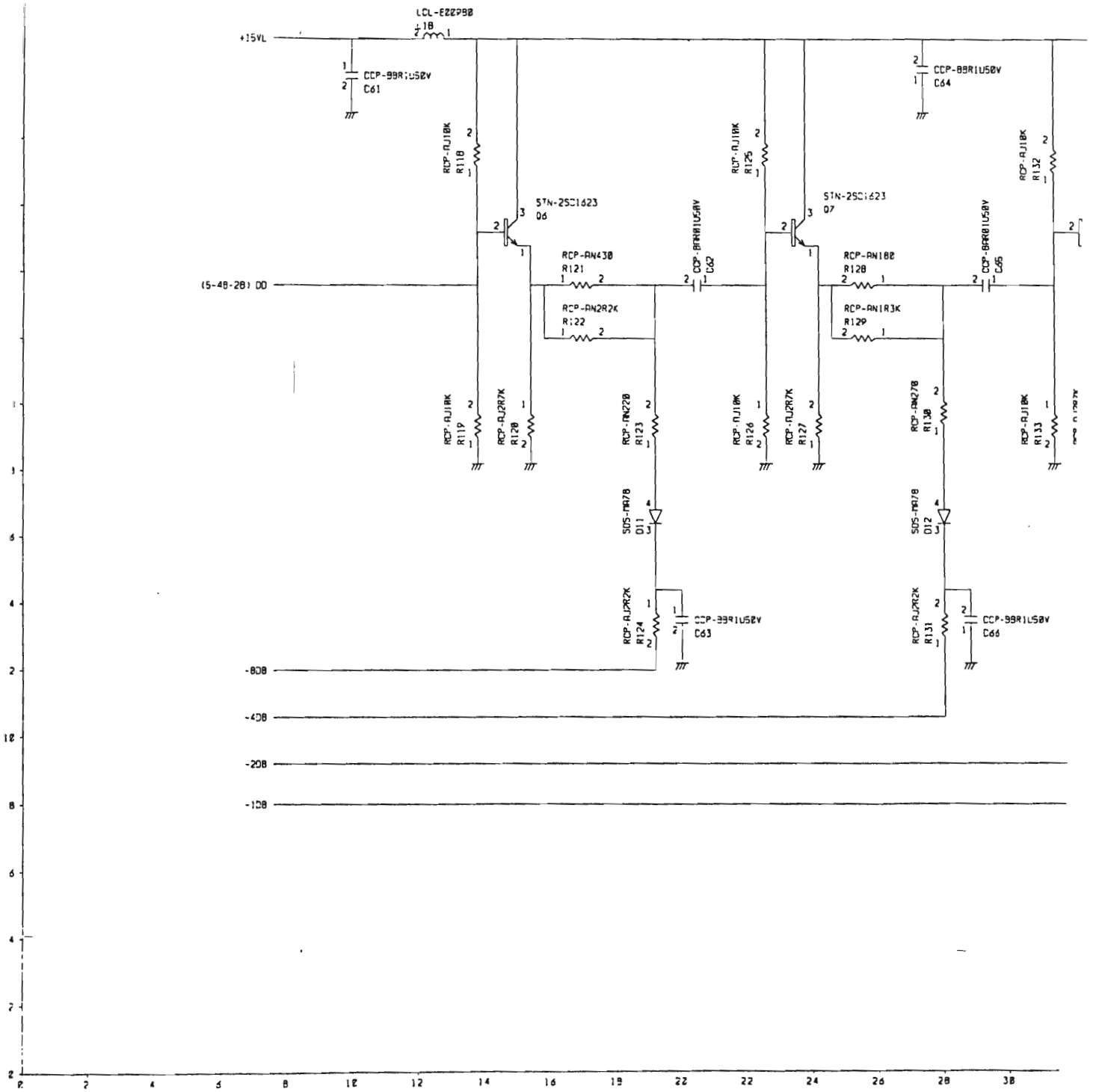
LCL-EZZPBØ
+15VL
CCP-99R1U50V
C61
CCP-99R1U50V
C64
RCP-AJ10K
R118
RCP-AJ10K
R125
RCP-AJ10K
R132
STN-2SC1623
Q6
STN-2SC1623
Q7
CCP-BRR01U50V
C62
CCP-BRR01U50V
C65
RCP-AN430
R121
RCP-AN180
R128
(5-48-28) DD
RCP-AN2R2K
R122
RCP-AN1R3K
R129
RCP-AJ10K
R119
RCP-AJ2R7K
R120
RCP-AN220
R123
RCP-AJ10K
R126
RCP-AJ2R7K
R127
RCP-AN270
R130
RCP-AJ10K
R133
SDS-RN78
D11
SDS-RN78
D12
RCP-AJ2R2K
R124
CCP-99R1U50V
C63
RCP-AJ2R2K
R131
CCP-99R1U50V
C66
-80D
-40D
-20D
-10D

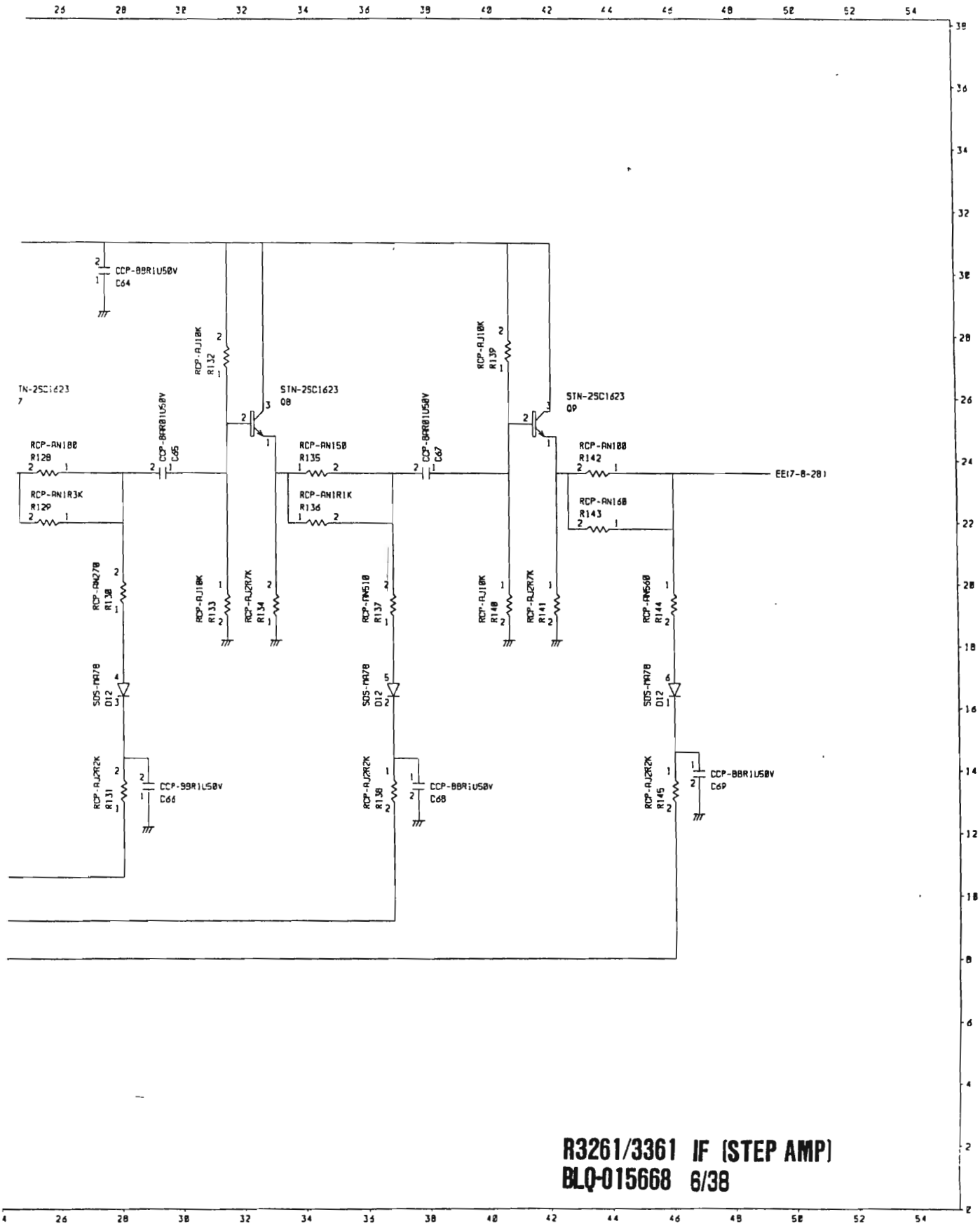

R3261/3361 IF (STEP AMP)
BLQ-015668 6/38

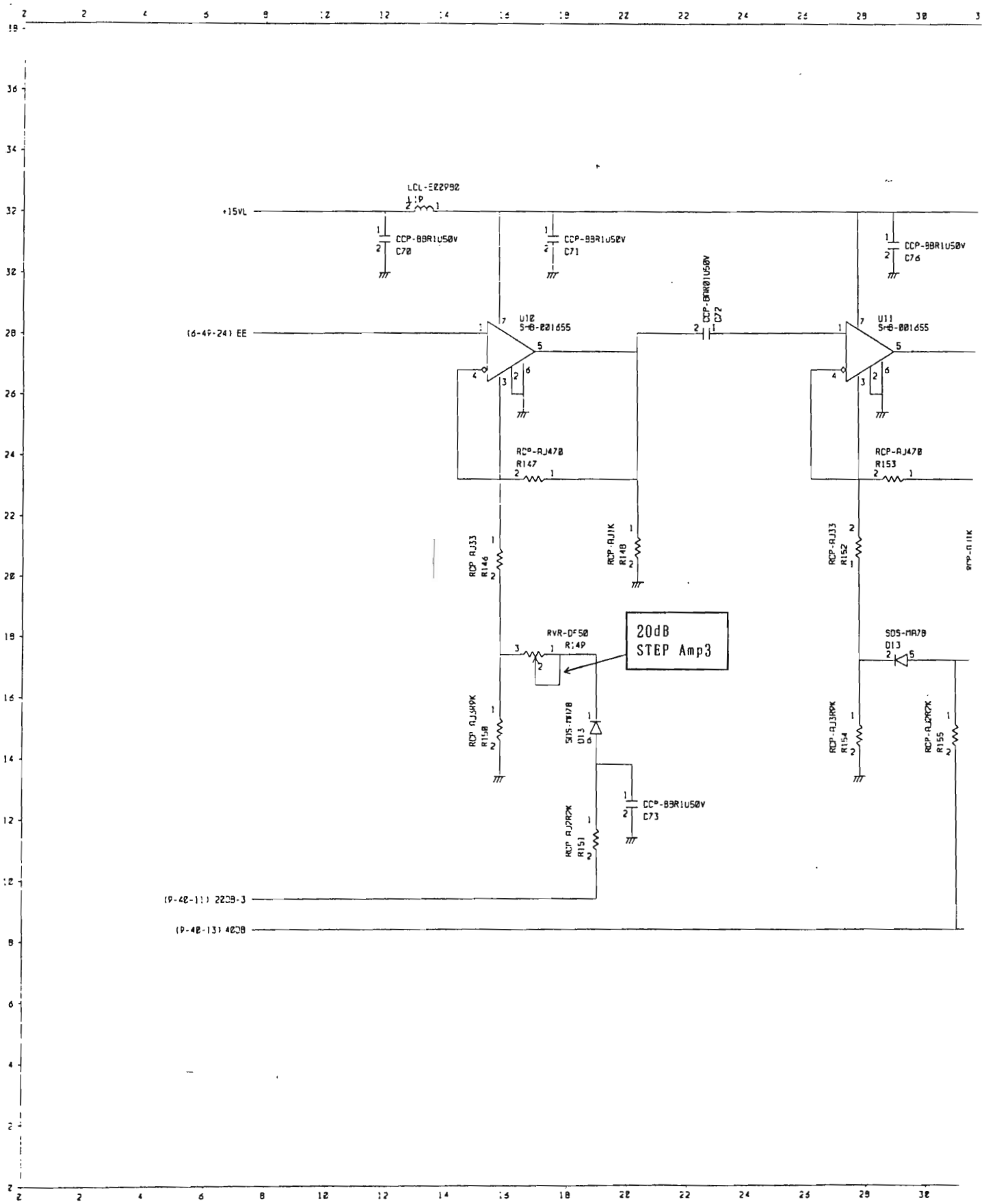
+15VL
LCL-E22992
CCP-BBR1U50V
C70
CCP-BBR1U50V
C71
CCP-BBR1U50V
C76
(6-49-24) EE
U10
S-8-001655
U11
S-8-001655
CCP-BBR01U50V
C72
RCP-AJ470
R147
RCP-AJ470
R153
RCP-AJ33
R146
RCP-AJ1K
R148
RCP-AJ33
R152
RVR-DF50
R149
20dB
STEP Amp3
SDS-MA78
D13
SDS-MA78
D13
RCP-AJ3R9K
R154
RCP-AJ2R2K
R155
RCP-AJ3R9K
R158
CCP-BBR1U50V
C73
RCP-AJ2R2K
R151
(9-40-11) 2209-3
(9-40-13) 4209

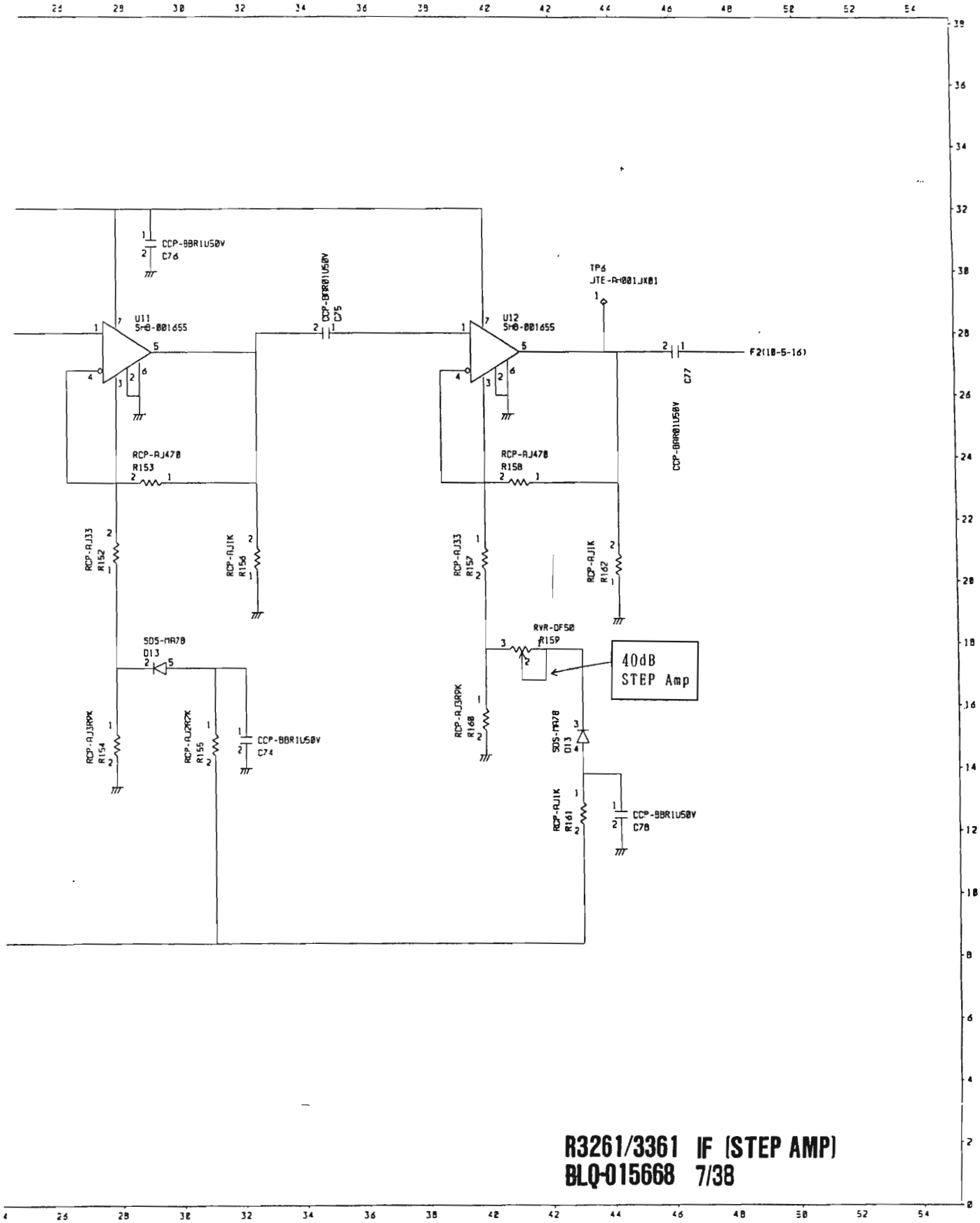

R3261/3361 IF (STEP AMP)
BLQ-015668 7/38

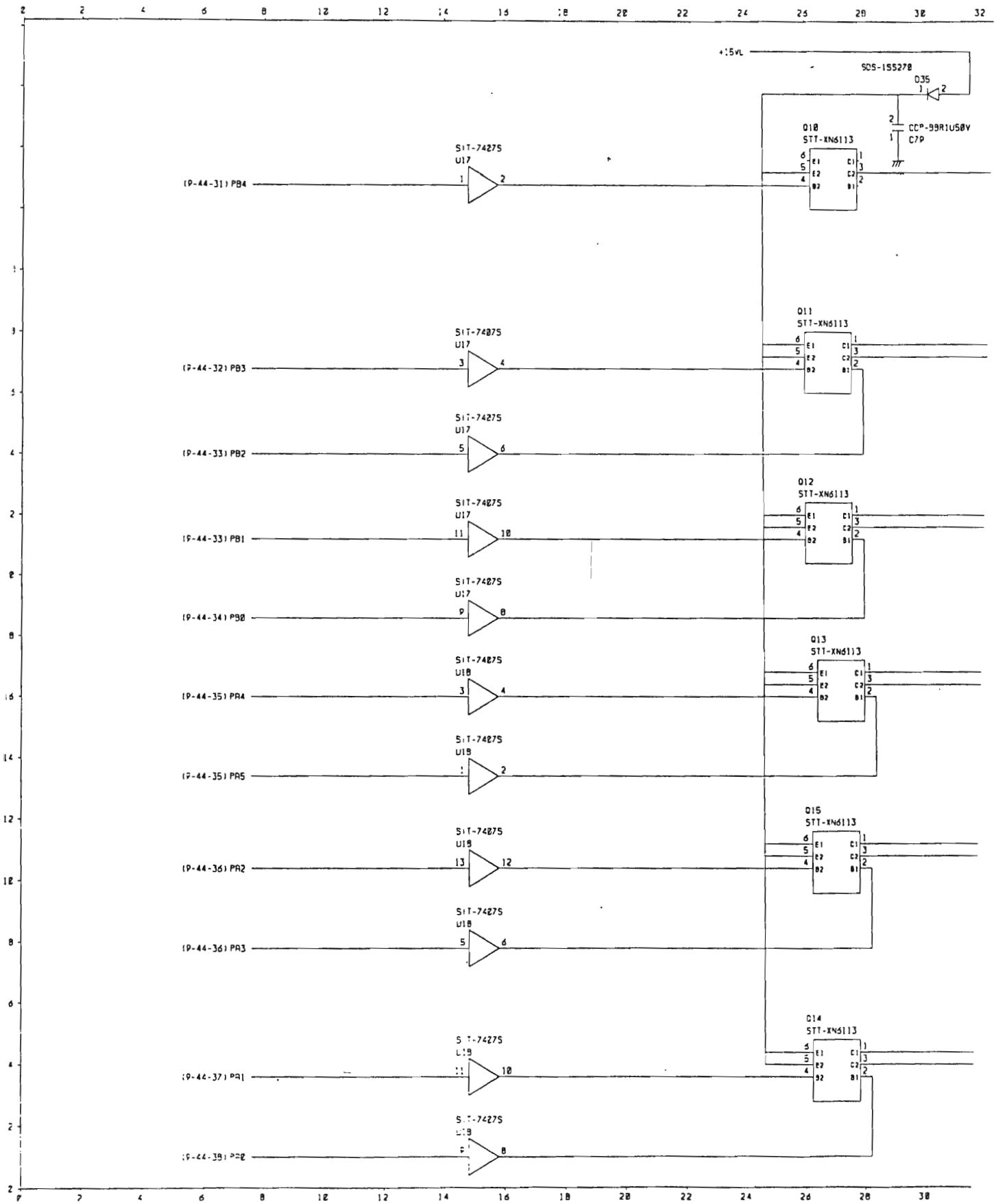
+15VL
SDS-1SS270
D35
CCP-99R1U50V
C79
Q10
STT-XN6113
SIT-7427S
U17
(9-44-31) PB4
Q11
STT-XN6113
(9-44-32) PB3
(9-44-33) PB2
Q12
STT-XN6113
(9-44-33) PB1
(9-44-34) PB0
Q13
STT-XN6113
U18
(9-44-35) PA4
(9-44-35) PA5
Q15
STT-XN6113
(9-44-36) PA2
(9-44-36) PA3
Q14
STT-XN6113
U19
(9-44-37) PA1
(9-44-38) PA0

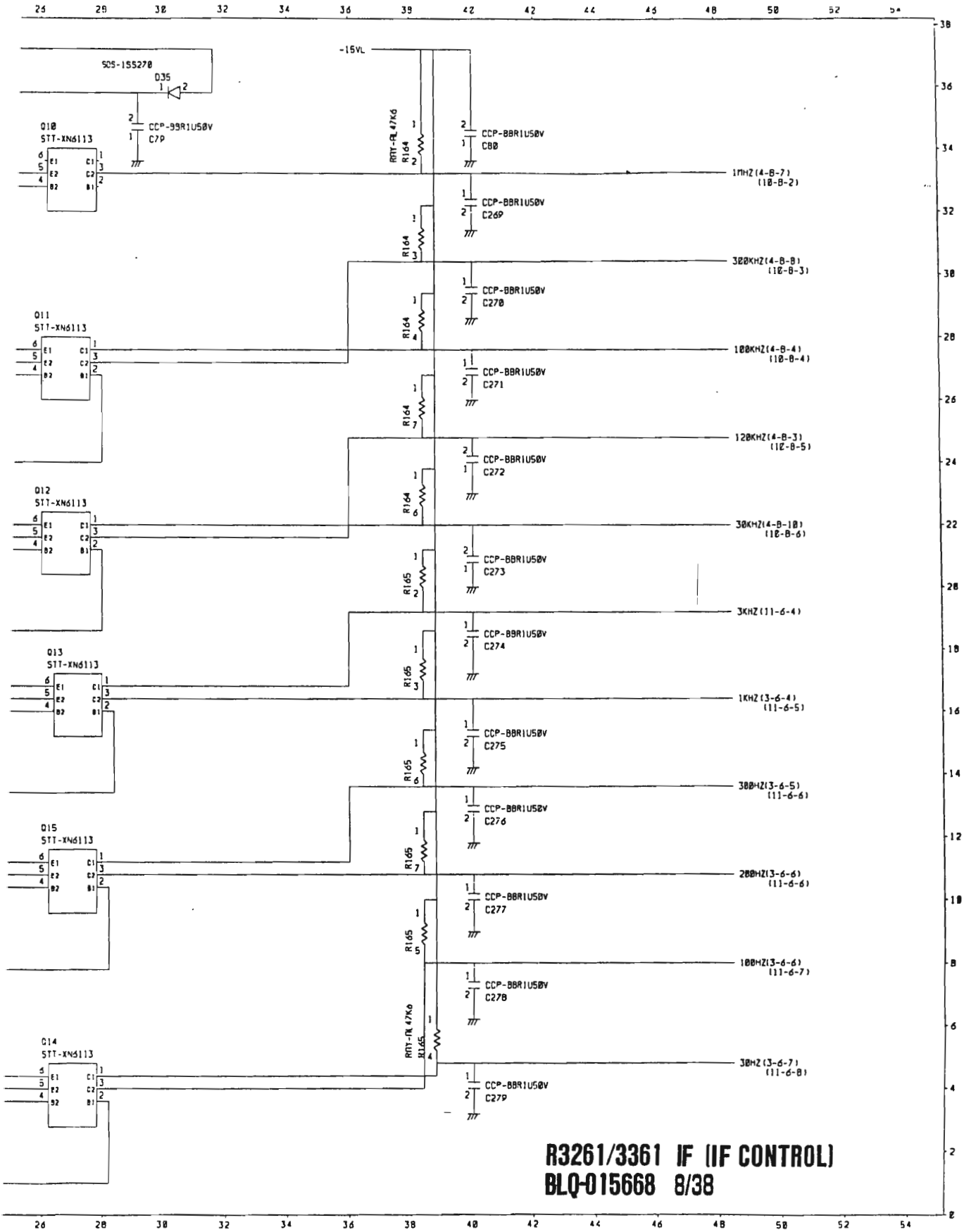

R3261/3361 IF (IF CONTROL)
BLQ-015668 8/38

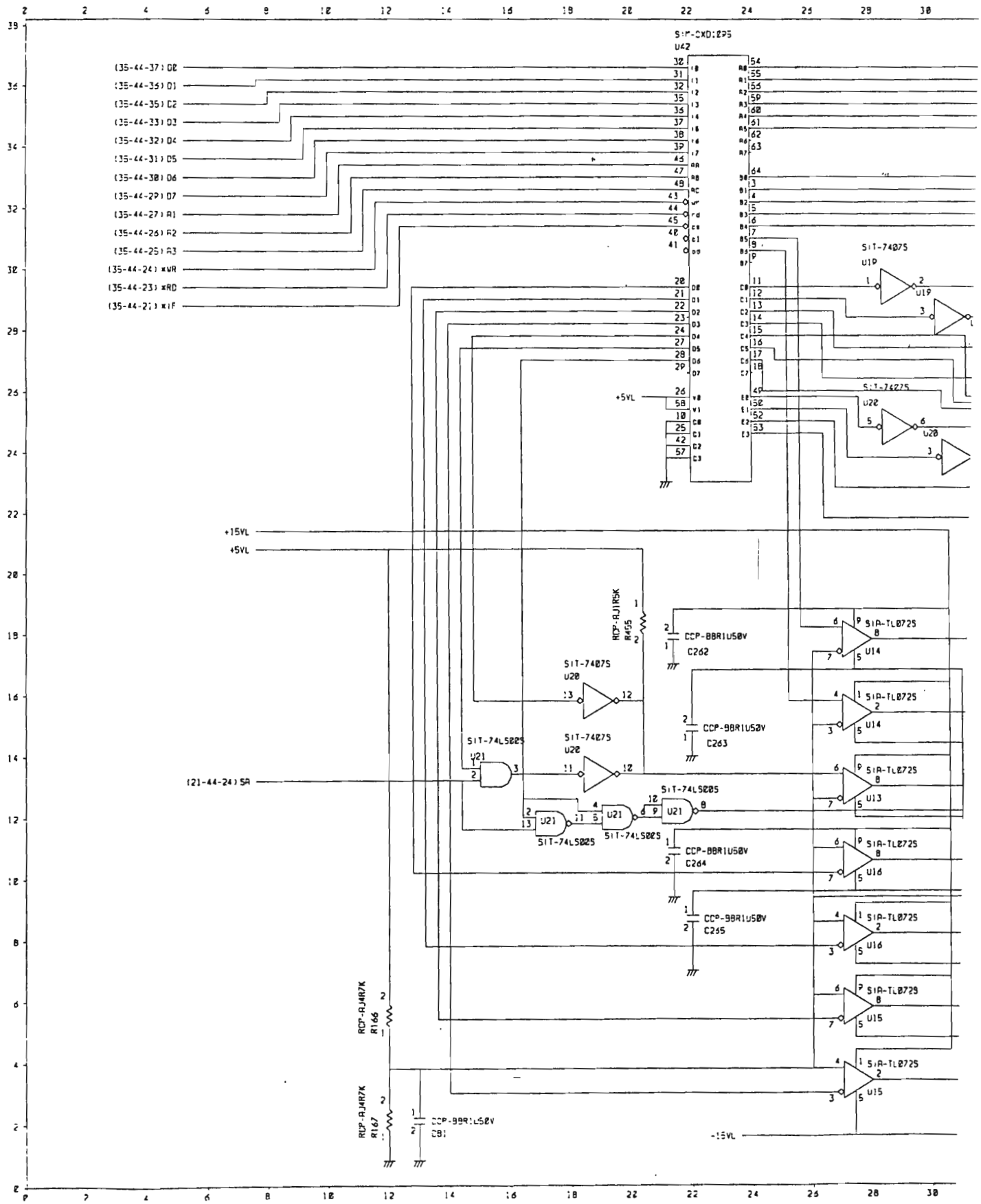
(35-44-37) D0
(35-44-36) D1
(35-44-35) D2
(35-44-33) D3
(35-44-32) D4
(35-44-31) D5
(35-44-30) D6
(35-44-29) D7
(35-44-27) A1
(35-44-26) A2
(35-44-25) A3
(35-44-24) xWR
(35-44-23) xRD
(35-44-21) xIF
U42
+5VL
+15VL
+5VL
(21-44-24) SA
U21
SIT-74LS02S
SIT-74LS02S
SIT-74LS02S
SIT-74LS02S
U20
SIT-74O7S
U20
SIT-74O7S
U20
SIT-74O7S
U19
SIT-74O7S
U22
SIT-74O7S
U20
RCP-RJ1R5K
R455
CCP-BBR1U50V
C262
CCP-BBR1U50V
C263
CCP-BBR1U50V
C264
CCP-BBR1U50V
C265
SIA-TL072S
U14
SIA-TL072S
U14
SIA-TL072S
U13
SIA-TL072S
U16
SIA-TL072S
U16
SIA-TL072S
U15
SIA-TL072S
U15
RCP-RJ4R7K
R166
RCP-RJ4R7K
R167
CCP-BBR1U50V
C81
-15VL

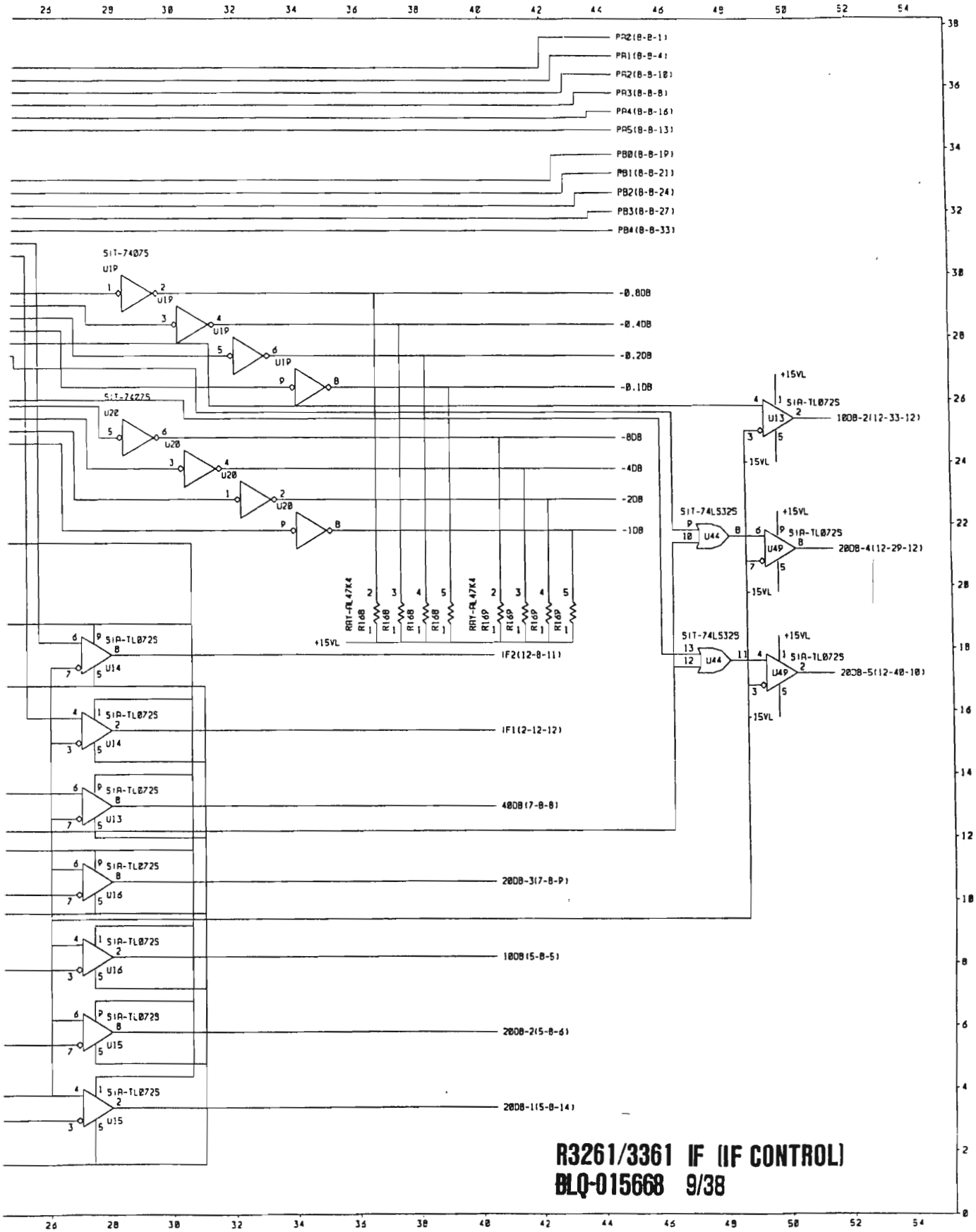

R3261/3361 IF (IF CONTROL)
BLQ-015668 9/38

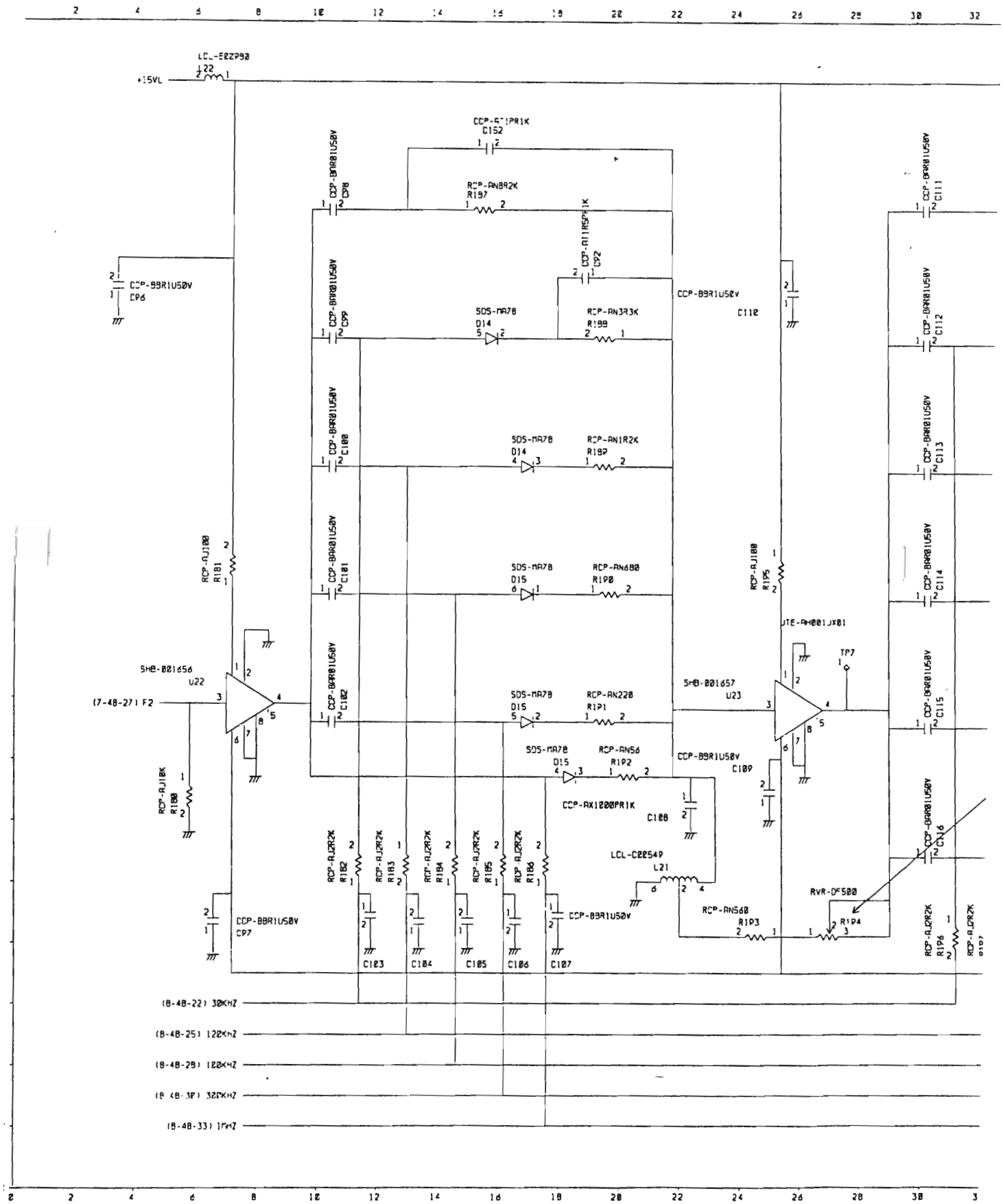
+15VL
LCL-E02290
L22
CCP-B8R1U50V
CP6
CCP-B8R01U50V
CP8
CCP-B8R01U50V
CP9
CCP-B8R01U50V
C100
CCP-B8R01U50V
C101
CCP-B8R01U50V
C102
CCP-B8R01U50V
C111
CCP-B8R01U50V
C112
CCP-B8R01U50V
C113
CCP-B8R01U50V
C114
CCP-B8R01U50V
C115
CCP-B8R01U50V
C116
CCP-B8R1U50V
C112
CCP-B8R1U50V
C109
CCP-B8R1U50V
C108
CCP-B8R1U50V
CP7
CCP-B8R1U50V
C107
CCP-G11PR1K
C152
RCP-AN8R2K
R197
CCP-A11R5PR1K
CP2
SDS-MA78
D14
RCP-AN3R3K
R199
SDS-MA78
D14
RCP-AN1R2K
R189
SDS-MA78
D15
RCP-AN680
R190
SDS-MA78
D15
RCP-AN220
R191
SDS-MA78
D15
RCP-AN56
R192
CCP-AX1000PR1K
RCP-AJ100
R181
RCP-AJ100
R195
RCP-AJ18K
R180
RCP-AJ2R2K
R182
RCP-AJ2R2K
R183
RCP-AJ2R2K
R184
RCP-AJ2R2K
R185
RCP-AJ2R2K
R186
LCL-C02549
L21
RCP-AN560
R193
RVR-DF500
R194
RCP-AJ2R2K
R196
RCP-AJ2R2K
R197
SHB-001656
U22
(7-48-27) F2
SHB-001657
U23
UTE-AH001JX01
TP7
(8-48-22) 30KHZ
(8-48-25) 120KHZ
(8-48-29) 180KHZ
(8-48-31) 320KHZ
(8-48-33) 1KHZ

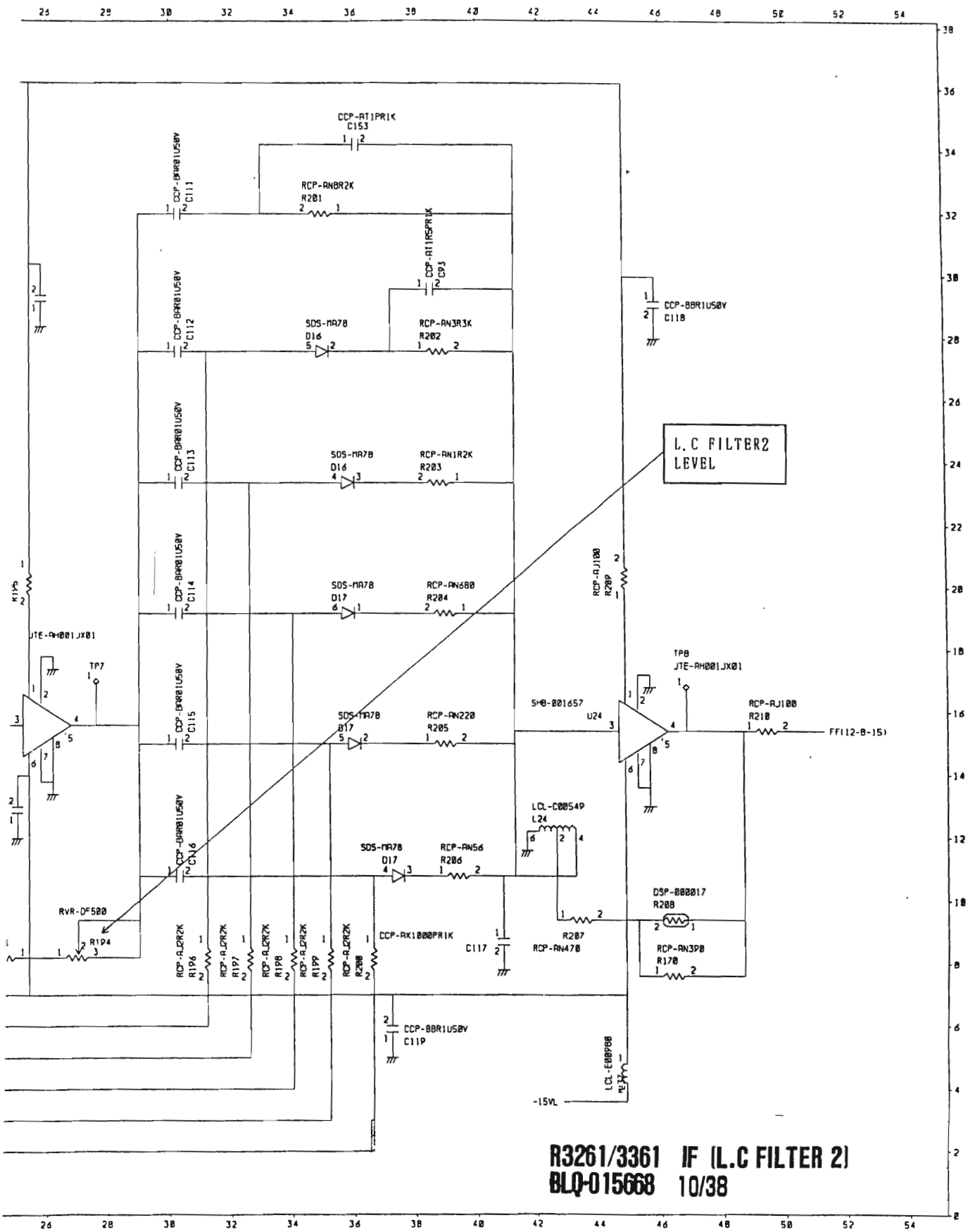

R3261/3361 IF (L.C FILTER 2)
BLQ-015668 10/38

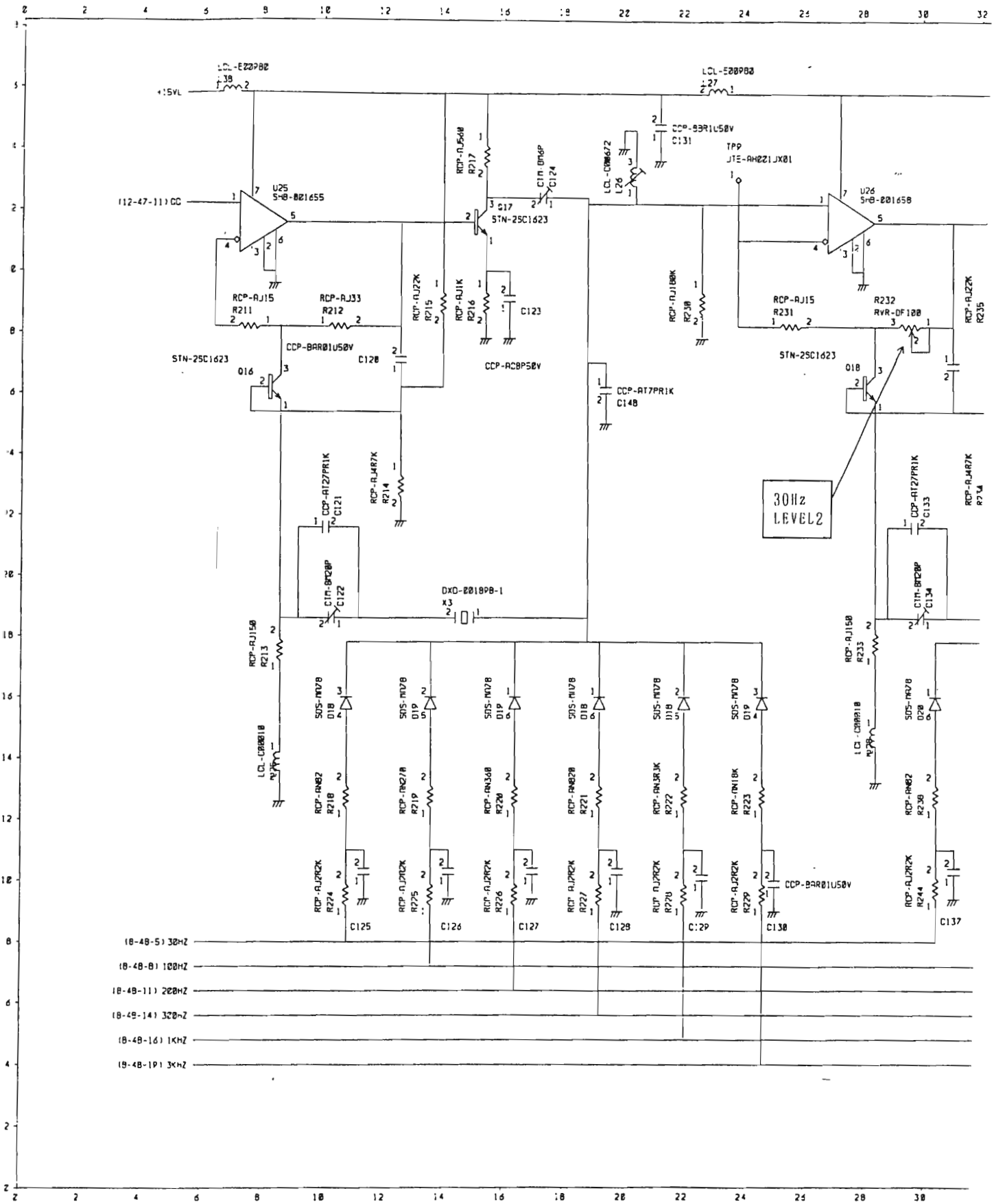
+15VL
LCL-E22P82
L38
LCL-E20P80
L27
U25
SHB-B01655
U26
SHB-B01658
(12-47-11) CC
RCP-RJ15
R211
RCP-RJ33
R212
RCP-RJ22K
R215
RCP-RJ1K
R216
RCP-RJ560
R217
Q17
STN-2SC1623
C124
C123
CCP-BAR01U50V
C128
CCP-AC8P50V
STN-2SC1623
Q16
CCP-AT7PR1K
C148
CCP-BR31U50V
C131
TPP
JTE-AH021JX01
LCL-C00672
L26
RCP-RJ100K
R230
RCP-RJ15
R231
R232
RVR-DF100
RCP-RJ22K
R235
STN-2SC1623
Q18
30Hz
LEVEL2
CCP-AT27PR1K
C121
RCP-RJ487K
R214
C122
DXO-0018PB-1
X3
RCP-RJ150
R213
LCL-C00818
L29
SOS-M078
D18
D19
RCP-RN82
R218
RCP-RN278
R219
RCP-RN368
R220
RCP-RN820
R221
RCP-RN3K3K
R222
RCP-RN18K
R223
RCP-RJ2R2K
R224
R225
R226
R227
R228
R229
C125
C126
C127
C128
C129
C130
CCP-BAR01U50V
CCP-AT27PR1K
C133
C134
RCP-RJ487K
R234
RCP-RJ150
R233
LCL-C00818
L30
SOS-M078
D20
RCP-RN82
R230
RCP-RJ2R2K
R244
C137
(B-48-5) 30HZ
(B-48-8) 100HZ
(B-48-11) 200HZ
(B-48-14) 320HZ
(B-48-16) 1KHZ
(B-48-19) 3KHZ

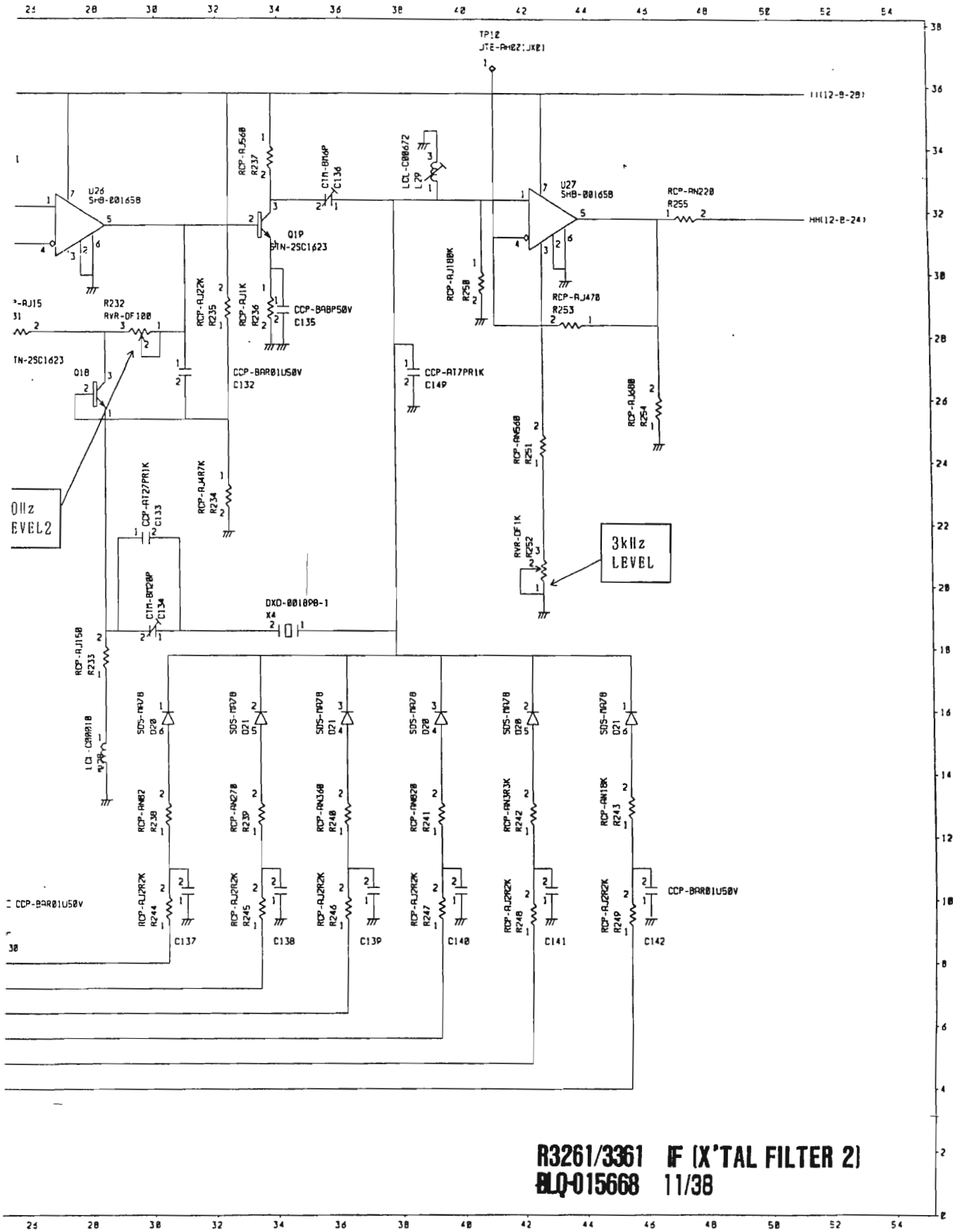

R3261/3361 IF (X'TAL FILTER 2)
BLQ-015668 11/38

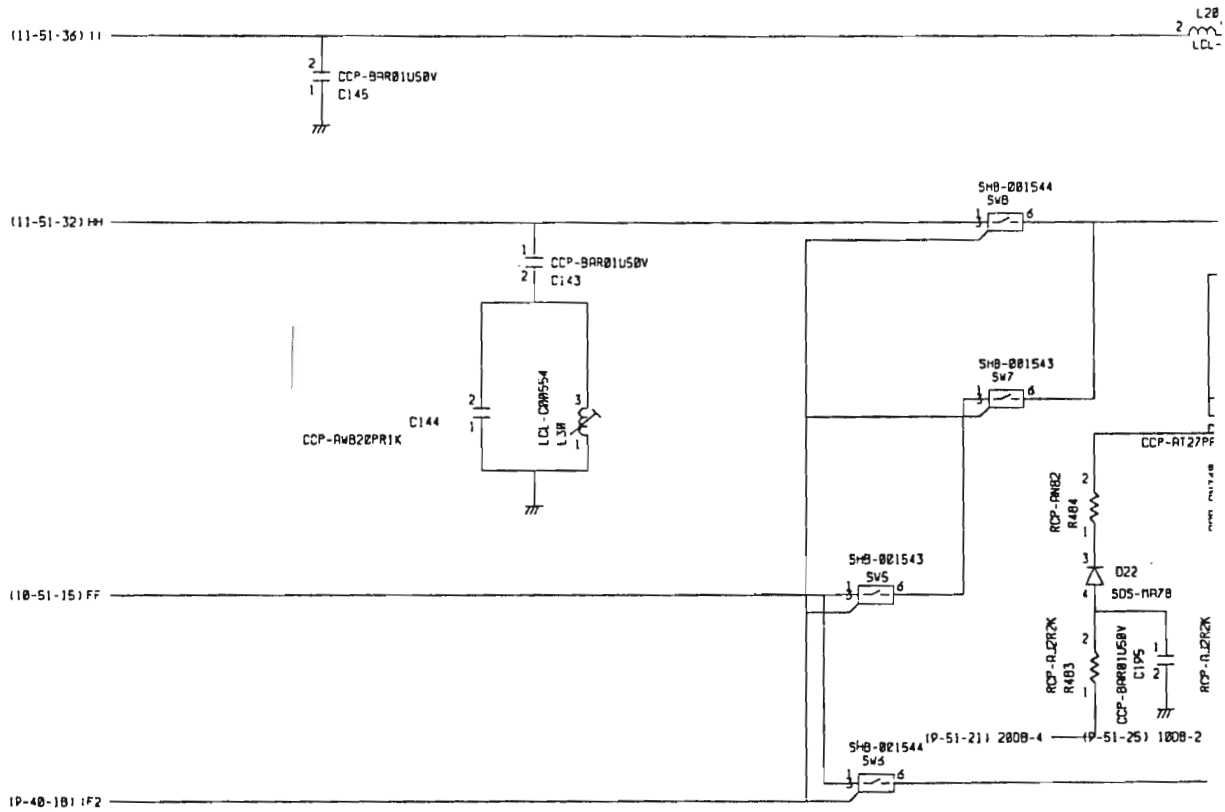
(11-51-36) 11
L20
LCL-
CCP-BAR01U50V
C145
(11-51-32) HH
SHB-001544
SW8
CCP-BAR01U50V
C143
SHB-001543
SW7
C144
CCP-AWB22PR1K
LCL-CAR554
L38
CCP-AT27PF
RCP-AN82
R484
(10-51-15) FF
SHB-001543
SW5
D22
SDS-MA78
RCP-AJ2K2K
R483
CCP-BAR01U50V
C195
RCP-AJ2K2K
(P-51-21) 200B-4
(P-51-25) 100B-2
SHB-001544
SW6
(P-40-18) IF2

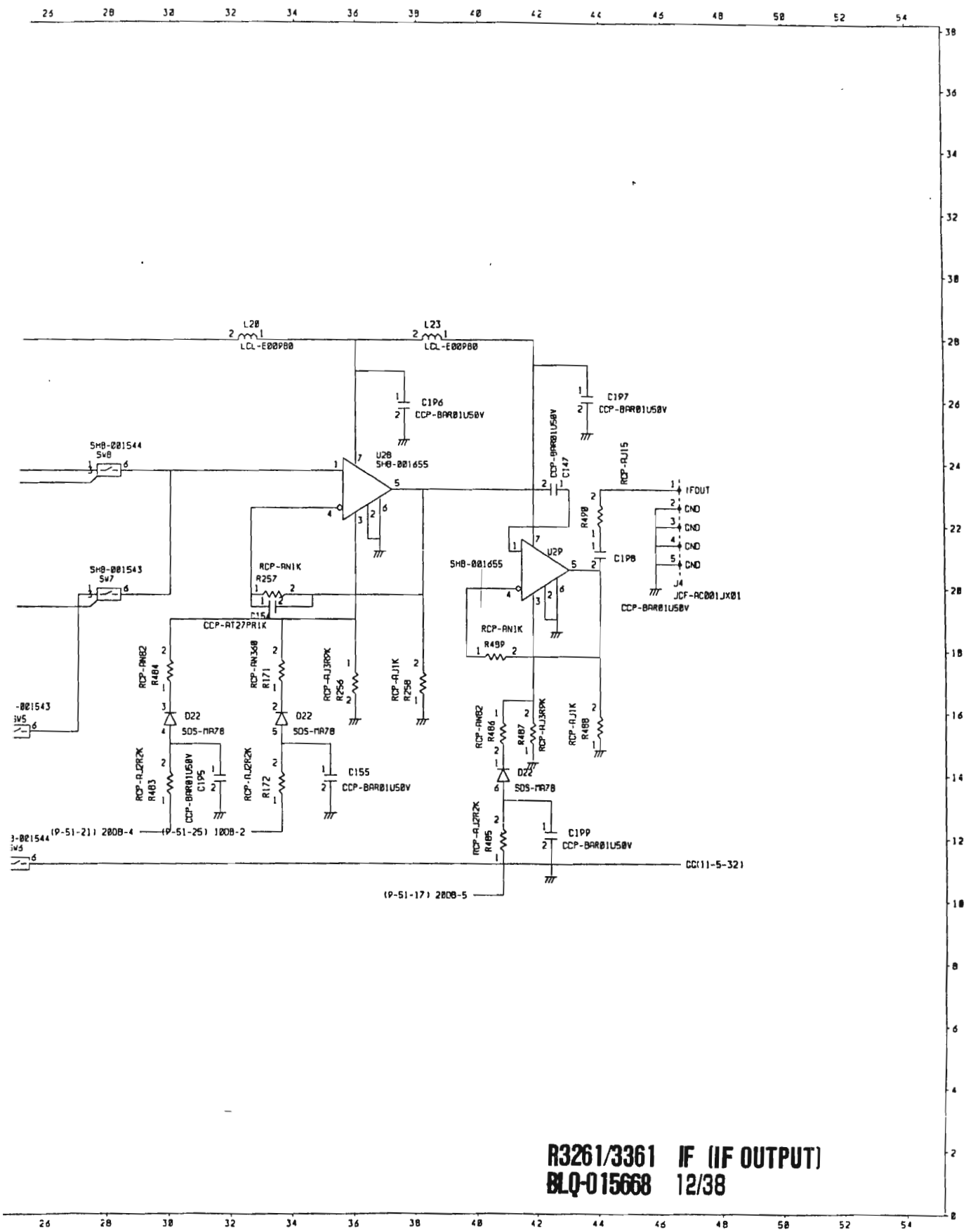

R3261/3361 IF (IF OUTPUT)
BLQ-015668 12/38

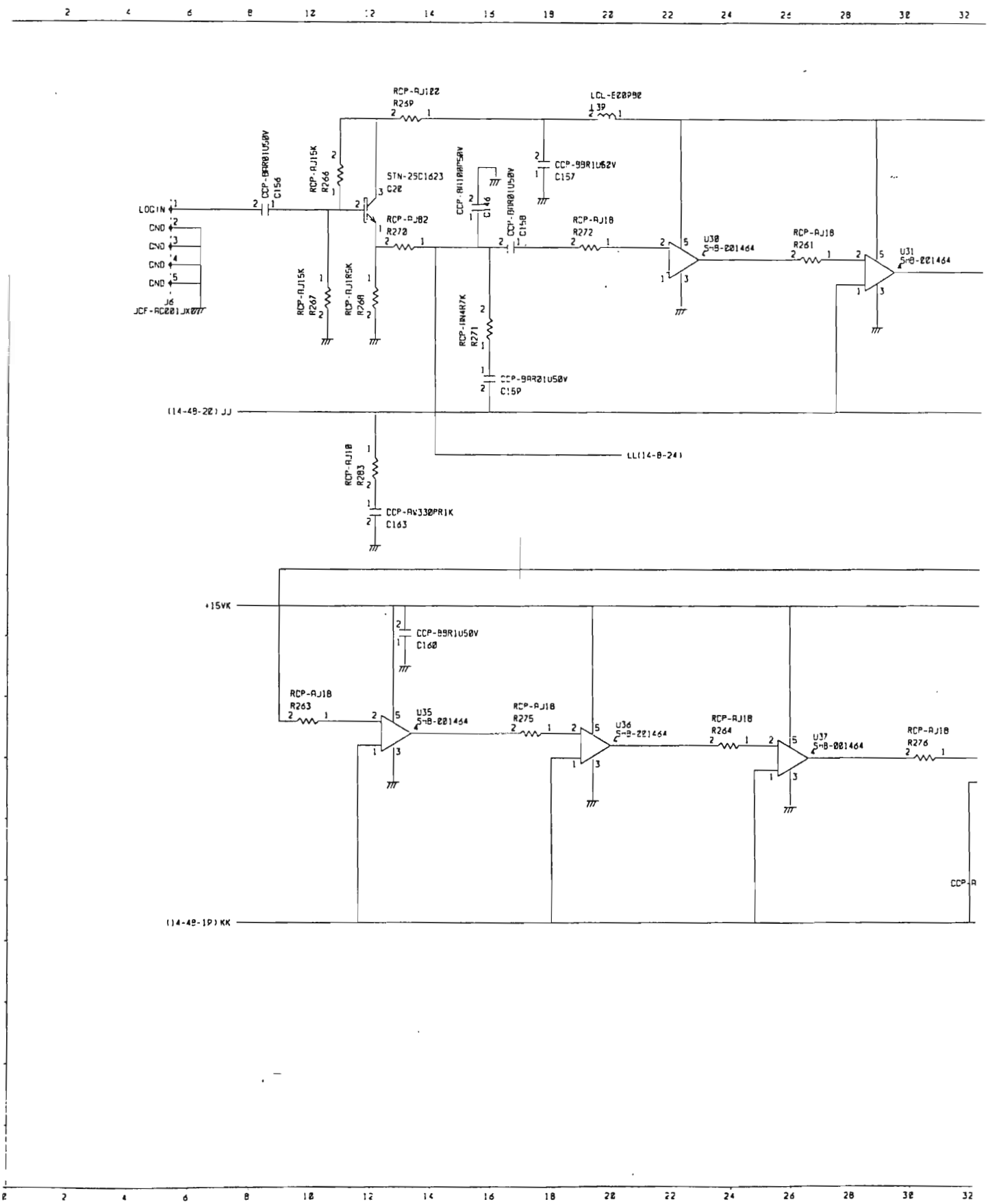
RCP-AJ182
R269
LCL-E20P90
CCP-B9R01U50V
C156
RCP-AJ15K
R266
STN-25C1623
C22
CCP-AH10R75V
C146
CCP-B9R01U50V
C158
CCP-B9R1U62V
C157
LOGIN
GND
GND
GND
GND
J6
JCF-AC201JX
RCP-AJ82
R270
RCP-AJ18
R272
U30
SHB-201464
RCP-AJ18
R261
U31
SHB-201464
RCP-AJ15K
R267
RCP-AJ185K
R268
RCP-1N4R7K
R271
CCP-B9R01U50V
C159
(14-48-22) JJ
LL(14-B-24)
RCP-AJ18
R283
CCP-AW330PR1K
C163
+15VK
CCP-B9R1U50V
C160
RCP-AJ18
R263
U35
SHB-201464
RCP-AJ18
R275
U36
SHB-221464
RCP-AJ18
R264
U37
SHB-201464
RCP-AJ18
R276
CCP-A
(14-48-19) KK

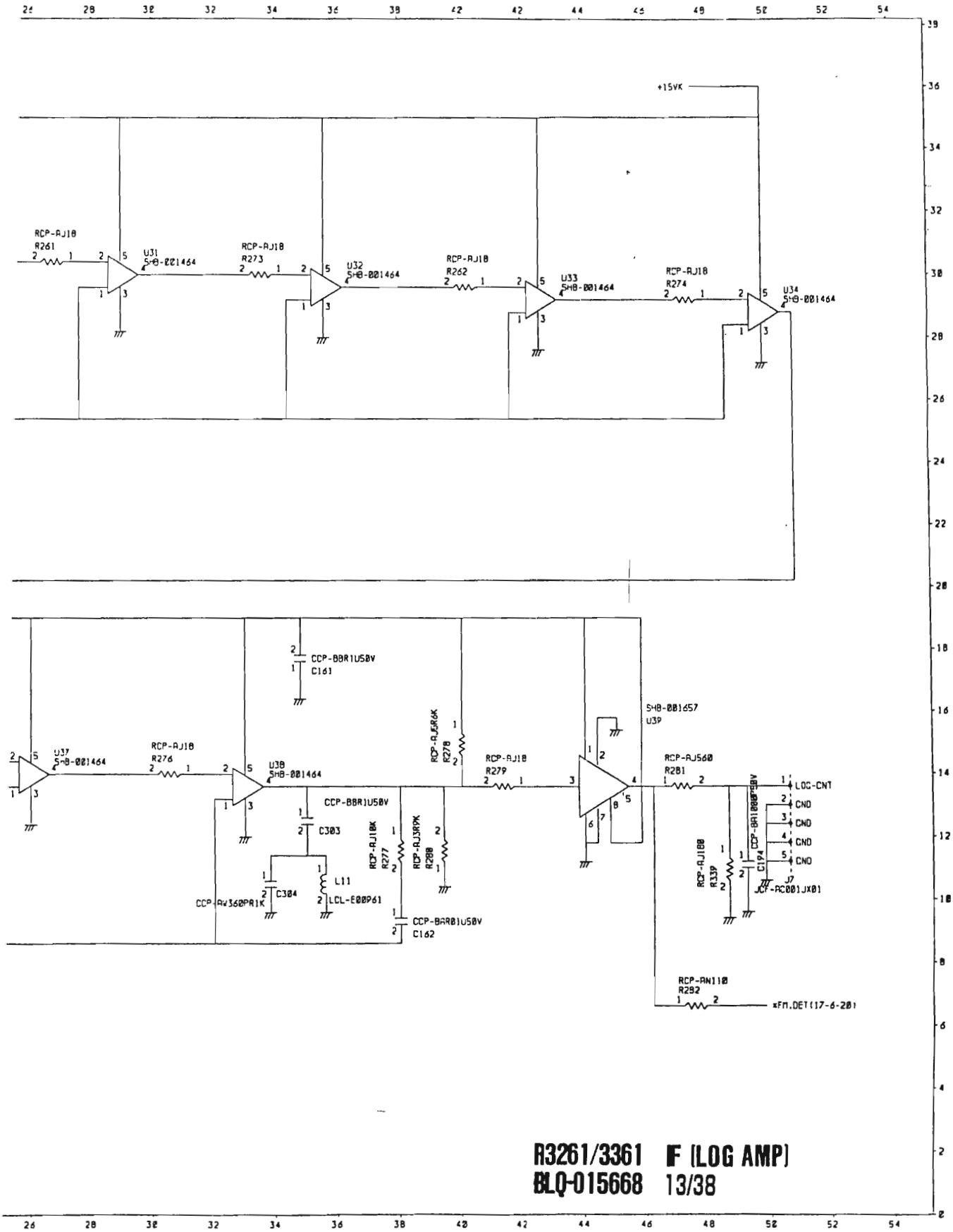

R3261/3361 IF (LOG AMP)
BLQ-015668 13/38

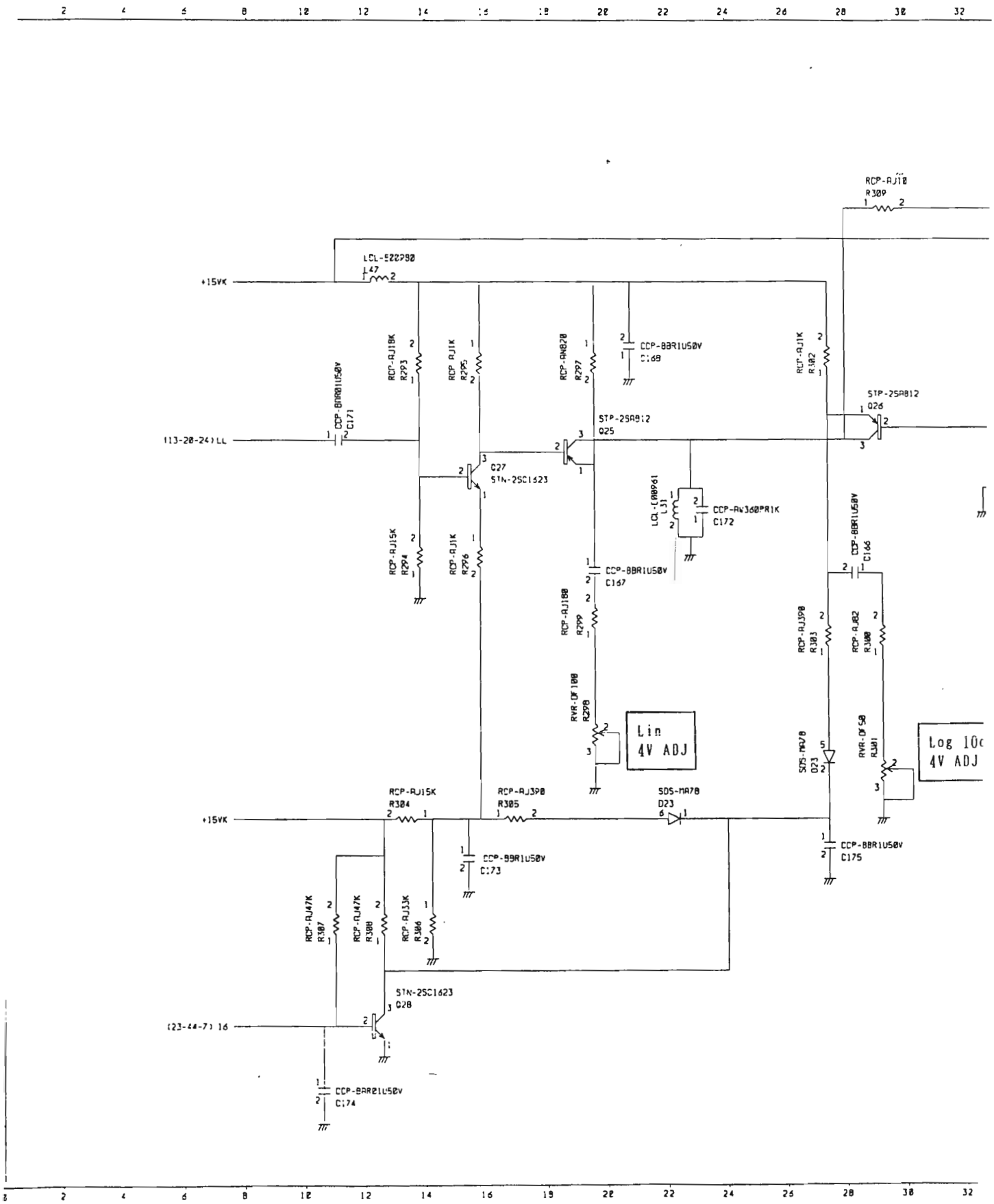
RCP-AJ10
R309
LCL-522290
L47
+15VK
CCP-8BR1U50V
C171
RCP-AJ18K
R293
RCP-AJ1K
R295
RCP-AN820
R297
CCP-8BR1U50V
C168
RCP-AJ1K
R302
STP-2SA812
Q26
STP-2SA812
Q25
Q27
STN-2SC1623
LCL-EA8961
L31
CCP-AW360PR1K
C172
RCP-AJ15K
R294
RCP-AJ1K
R296
CCP-8BR1U50V
C167
CCP-8BR1U50V
C166
RCP-AJ188
R299
RCP-AJ398
R303
RCP-AJ82
R300
RVR-DF108
R298
Lin
4V ADJ
SDS-MA78
D23
RVR-DF50
RJ01
Log 10
4V ADJ
RCP-AJ15K
R304
RCP-AJ398
R305
SDS-MA78
D23
CCP-8BR1U50V
C175
CCP-8BR1U50V
C173
RCP-AJ47K
R307
RCP-AJ47K
R308
RCP-AJ33K
R306
STN-2SC1623
Q28
CCP-8BR1U50V
C174

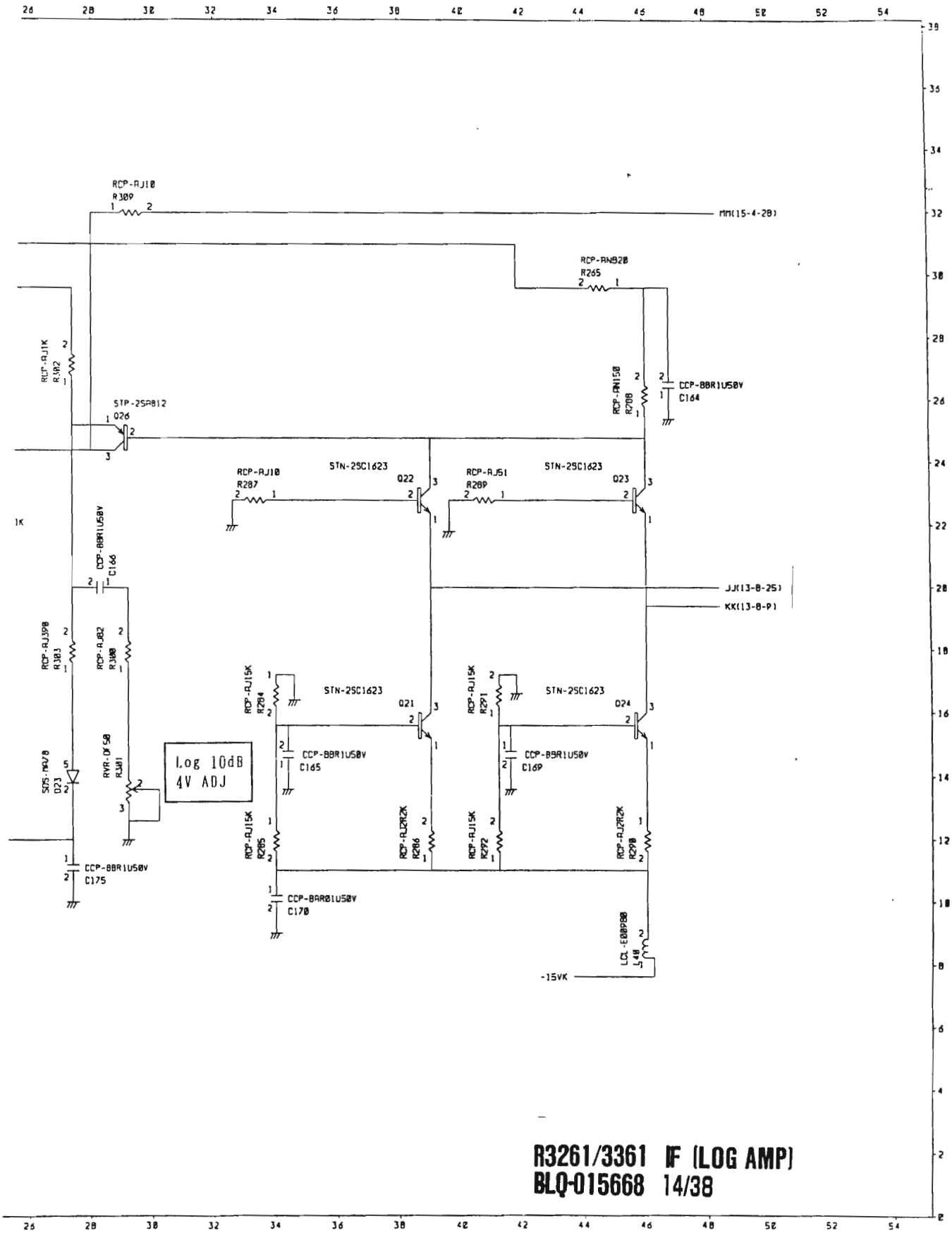

R3261/3361 IF (LOG AMP)
BLQ-015668 14/38

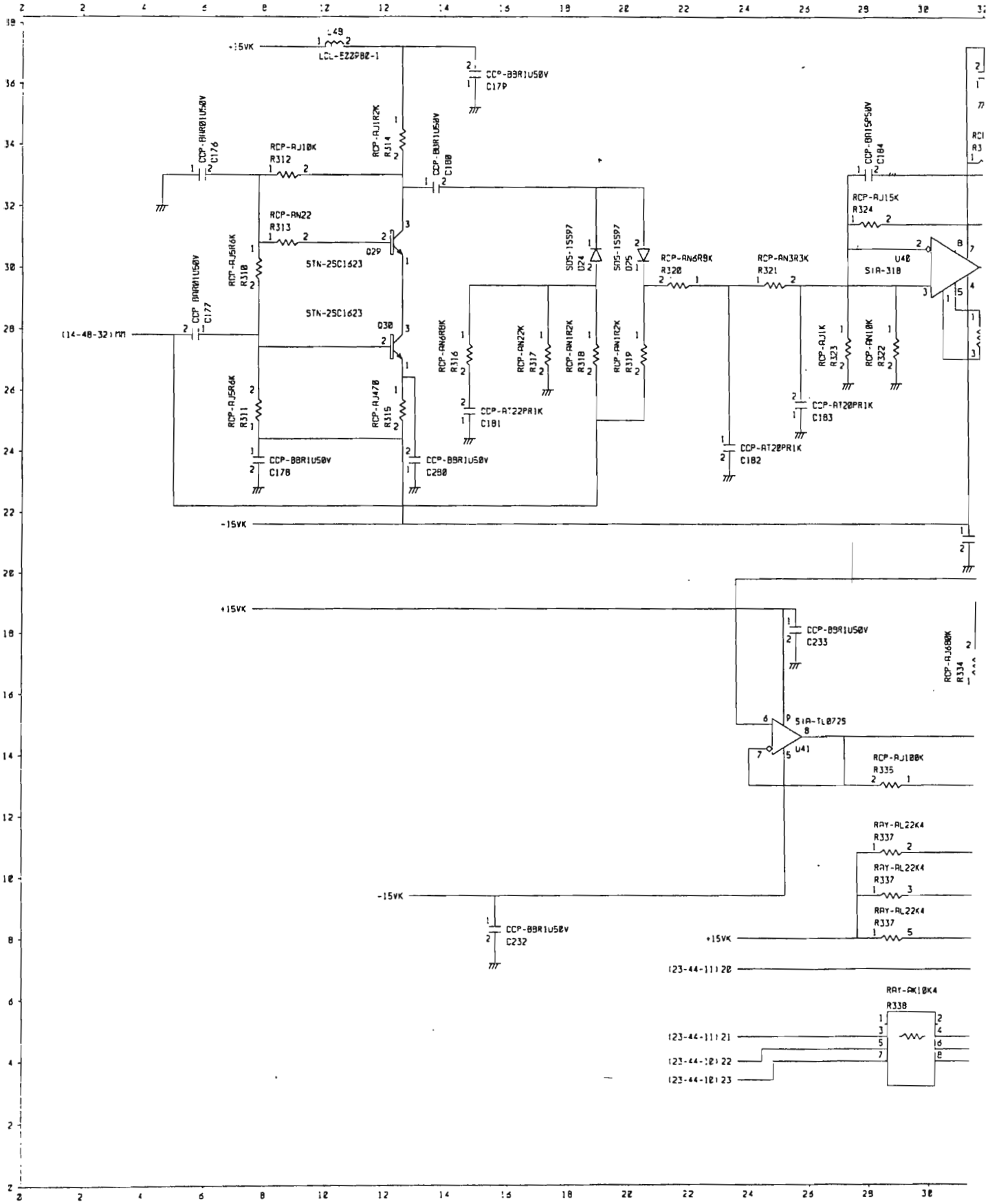
+15VK
L49
LCL-EZ2PBZ-1
CCP-B8R1U50V
C179
CCP-AHR01U50V
C176
RCP-AJ10K
R312
RCP-AJ1R2K
R314
CCP-BBR1U50V
C180
RCP-AN22
R313
Q29
STN-2SC1623
RCP-AJ5R6K
R310
CCP BHR01U50V
C177
(14-48-32)MM
STN-2SC1623
Q30
RCP-AJ5R6K
R311
RCP-AJ478
R315
CCP-B8R1U50V
C178
CCP-B8R1U50V
C280
SDS-1SS97
D24
SDS-1SS97
D25
RCP-AN6R8K
R316
RCP-AN22K
R317
RCP-AN1R2K
R318
RCP-AN1R2K
R319
CCP-AT22PR1K
C181
RCP-AN6R8K
R320
RCP-AN3R3K
R321
CCP-AT20PR1K
C182
CCP-AT20PR1K
C183
RCP-AJ1K
R323
RCP-AN10K
R322
CCP-BH15P50V
C184
RCP-AJ15K
R324
U40
SIA-318
-15VK
+15VK
CCP-B9R1U50V
C233
SIA-TL0725
U41
RCP-AJ100K
R335
RCP-AJ680K
R334
RAY-AL22K4
R337
RAY-AL22K4
R337
RAY-AL22K4
R337
-15VK
CCP-B8R1U50V
C232
+15VK
(23-44-11)20
RAY-AK10K4
R338
(23-44-11)21
(23-44-12)22
(23-44-12)23

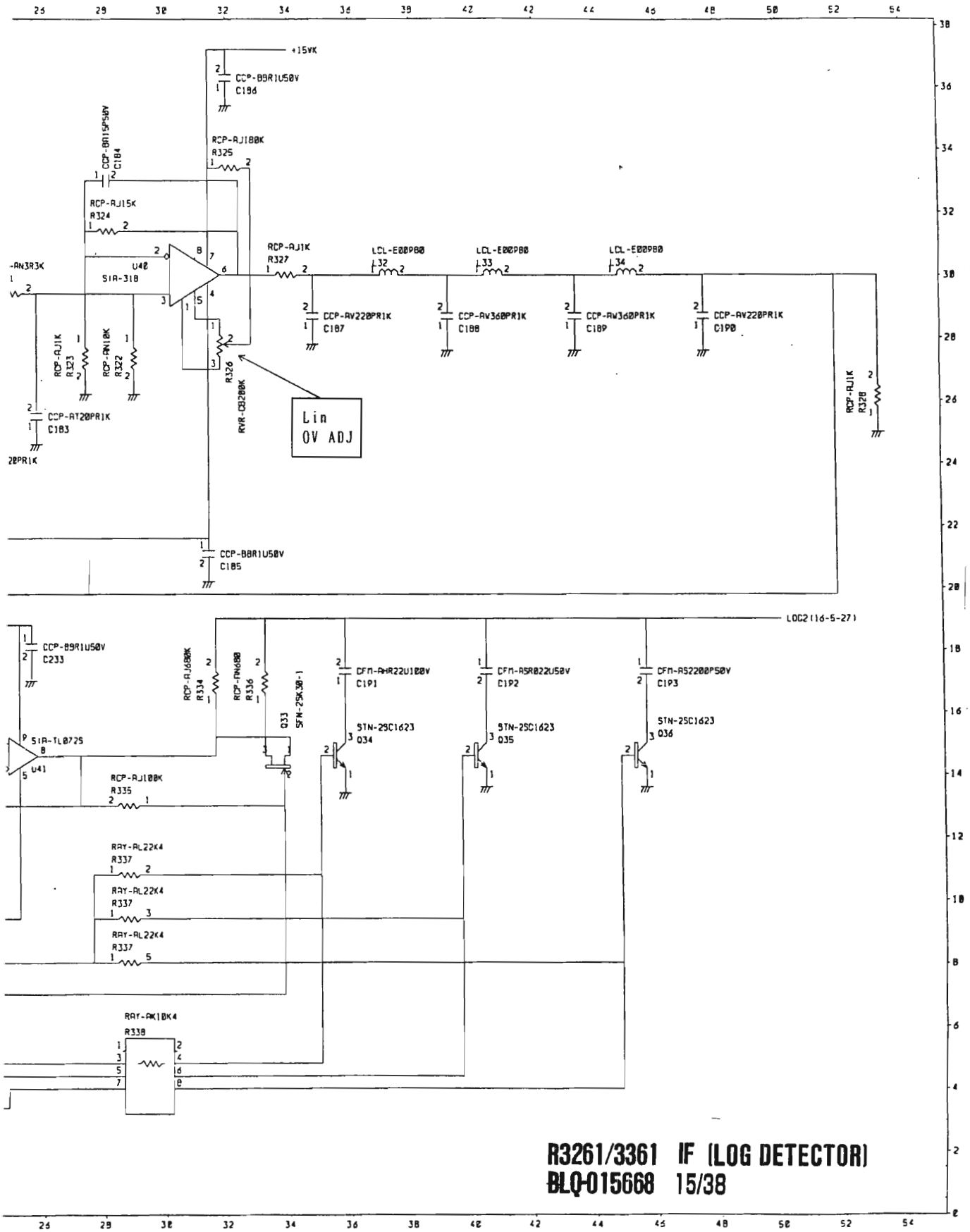

R3261/3361 IF (LOG DETECTOR)
BLQ-015668 15/38

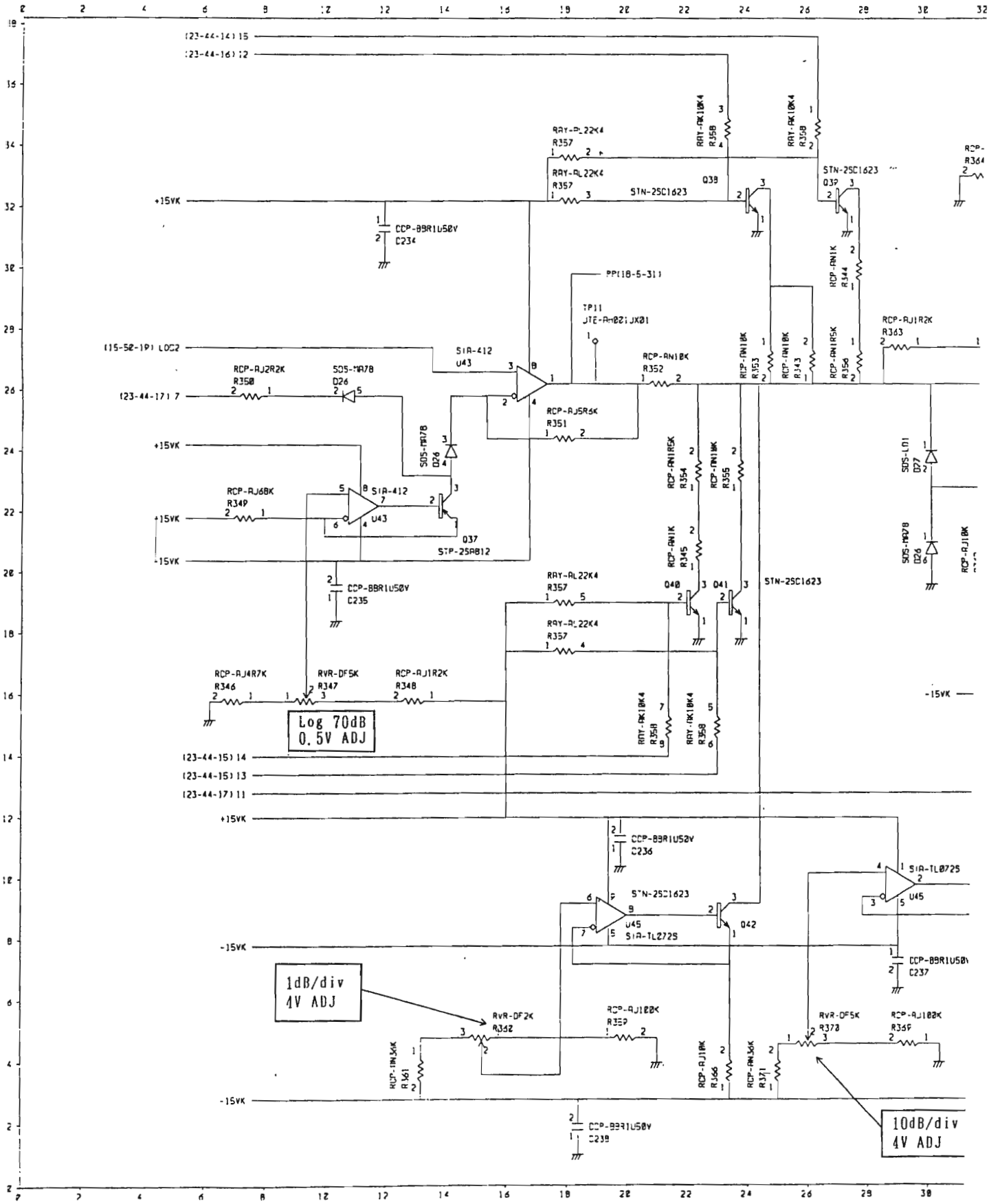
(23-44-14) 15
(23-44-16) 12
+15VK
-15VK
CCP-BBR1U50V C234
RAY-AL22K4 R357
RAY-AK10K4 R358
STN-2SC1623 Q38
STN-2SC1623 Q39
RCP-AN1K R344
RCP-AJ1R2K R363
PP(18-5-31)
TP11 JTE-AM021JX01
(15-52-19) LOC2
SIA-412 U43
RCP-AN18K R352
RCP-AN18K R353
RCP-AN18K R343
RCP-AN1R5K R356
RCP-AJ2R2K R350
SDS-MA78 D26
(23-44-17) 7
RCP-AJ5R6K R351
RCP-AN1R5K R354
RCP-AN1WK R355
SDS-LD1 D77
RCP-AJ6BK R349
STP-2SA812 Q37
RCP-AN1K R345
Q40
Q41
STN-2SC1623
RAY-AL22K4 R357
RCP-AJ4R7K R346
RVR-DF5K R347
RCP-AJ1R2K R348
Log 70dB
0.5V ADJ
RAY-AK10K4 R358
(23-44-15) 14
(23-44-15) 13
(23-44-17) 11
CCP-BBR1U50V C236
SIA-TL072S U45
STN-2SC1623 Q42
CCP-BBR1U50V C237
1dB/div
4V ADJ
RVR-DF2K R362
RCP-AJ10K R359
RCP-AN36K R361
RCP-AJ1RK R366
RCP-AN36K R371
RVR-DF5K R372
10dB/div
4V ADJ
CCP-BBR1U50V C238

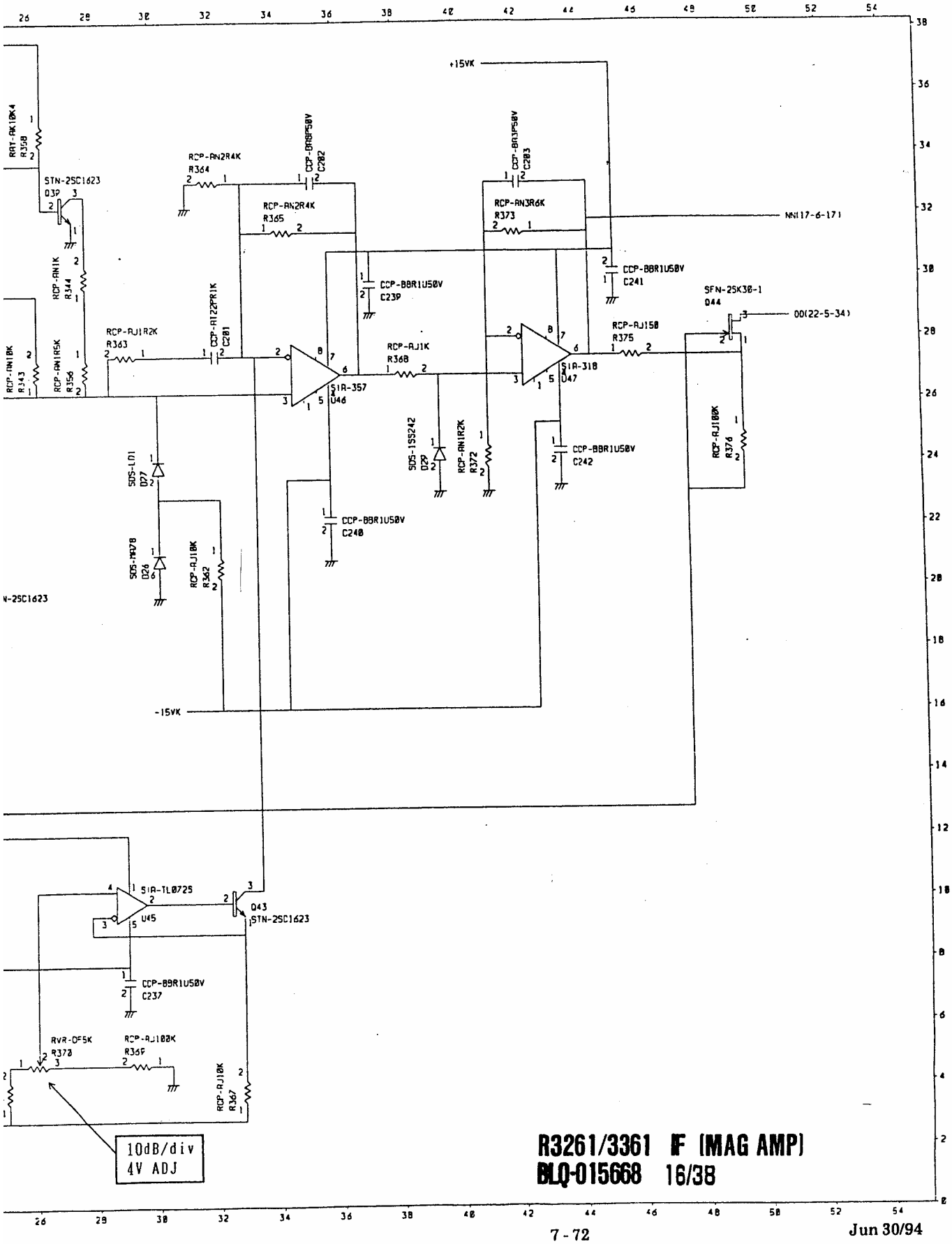

R3261/3361 IF (MAG AMP)
BLQ-015668 16/38

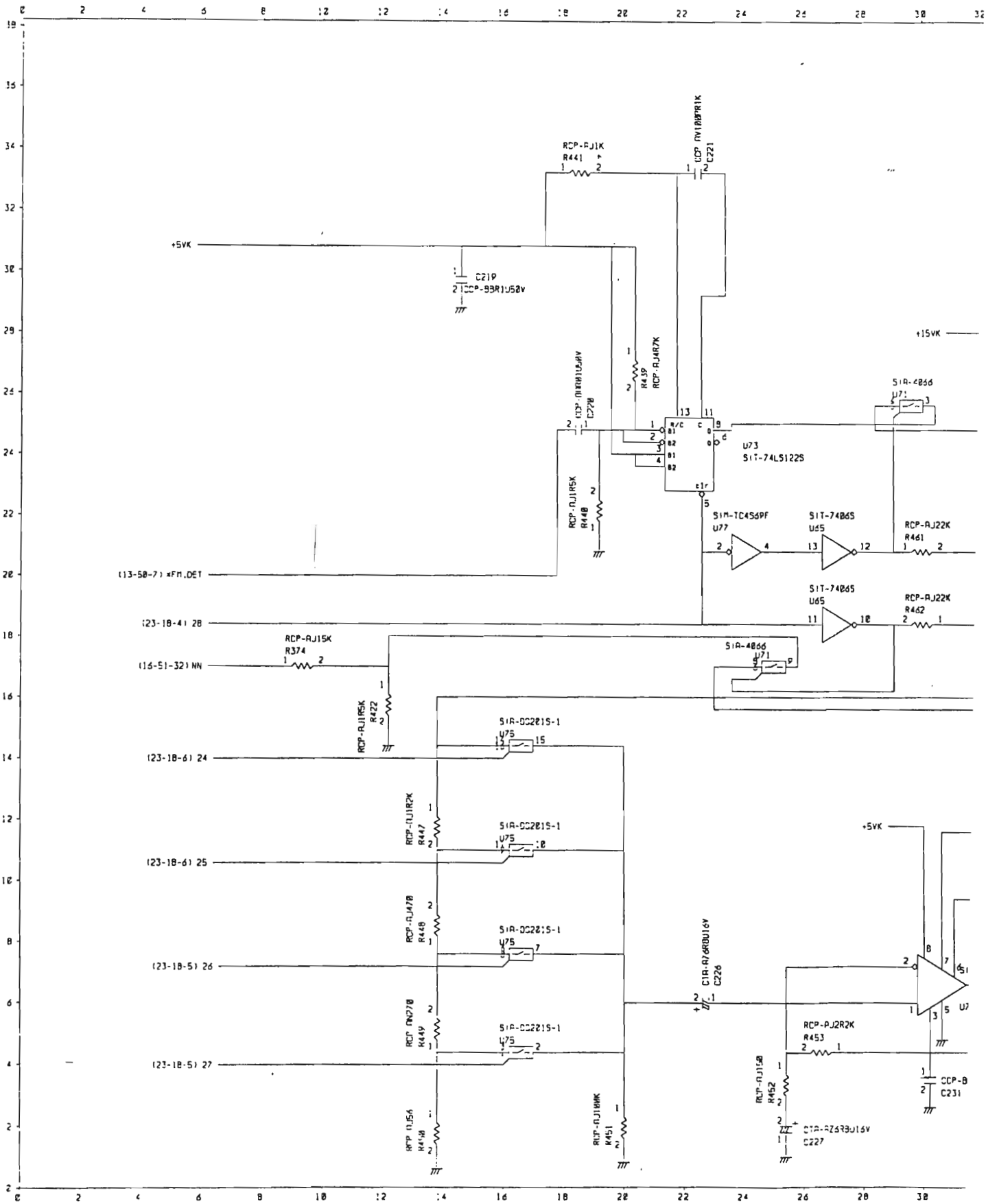
RCP-RJ1K
R441
C221
+5VK
C219
CCP-9BR1U50V
+15VK
R439
RCP-RJ4R7K
C220
U73
SIT-74LS122S
SIA-4066
U71
RCP-RJ1R5K
R440
SIM-TC4S69PF
U77
SIT-74065
U65
RCP-RJ22K
R461
(13-50-7) xFM.DET
R462
(23-18-4) 28
RCP-RJ15K
R374
(16-51-32) NN
R422
SIA-DC2215-1
U75
(23-18-6) 24
R447
(23-18-6) 25
R448
(23-18-5) 26
R449
(23-18-5) 27
R451
C226
RCP-RJ2R2K
R453
R452
C227
C231

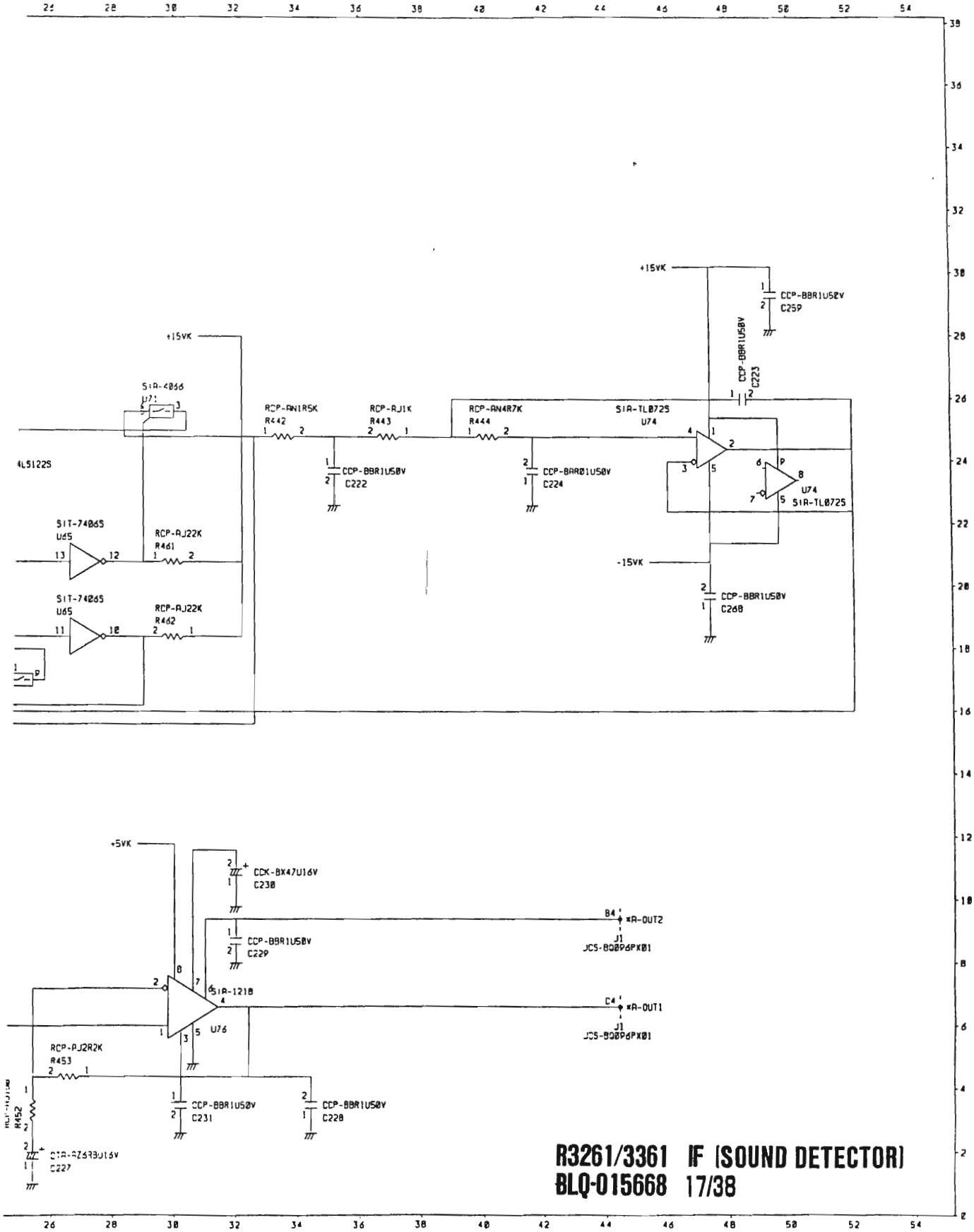

R3261/3361 IF (SOUND DETECTOR)
BLQ-015668 17/38

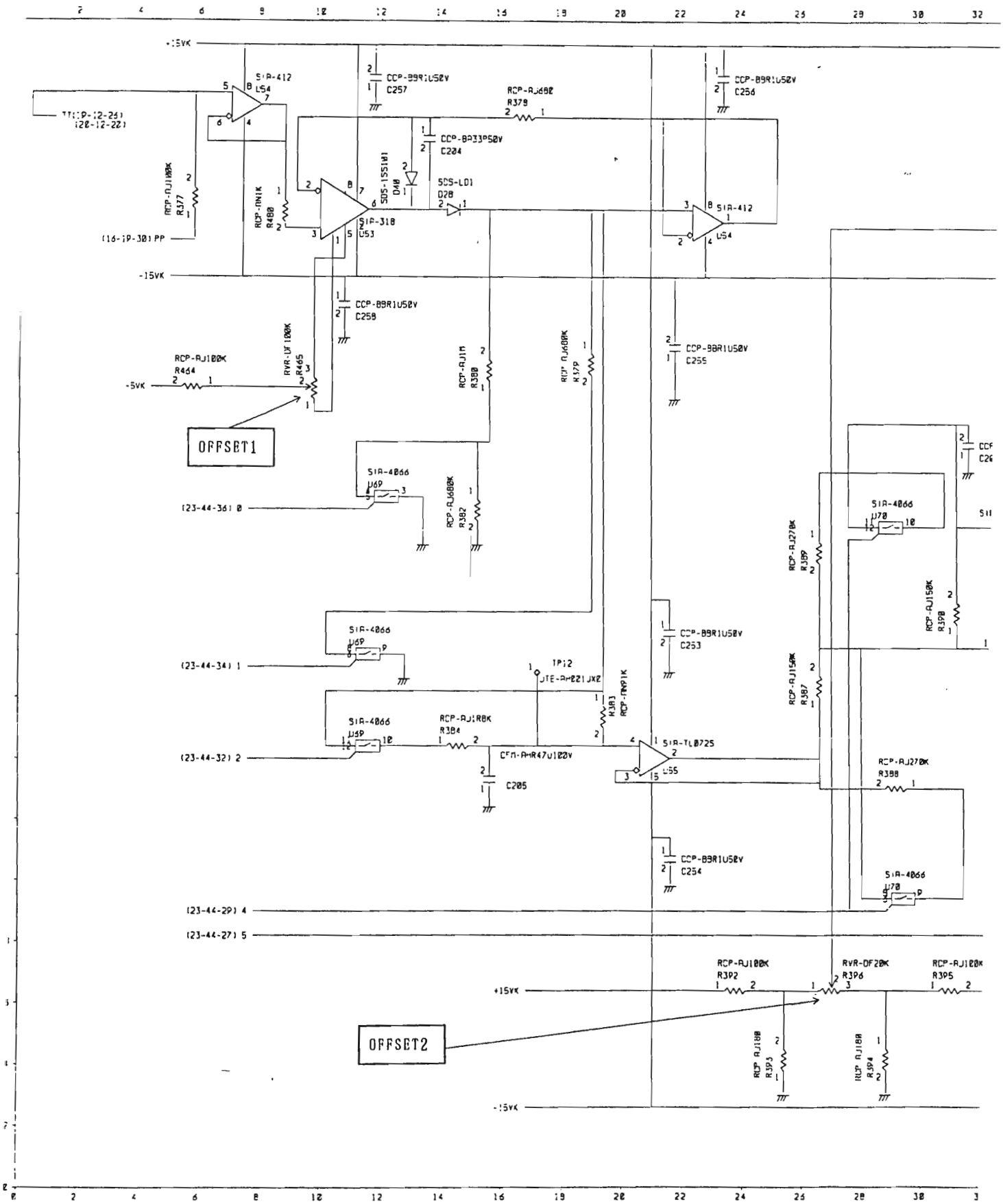
+15VK
-15VK
SIA-412
U54
CCP-B9R1U50V
C257
RCP-AJ680
R378
CCP-B9R1U50V
C256
CCP-B933P50V
C204
SDS-1SS101
D40
SDS-LD1
D28
RCP-AJ100K
R377
RCP-AW1K
R480
SIA-318
U53
(16-19-30) PP
CCP-B9R1U50V
C258
RVR-DF100K
R465
RCP-AJ100K
R464
-5VK
OFFSET1
RCP-AJ1M
R380
RCP-AJ680K
R379
CCP-B9R1U50V
C255
SIA-4066
U69
(23-44-36) 0
RCP-AJ680K
R382
RCP-AJ270K
R389
SIA-4066
U70
RCP-AJ150K
R390
CCP-B9R1U50V
C253
(23-44-34) 1
TP12
UTE-AH221JX2
RCP-AW91K
R383
RCP-AJ150K
R387
SIA-4066
U69
RCP-AJ18K
R384
(23-44-32) 2
CFM-AHR47U100V
C205
SIA-TL0725
U55
RCP-AJ270K
R388
CCP-B9R1U50V
C254
SIA-4066
U70
(23-44-29) 4
(23-44-27) 5
RCP-AJ100K
R392
RVR-DF20K
R396
RCP-AJ100K
R395
+15VK
OFFSET2
RCP-AJ18K
R393
RCP-AJ18K
R394
-15VK

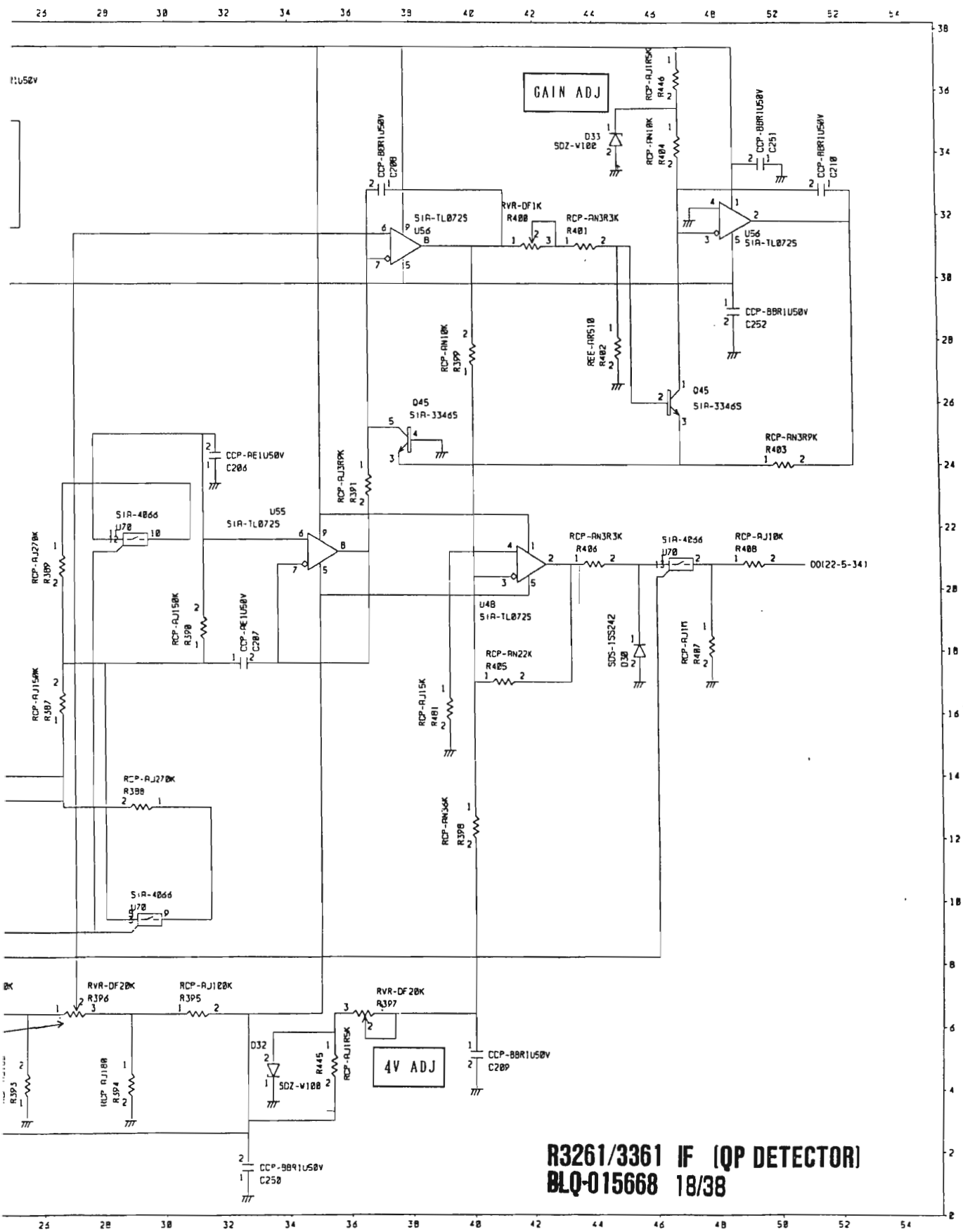

R3261/3361 IF (QP DETECTOR)
BLQ-015668 18/38

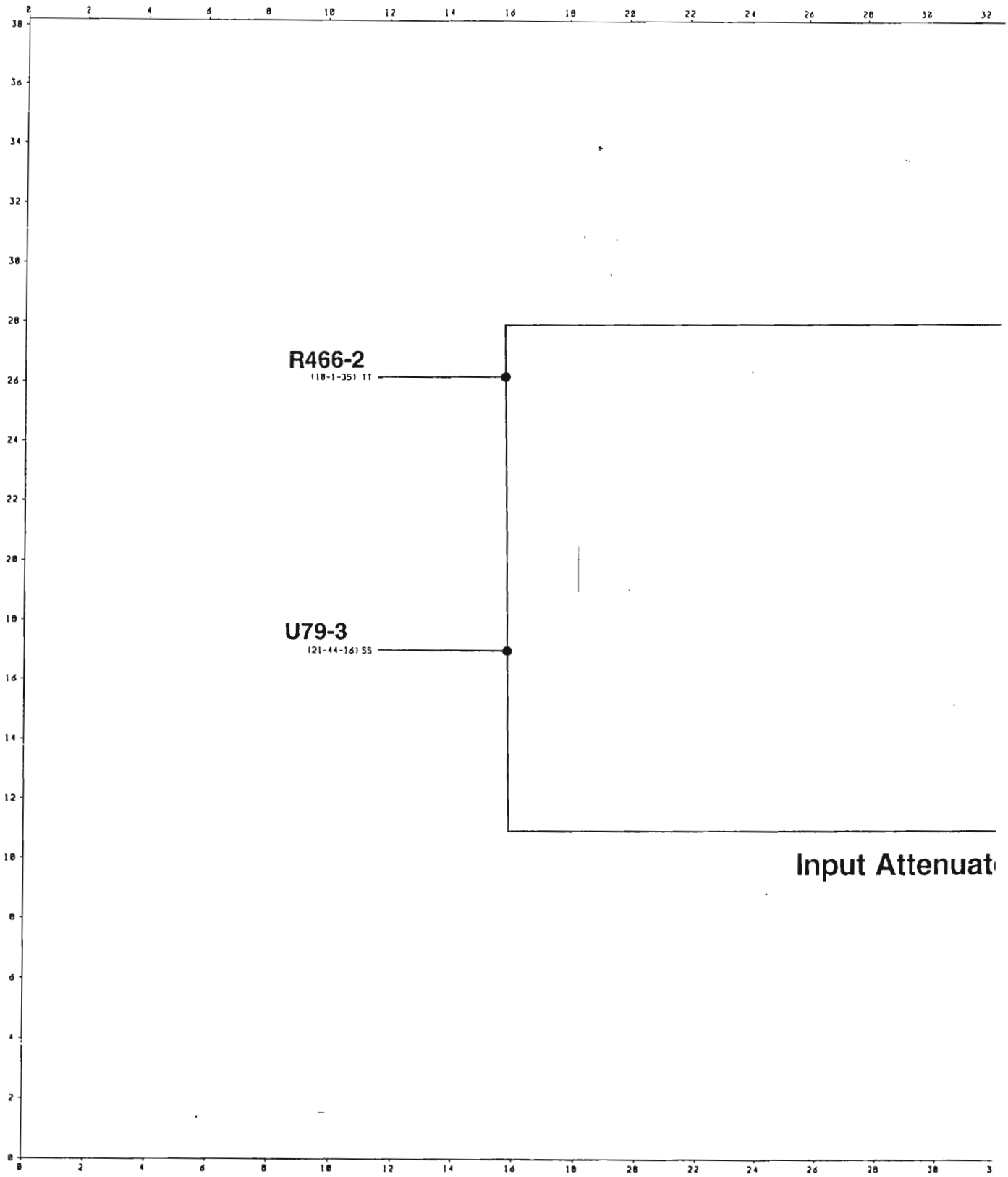
R466-2
(18-1-35) TT
U79-3
(21-44-16) SS
Input Attenuat

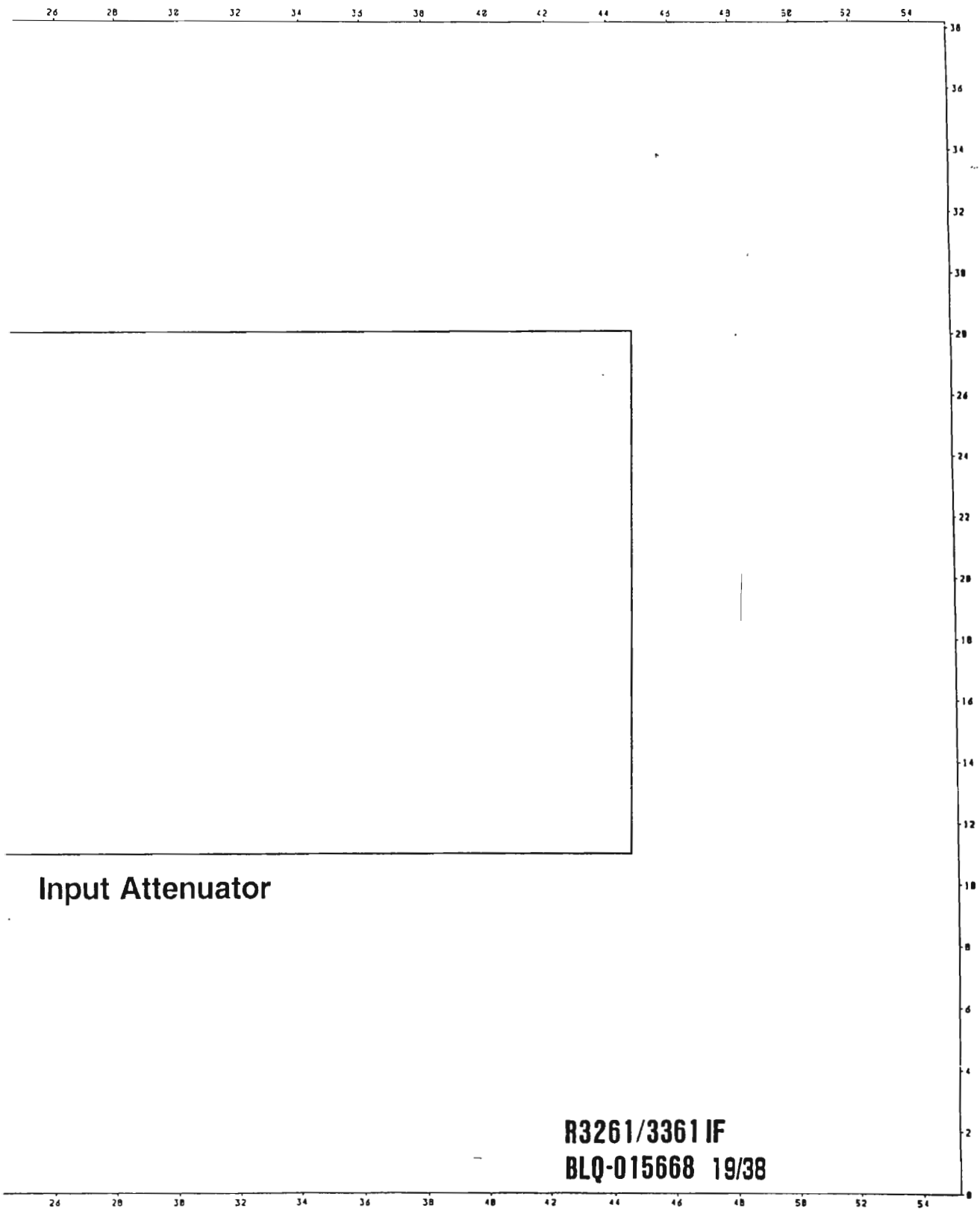
Input Attenuator
R3261/3361 IF
BLQ-015668 19/38

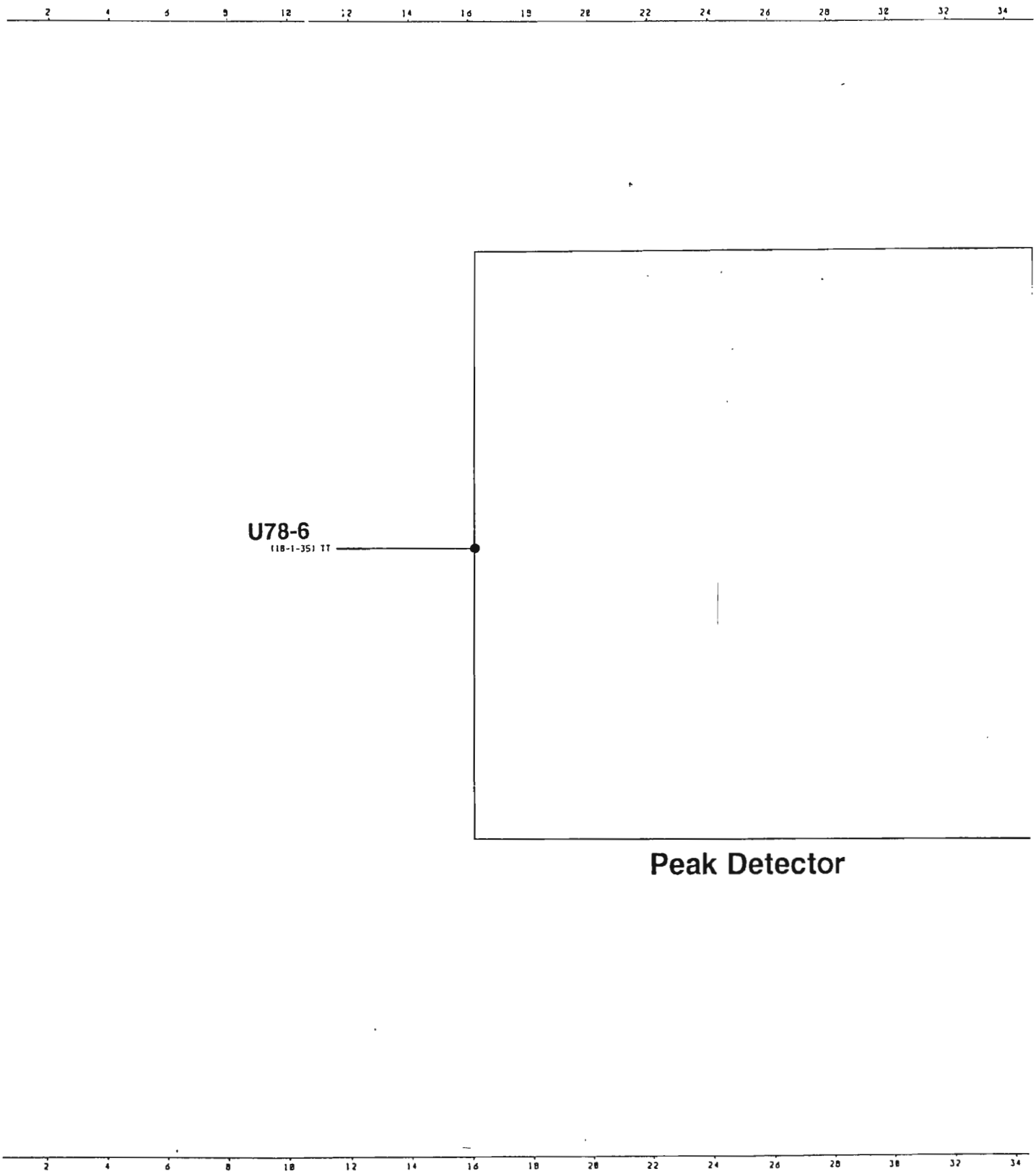
U78-6
(18-1-35) TT
Peak Detector

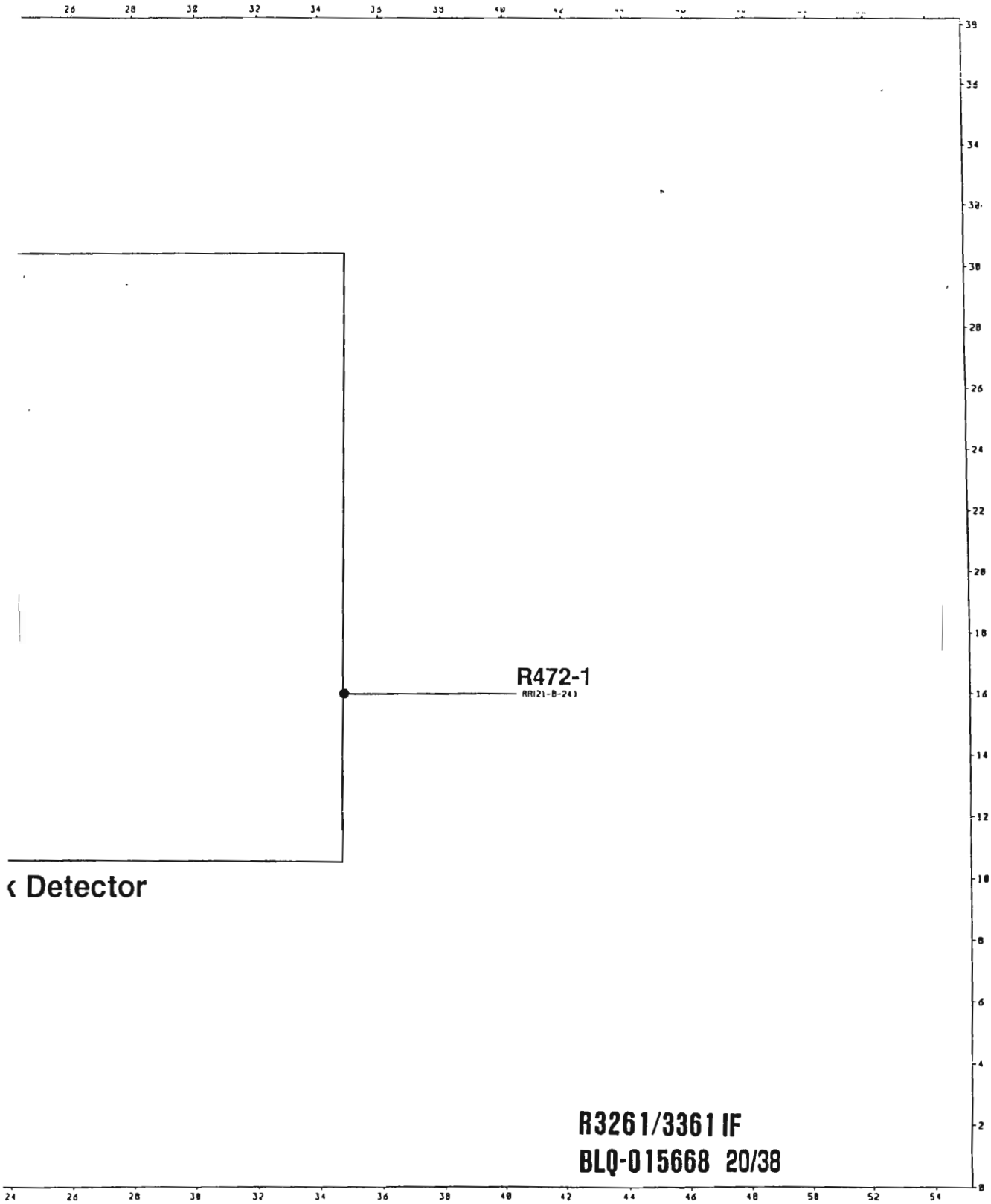
R472-1
RR(2)-B-24)
‹ Detector
R3261/3361 IF
BLQ-015668 20/38

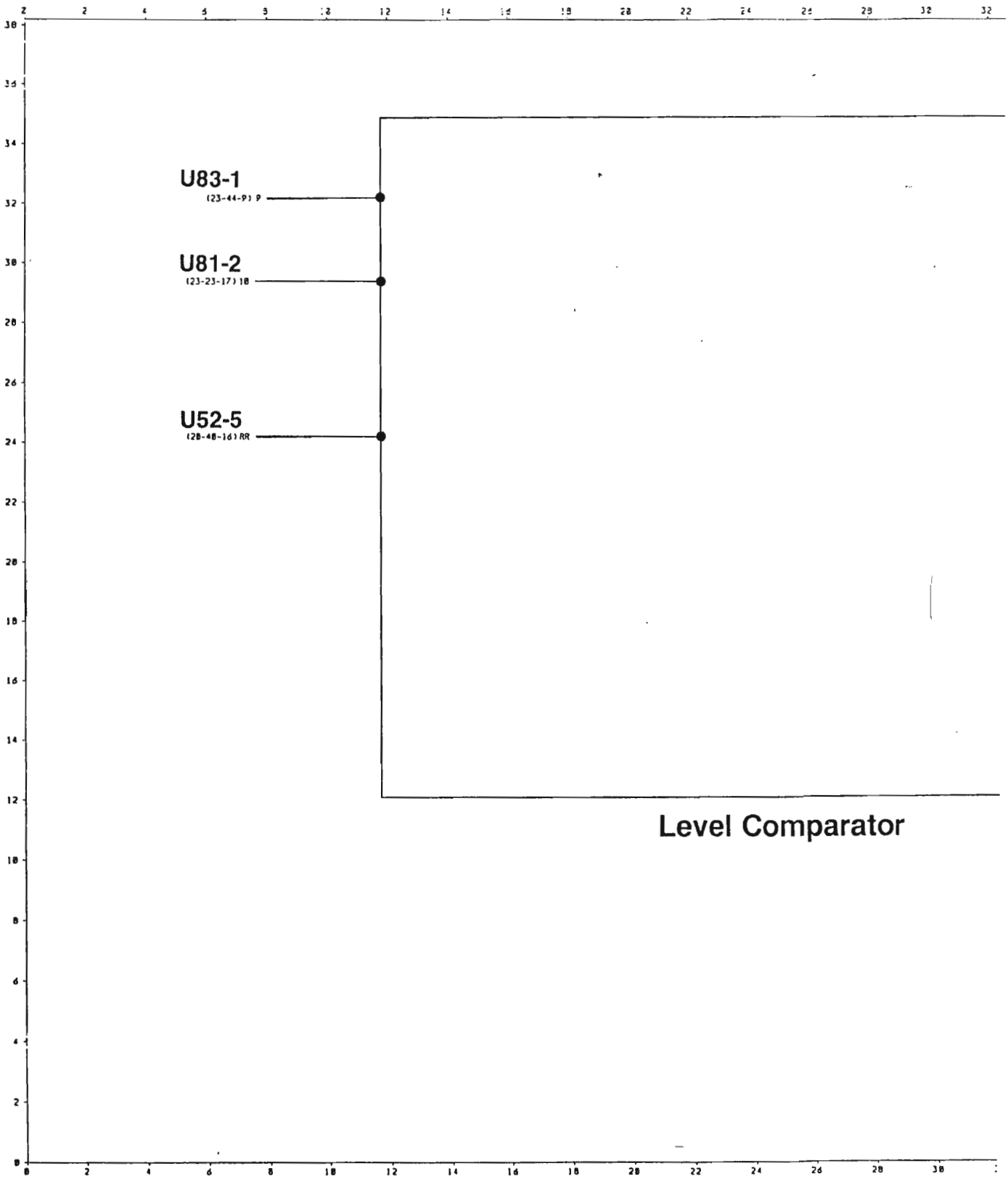
U83-1
(23-44-9) 9
U81-2
(23-23-17) 18
U52-5
(28-48-16) RR
Level Comparator

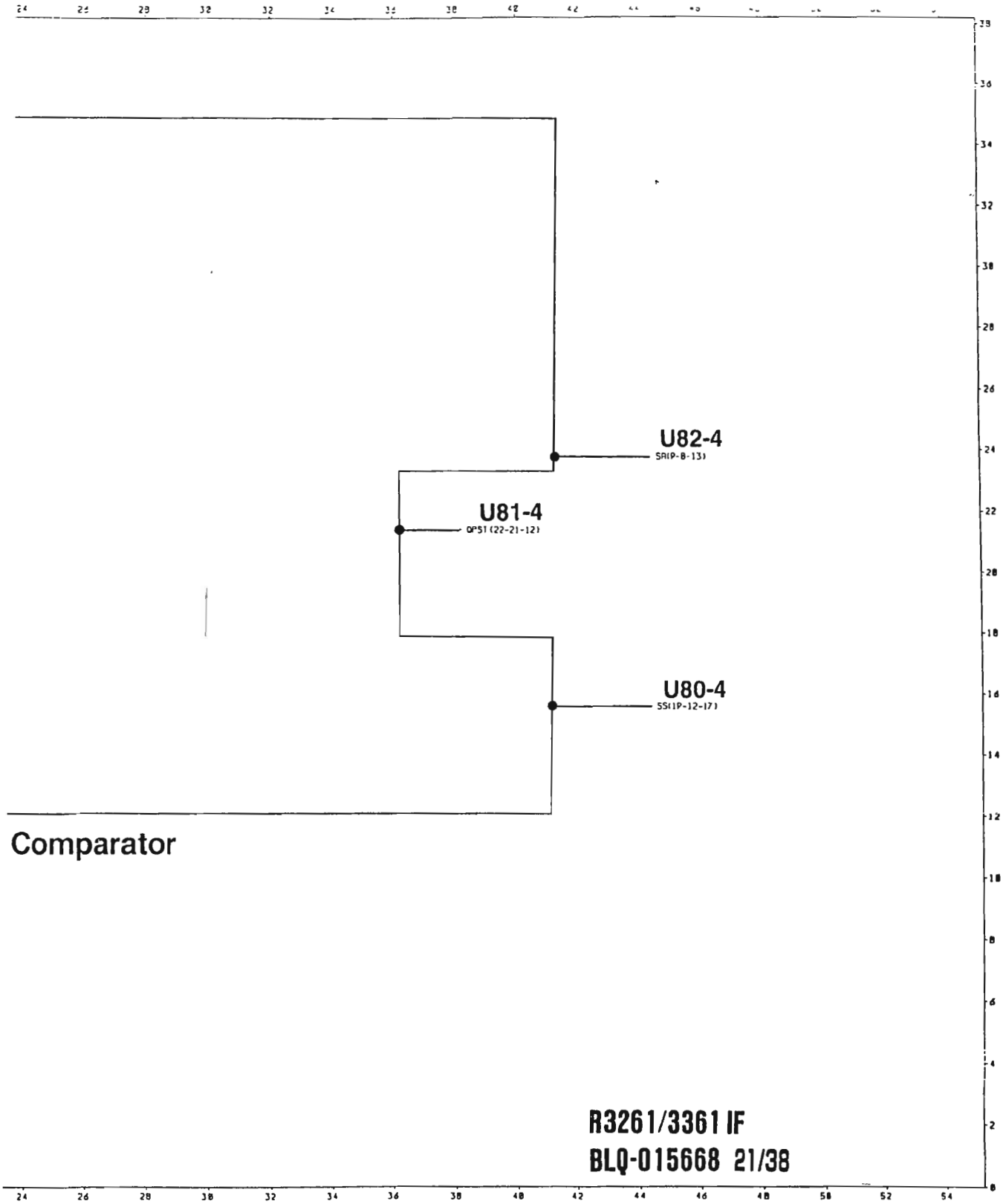
U82-4
SR(P-8-13)
U81-4
OPST(22-21-12)
U80-4
SS(1P-12-17)
R3261/3361 IF
BLQ-015668 21/38

Comparator

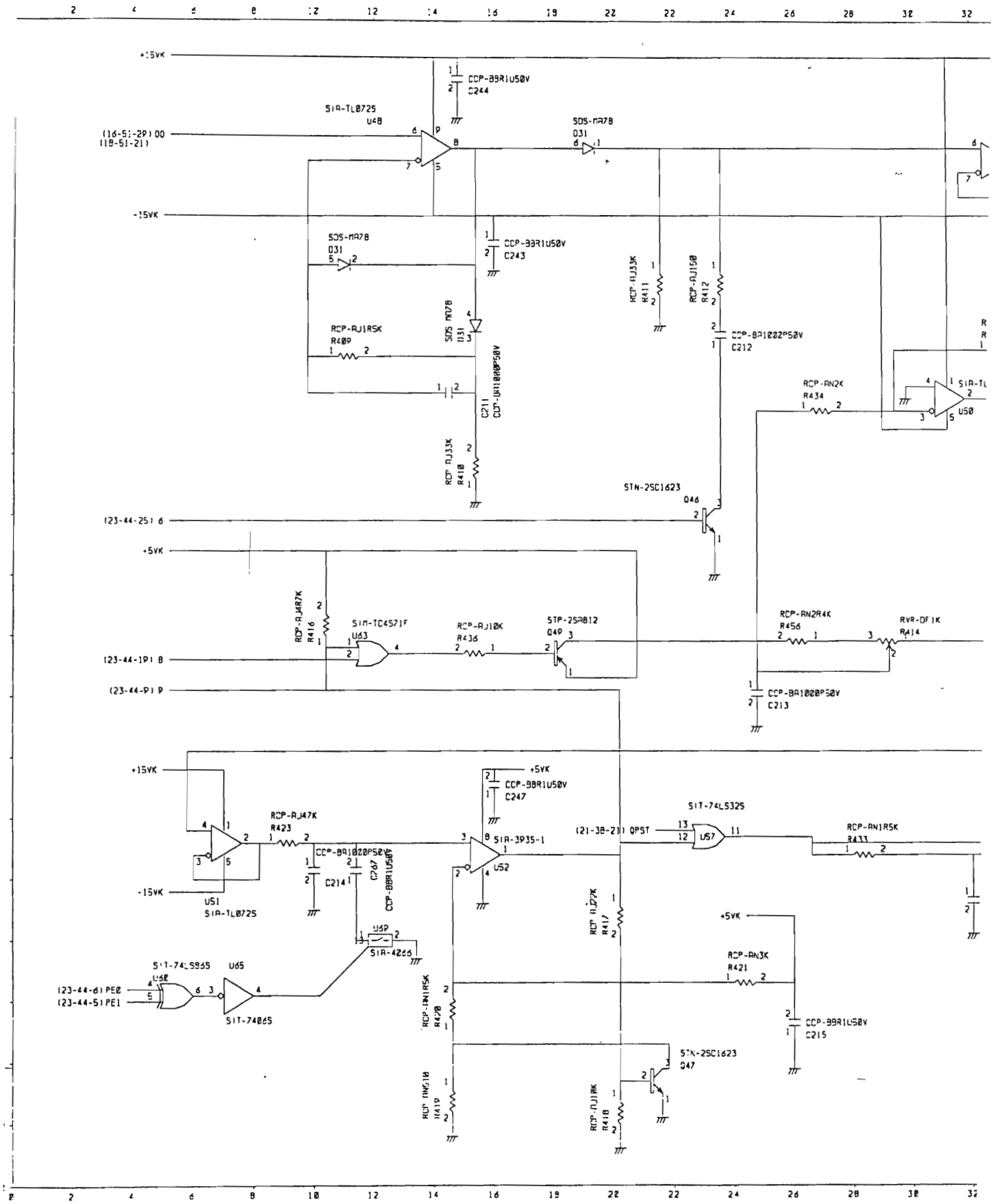
+15VK
-15VK
+5VK
CCP-BBR1U50V
C244
C243
C247
C215
C213
C212
C211
C214
C267
SIA-TL072S
U48
U50
U51
U52
U57
U65
U66
SDS-MA78
D31
RCP-RJ1R5K
R409
RCP-RJ33K
R410
RCP-RJ33K
R411
RCP-RJ15K
R412
RCP-RN2K
R434
RCP-RJ47K
R416
SIM-TC4571F
U63
RCP-RJ10K
R436
STP-2SA812
Q49
RCP-RN2R4K
R456
RVR-DF1K
R414
STN-2SC1623
Q46
Q47
RCP-RJ47K
R423
RCP-RN1R5K
R433
RCP-RN3K
R421
SIA-3935-1
SIT-74LS32S
SIT-74LS86S
SIT-7406S
SIA-4066
(16-51-29) D0
(18-51-21)
(23-44-25) 6
(23-44-19) 8
(23-44-9) 9
(23-44-6) PE0
(23-44-5) PE1
(21-38-21) QPST

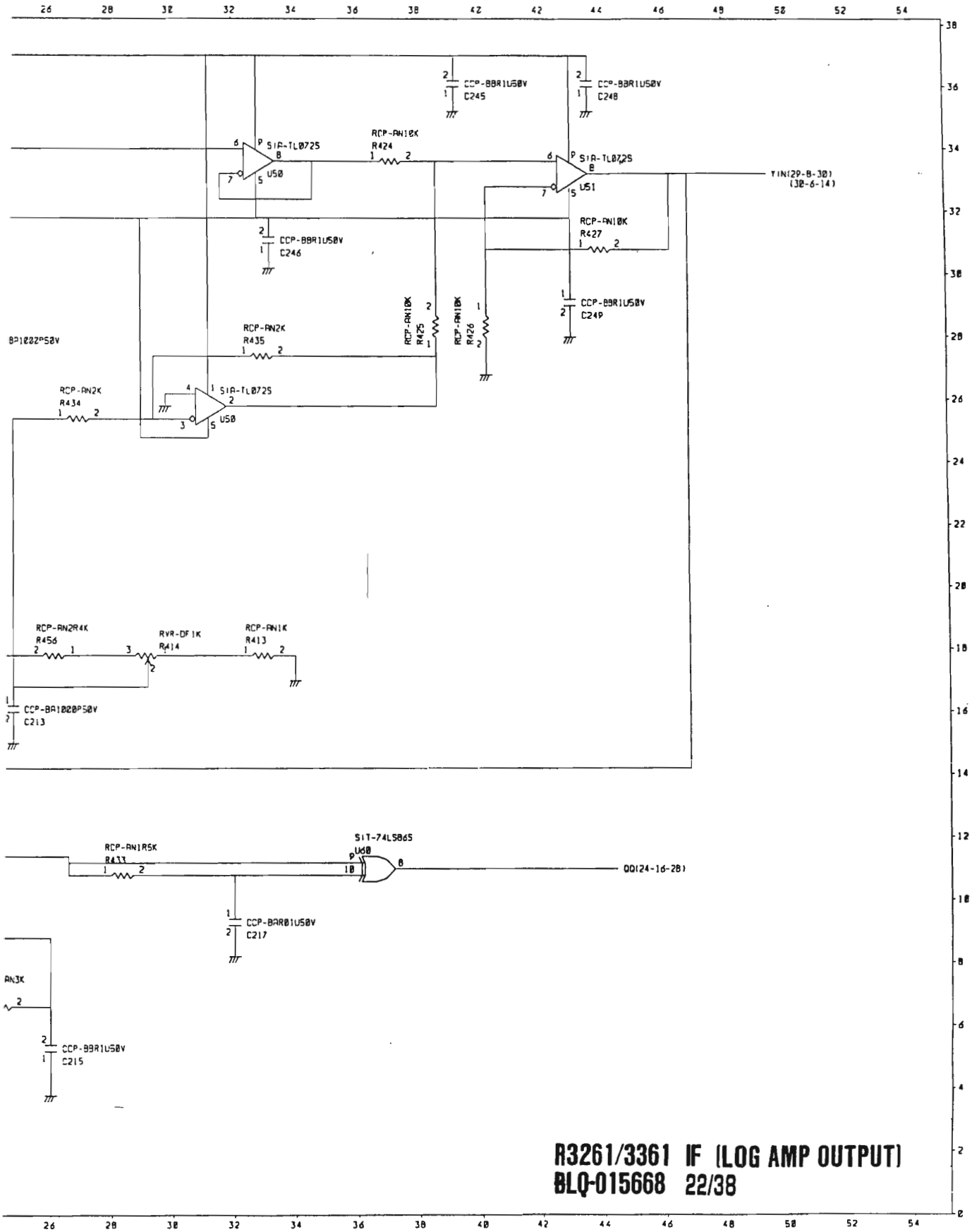

R3261/3361 IF (LOG AMP OUTPUT)
BLQ-015668 22/38

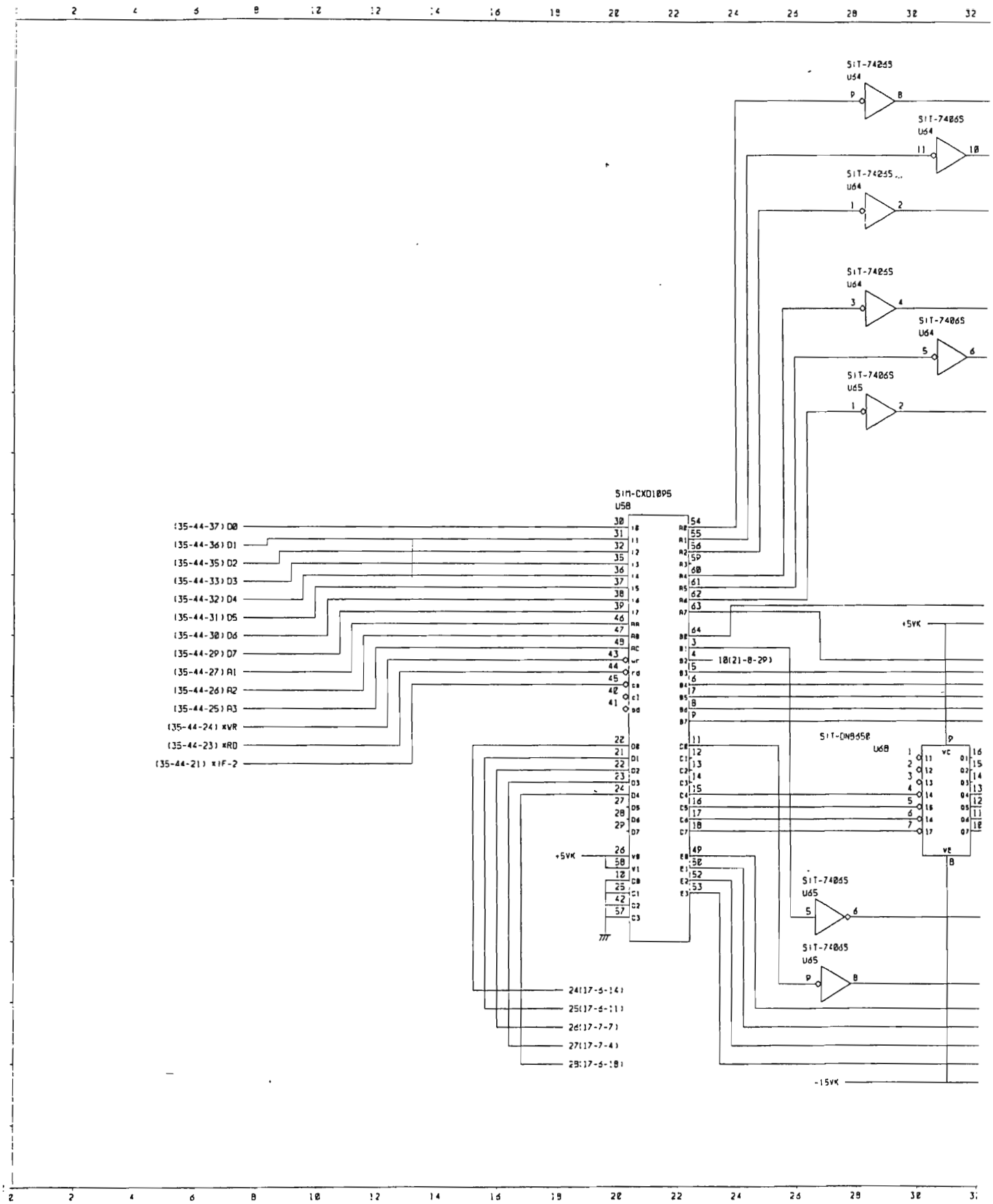
SIT-74205
U64
SIT-74065
U64
SIT-74205
U64
SIT-74205
U64
SIT-74065
U64
SIT-74065
U65
SIM-CXD1095
U58
(35-44-37) D0
(35-44-36) D1
(35-44-35) D2
(35-44-33) D3
(35-44-32) D4
(35-44-31) D5
(35-44-30) D6
(35-44-29) D7
(35-44-27) A1
(35-44-26) A2
(35-44-25) A3
(35-44-24) *VR
(35-44-23) *RD
(35-44-21) *IF-2
+5VK
10(2)-8-29)
SIT-DN8450
U68
SIT-74065
U65
SIT-74065
U65
24(17-6-14)
25(17-6-11)
26(17-7-7)
27(17-7-4)
28(17-6-18)
-15VK

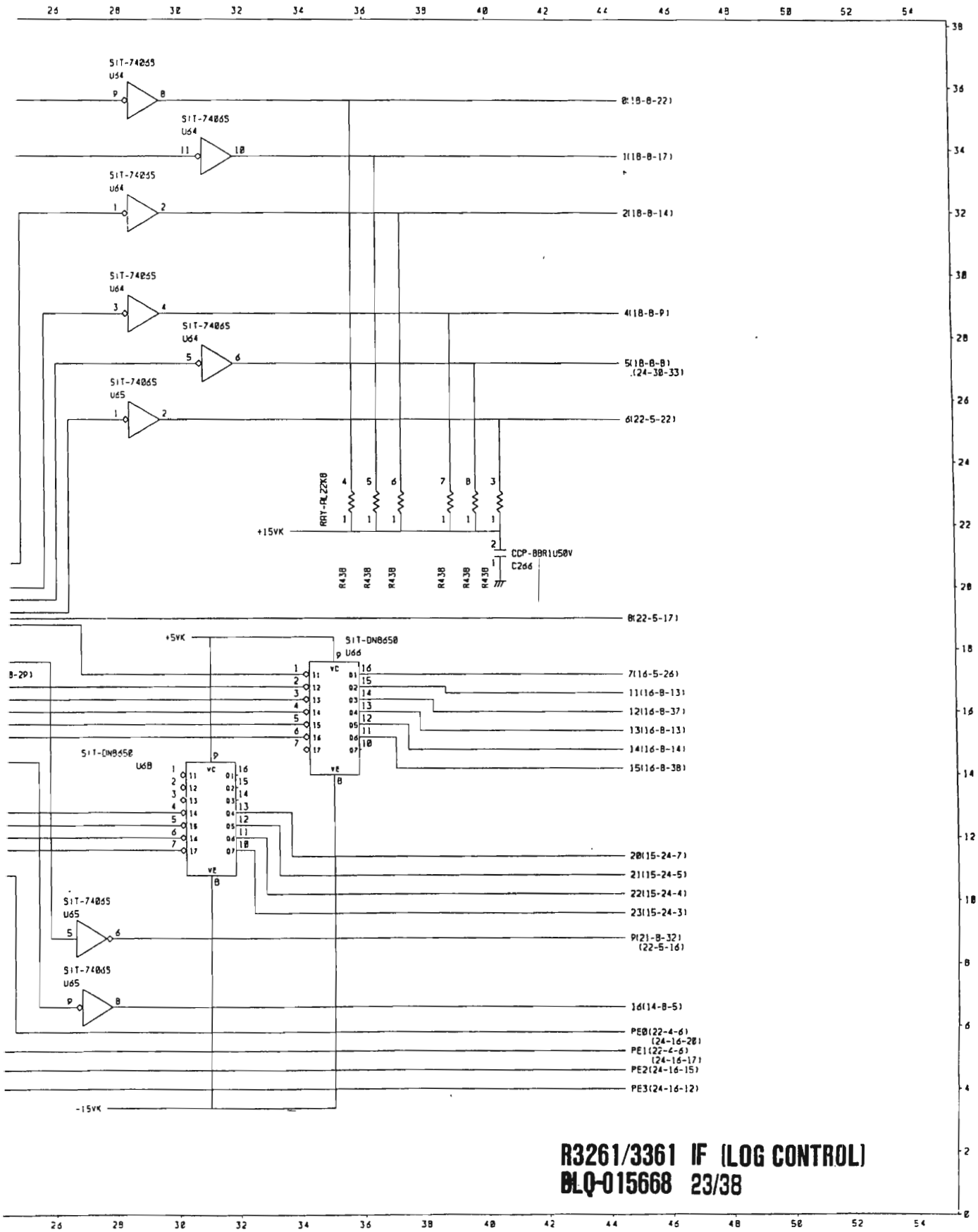

R3261/3361 IF (LOG CONTROL)
BLQ-015668 23/38

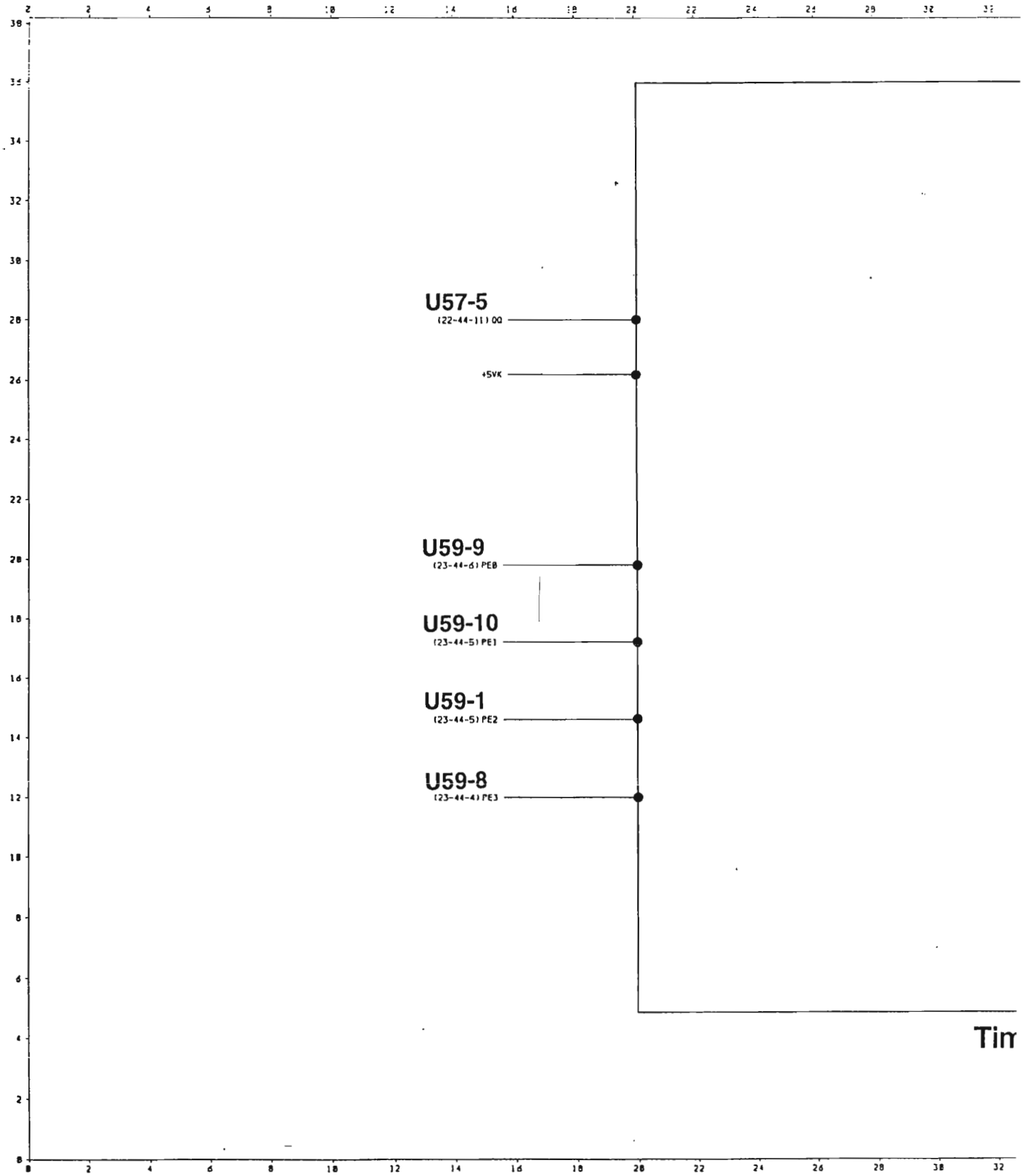
U57-5
(22-44-11) QQ
+5VK
U59-9
(23-44-6) PE8
U59-10
(23-44-5) PE1
U59-1
(23-44-5) PE2
U59-8
(23-44-4) PE3
Tim

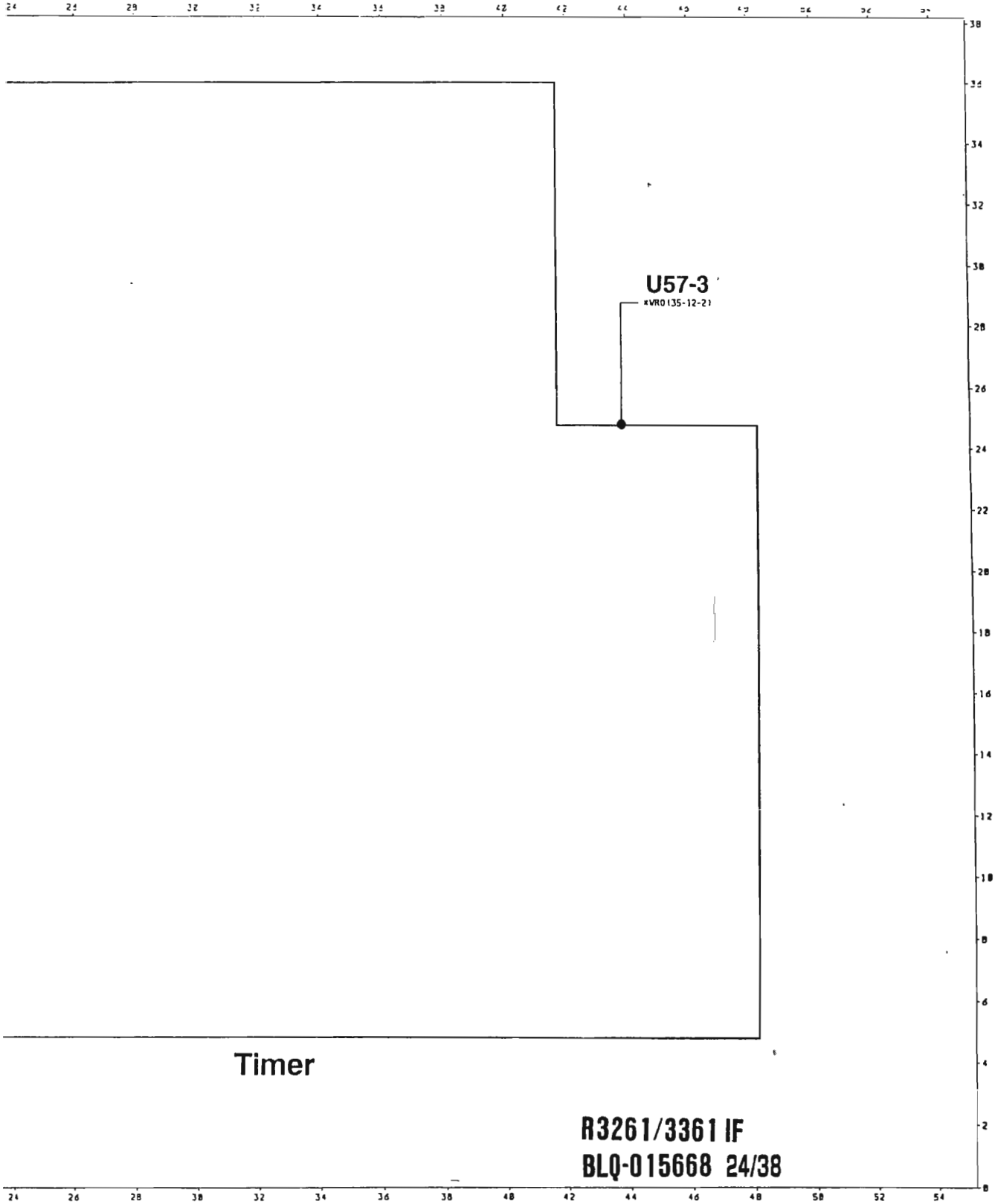
U57-3
Timer
R3261/3361 IF
BLQ-015668 24/38

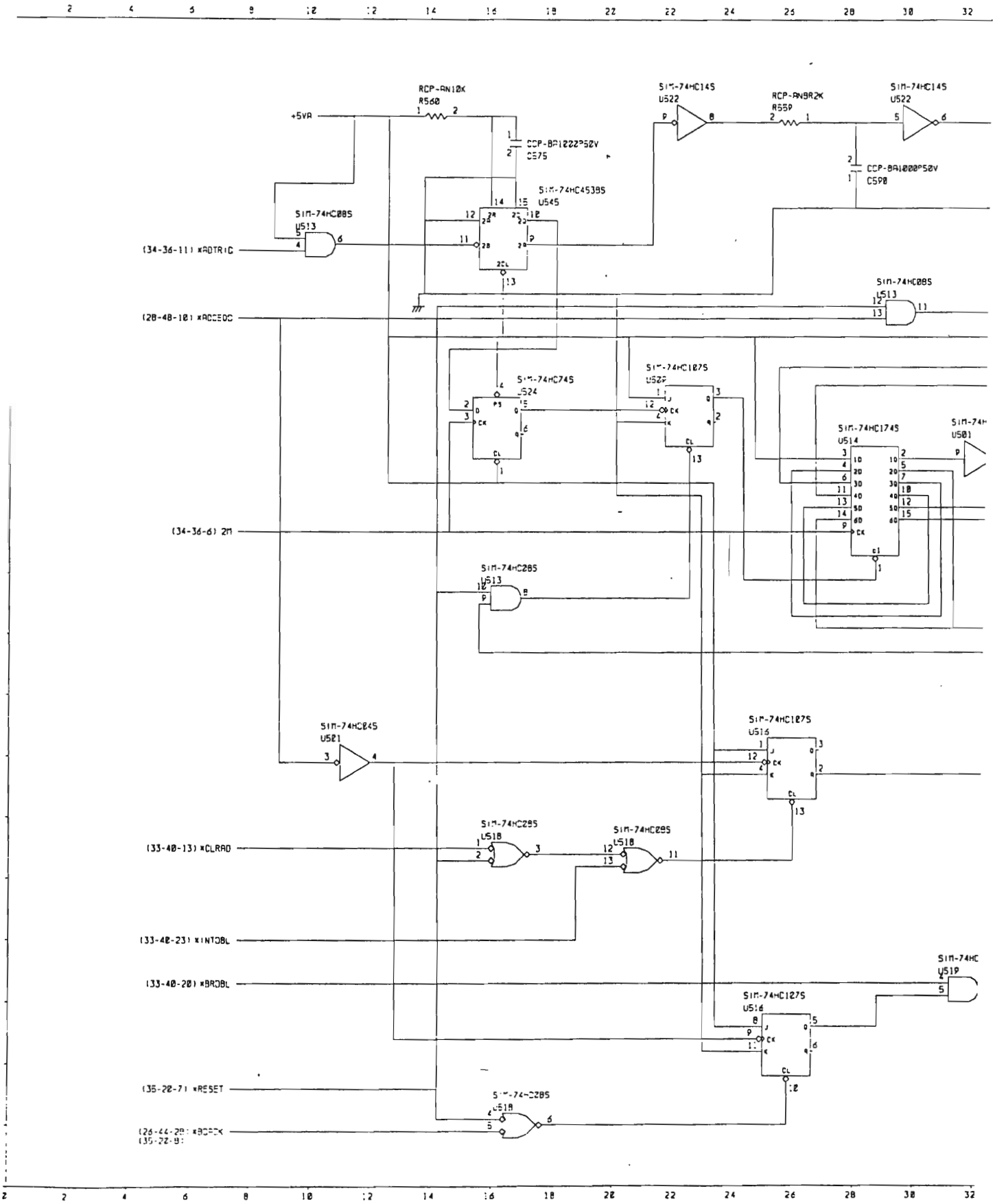
RCP-RN10K
R560
+5VA
CCP-BA1000P50V
C575
SIM-74HC14S
U522
RCP-RN9R2K
R559
CCP-BA1000P50V
C590
SIM-74HC4538S
U545
SIM-74HC08S
U513
(34-36-11) xADTRIC
(28-48-10) xACCEOC
SIM-74HC74S
U524
SIM-74HC107S
U529
SIM-74HC174S
U514
(34-36-6) 2M
SIM-74HC28S
U513
SIM-74HC04S
U521
SIM-74HC107S
U516
(33-40-13) xCLRAD
SIM-74HC28S
U518
(33-40-23) xINTOBL
(33-40-20) xBROBL
SIM-74HC107S
U516
(35-20-7) xRESET
SIM-74HC28S
U518

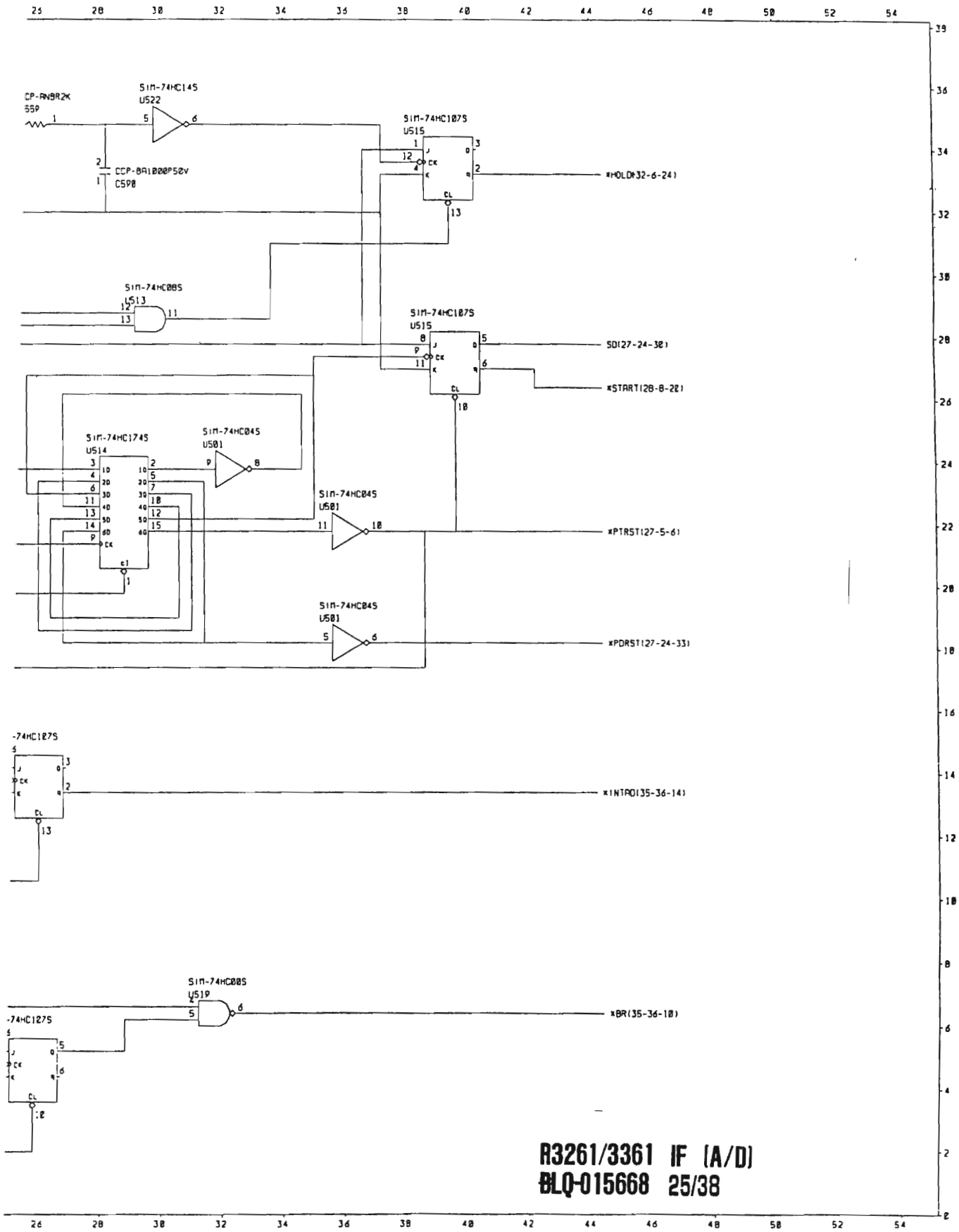

R3261/3361 IF (A/D)
BLQ-015668 25/38

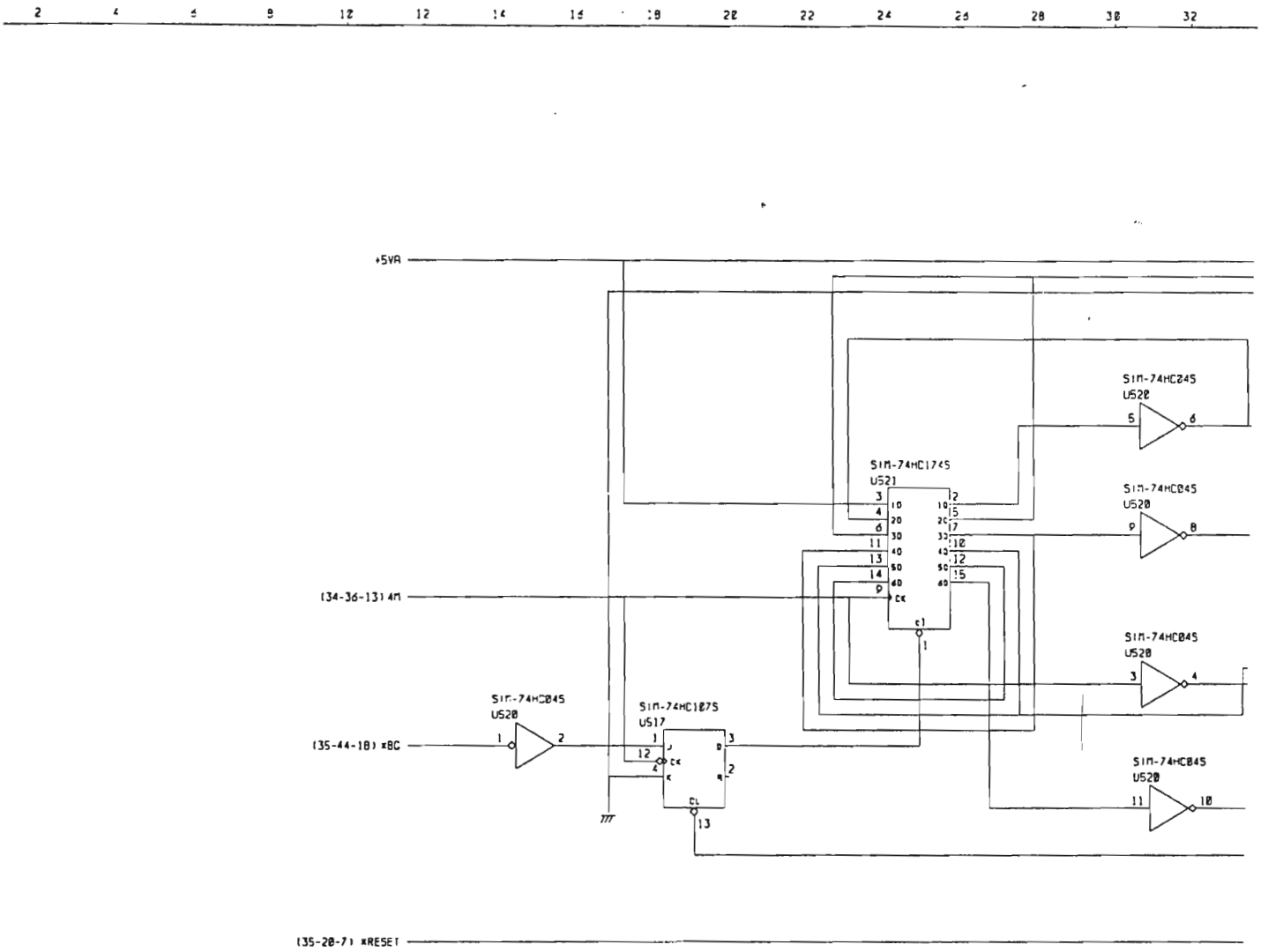
+5VA
SIM-74HC174S
U521
SIM-74HC04S
U520
(34-36-13) 4M
(35-44-18) xBC
SIM-74HC107S
U517
(35-20-7) xRESET

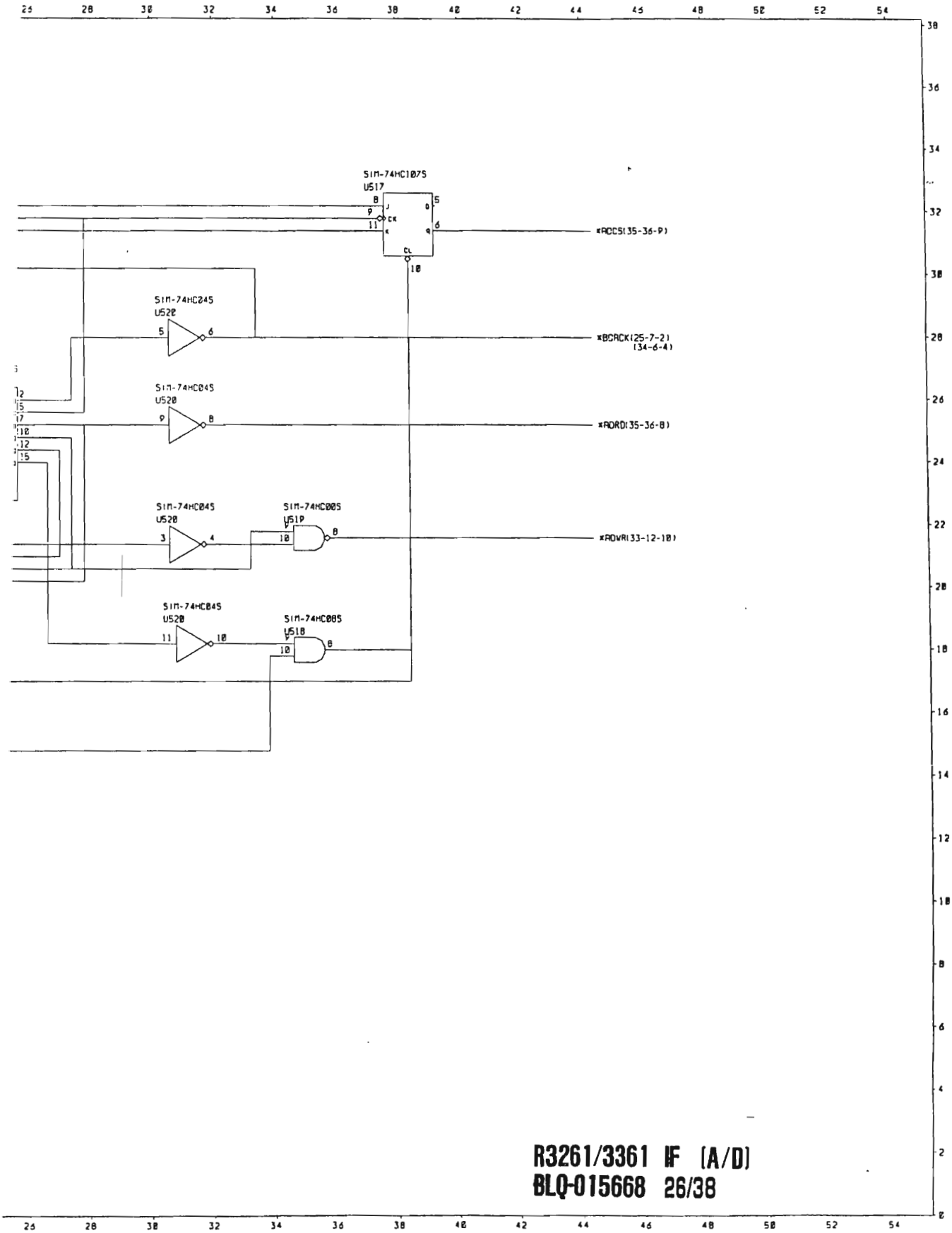

R3261/3361 IF (A/D)
BLQ-015668 26/38

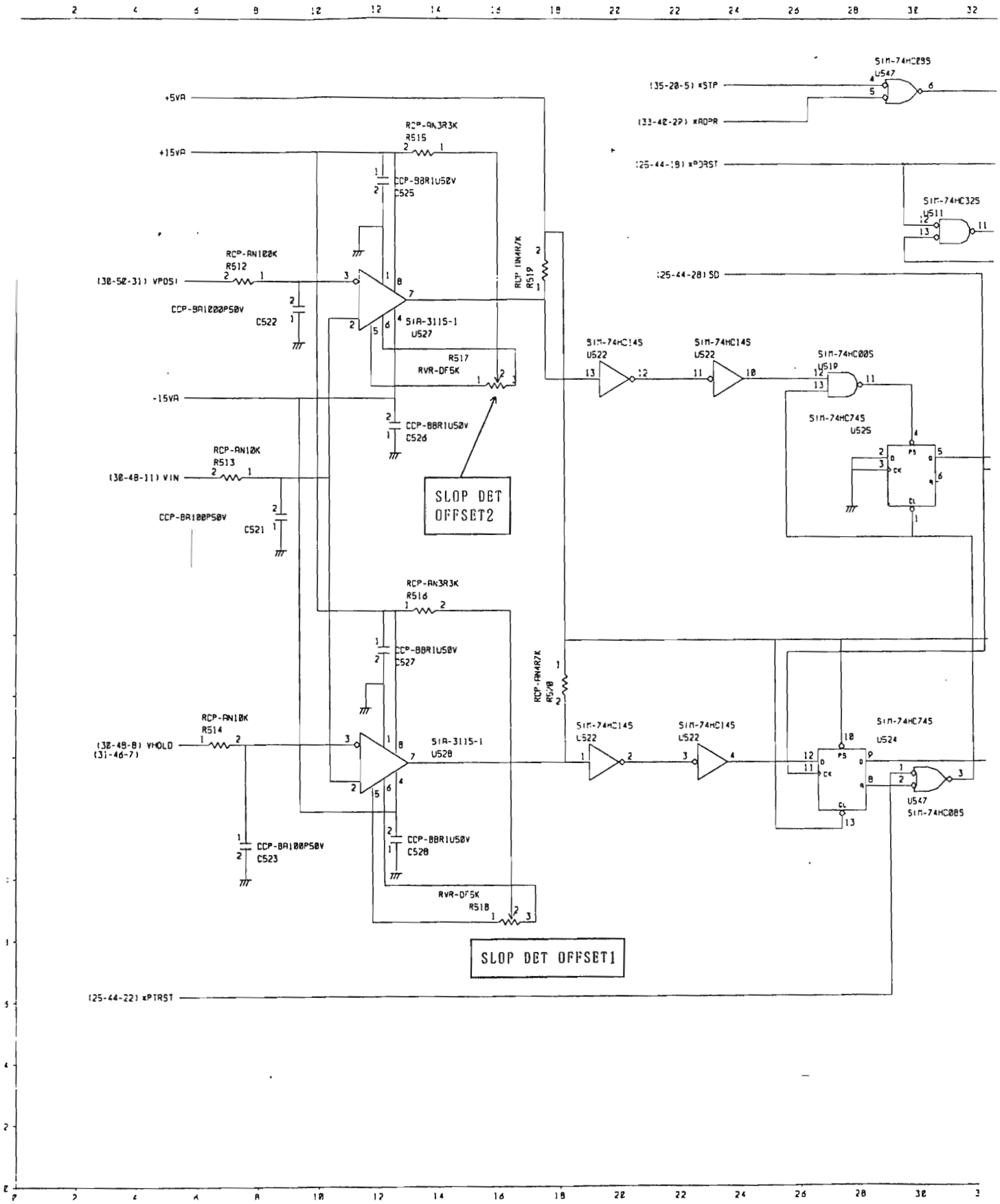
SIM-74HC09S
U547
(35-20-5) xSTP
(33-40-29) xADPR
(25-44-19) xPDRST
SIM-74HC32S
U511
+5VA
+15VA
RCP-AN3R3K
R515
CCP-BBR1U50V
C525
RCP-AN100K
R512
(30-50-31) VPOS1
CCP-BA1000P50V
C522
SIA-3115-1
U527
RCP-AN4R7K
R519
(25-44-28) SD
SIM-74HC14S
U522
SIM-74HC14S
U522
SIM-74HC00S
U519
R517
RVR-DF5K
-15VA
CCP-BBR1U50V
C526
SIM-74HC74S
U525
RCP-AN10K
R513
(30-48-11) VIN
CCP-BA100P50V
C521
SLOP DET
OFFSET2
RCP-AN3R3K
R516
CCP-BBR1U50V
C527
RCP-AN4R7K
R520
RCP-AN10K
R514
(30-48-8) VHOLD
(31-46-7)
SIA-3115-1
U528
SIM-74HC14S
U522
SIM-74HC14S
U522
SIM-74HC74S
U524
U547
SIM-74HC08S
CCP-BA100P50V
C523
CCP-BBR1U50V
C528
RVR-DF5K
R518
SLOP DET OFFSET1
(25-44-22) xPTRST

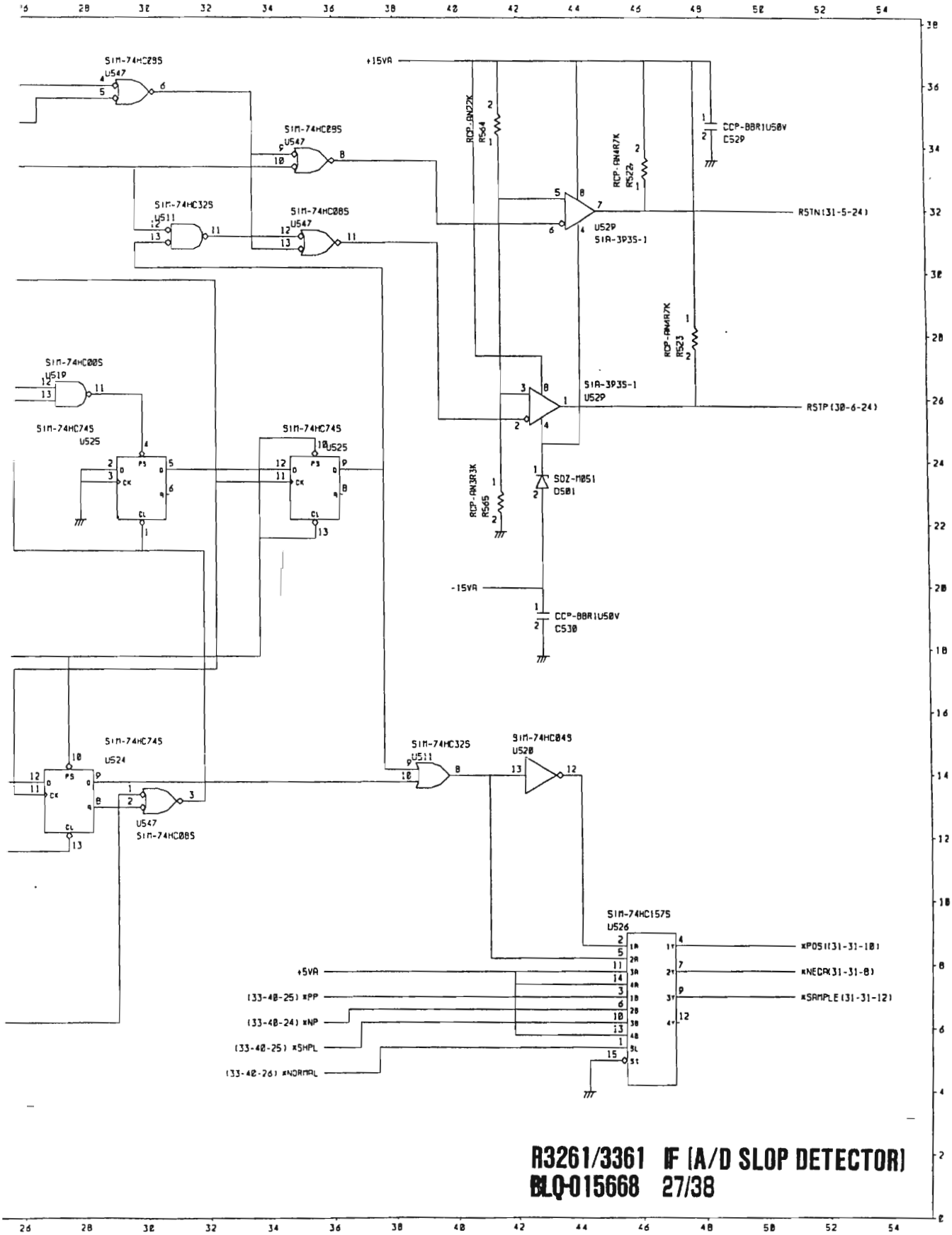

R3261/3361 IF (A/D SLOP DETECTOR)
BLQ-015668 27/38

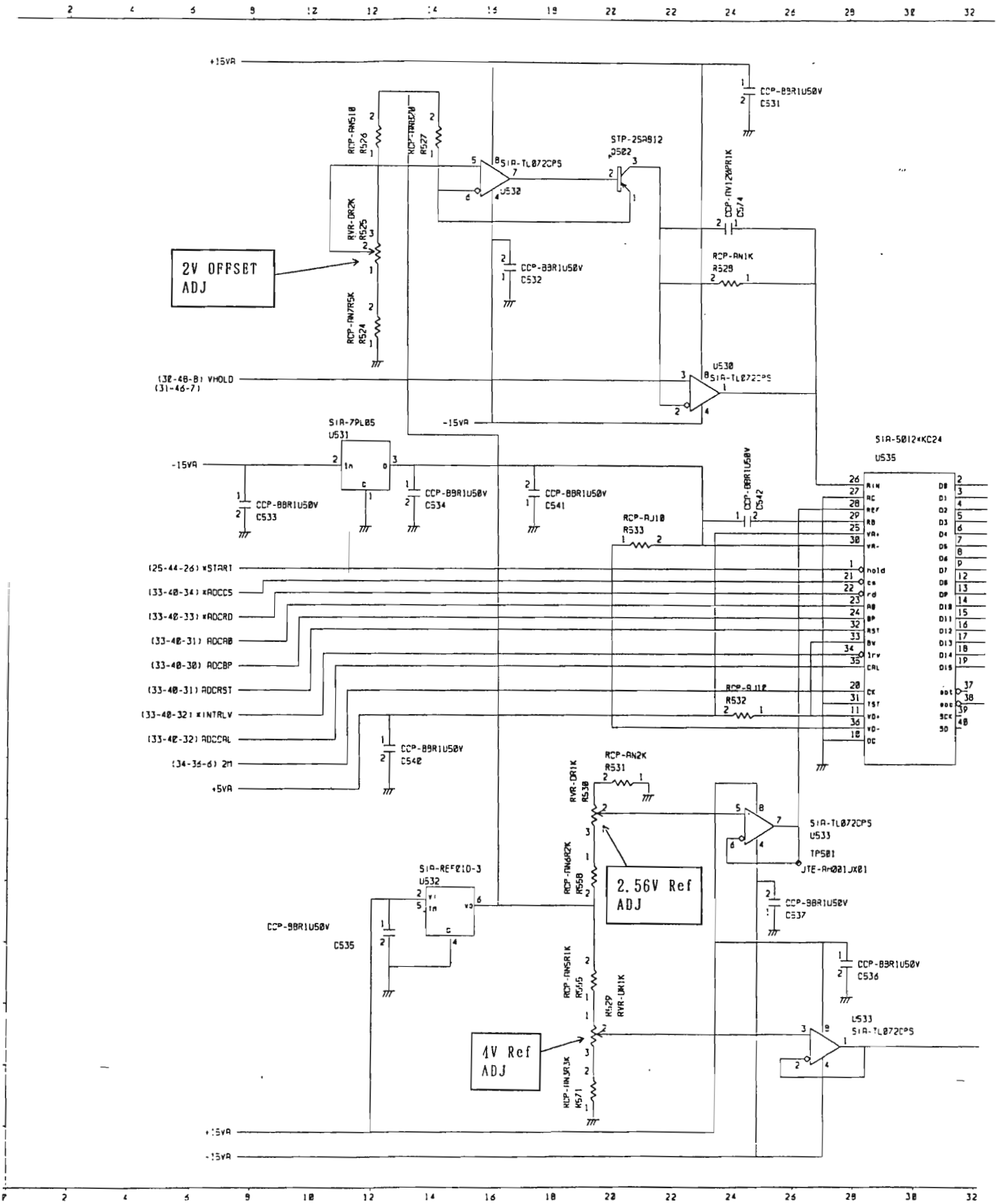
+15VA
CCP-B9R1U50V
C531
RCP-AN51Ω
R526
RCP-AN2Ω
R527
SIA-TL072CPS
U530
STP-2SA812
Q502
CCP-AV120PR1K
C574
RVR-DR2K
R525
2V OFFSET
ADJ
CCP-B8R1U50V
C532
RCP-AN1K
R529
RCP-AN7R5K
R524
U530
SIA-TL072CPS
(30-48-8) VHOLD
(31-46-7)
-15VA
SIA-7PL05
U531
SIA-5012*KC24
U535
-15VA
CCP-B8R1U50V
C533
CCP-B9R1U50V
C534
CCP-B8R1U50V
C541
CCP-B8R1U50V
C542
RCP-AJ1Ω
R533
(25-44-26) *START
(33-40-34) *ADCCS
(33-40-33) *ADCRD
(33-40-31) ADCAB
(33-40-30) ADCBP
(33-40-31) ADCRST
(33-40-32) *INTRLV
(33-40-32) ADCCAL
(34-35-6) 2M
+5VA
RCP-AJ1Ω
R532
CCP-B9R1U50V
C540
RCP-AN2K
R531
RVR-DR1K
R538
SIA-TL072CPS
U533
TP501
JTE-AM001JX01
RCP-AN6R2K
R558
2.56V Ref
ADJ
SIA-REF010-3
U532
CCP-B8R1U50V
C537
CCP-9BR1U50V
C535
CCP-B8R1U50V
C536
RCP-AN5R1K
R545
R529
RVR-DR1K
U533
SIA-TL072CPS
1V Ref
ADJ
RCP-AN3R3K
R571
+15VA
-15VA

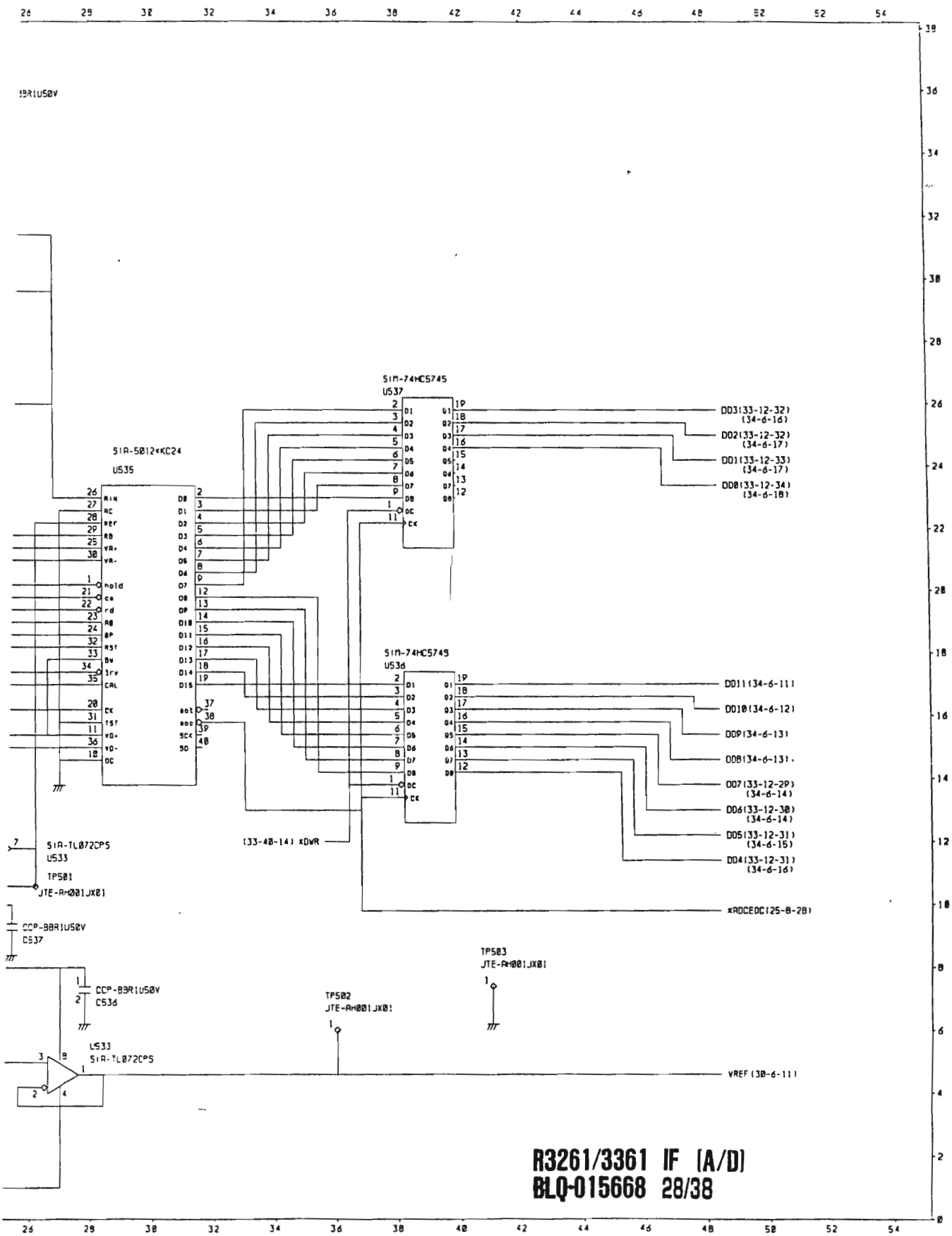

R3261/3361 IF (A/D)
BLQ-015668 28/38

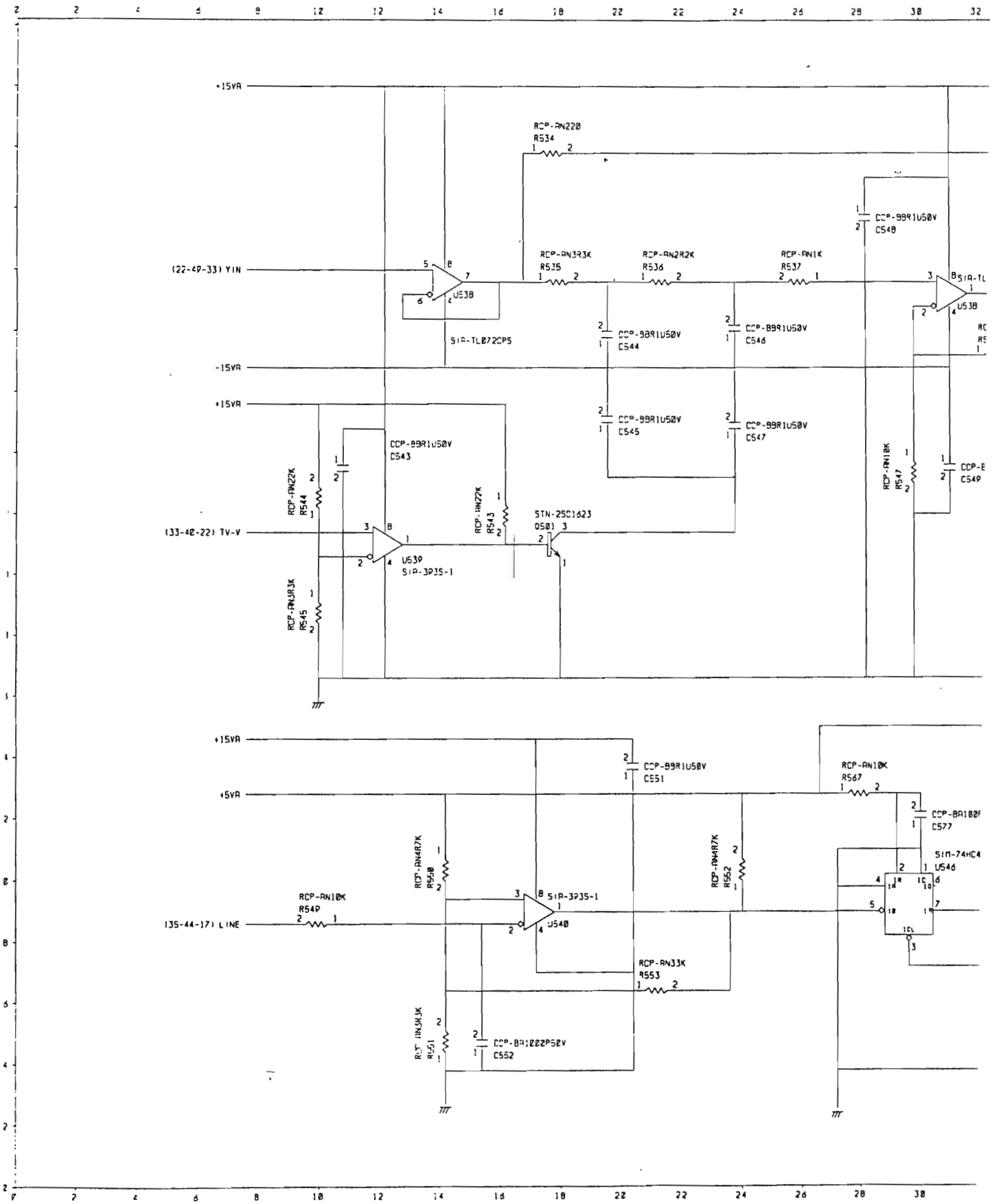
+15VA
-15VA
(22-49-33) YIN
(33-40-22) TV-V
(35-44-17) LINE
+5VA
RCP-AN220
R534
RCP-AN3R3K
R535
RCP-AN2R2K
R536
RCP-AN1K
R537
CCP-B9R1U50V
C548
CCP-B9R1U50V
C544
CCP-B9R1U50V
C546
CCP-B9R1U50V
C545
CCP-B9R1U50V
C547
CCP-B9R1U50V
C543
U538
SIA-TL072CP5
U539
SIA-3P3S-1
RCP-AN22K
R544
RCP-AN3R3K
R545
RCP-AN22K
R543
STN-2SC1623
Q501
RCP-AN10K
R547
CCP-B9R1U50V
C551
RCP-AN10K
R567
CCP-B9R1U50V
C577
STN-74HC4
U546
RCP-AN4R7K
R550
RCP-AN4R7K
R552
RCP-AN10K
R549
U540
RCP-AN33K
R553
RCP-AN3R3K
R551
CCP-B9R1U50V
C552

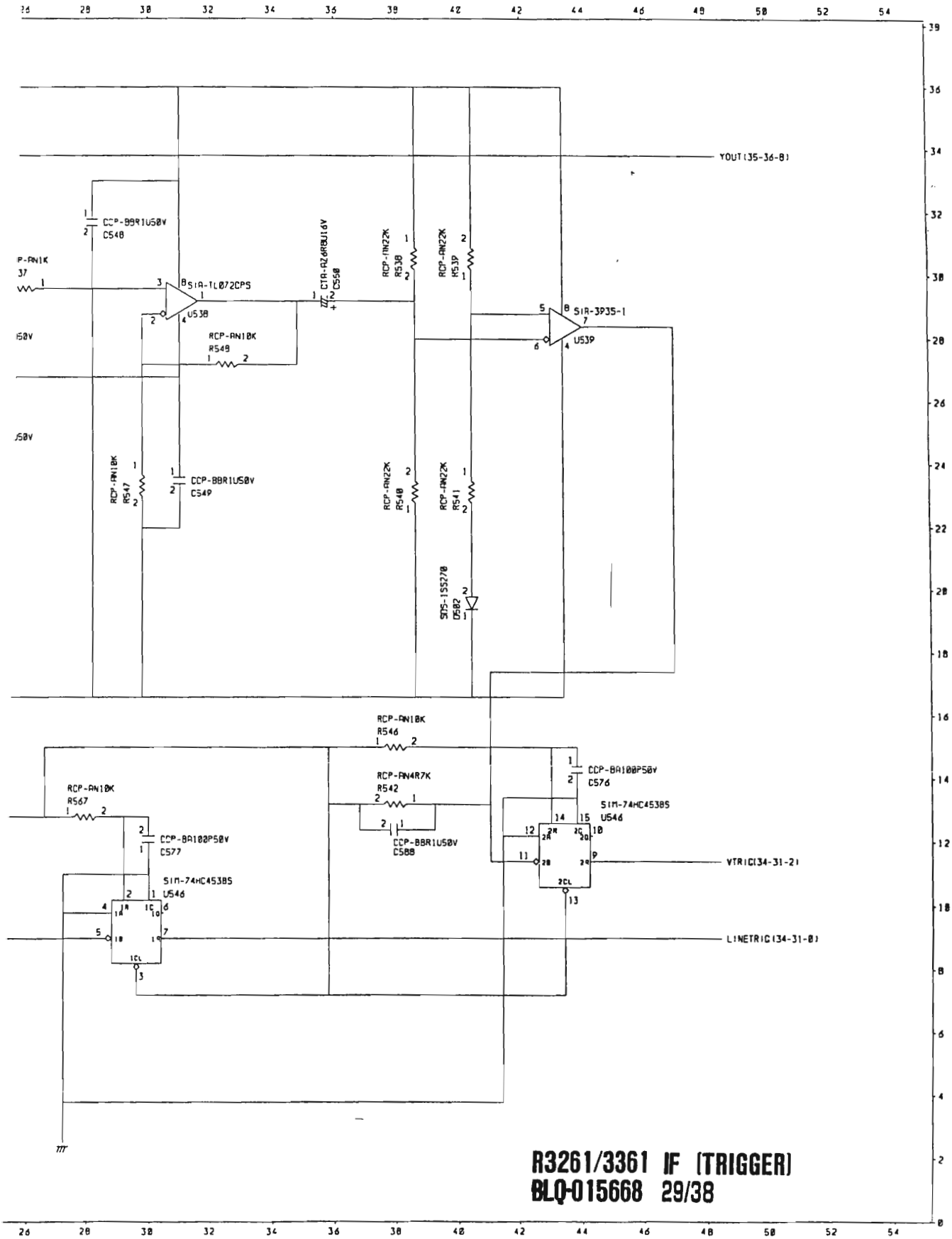

R3261/3361 IF (TRIGGER)
BLQ-015668 29/38

P11 - P23

U548

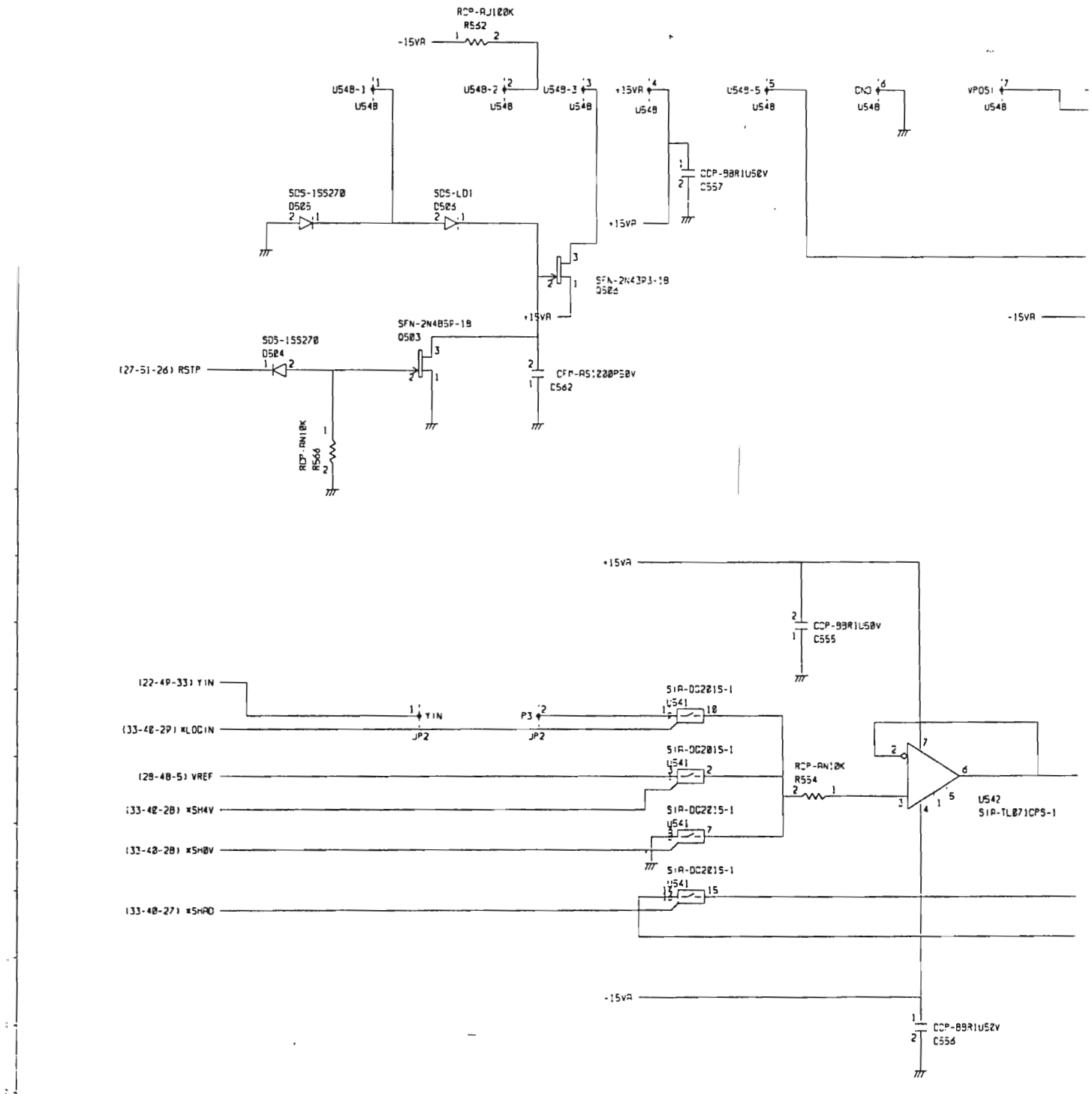
RCP-AJ100K
R562
-15VA
U548-1
U548
U548-2
U548-3
+15VA
U548-5
GND
VPOS1
CCP-B8R1U50V
C557
SDS-1SS270
D505
SDS-LD1
D506
SFN-2N4393-1B
Q504
SFN-2N4859-1B
Q503
SDS-1SS270
D504
(27-51-26) RSTP
CFM-A51220P50V
C562
RCP-RN10K
R566
(22-49-33) YIN
(33-40-29) *LOCIN
(28-48-5) VREF
(33-40-28) *SH4V
(33-40-28) *SH0V
(33-40-27) *SHAD
YIN
JP2
P3
SIA-DG221S-1
U541
SIA-DG201S-1
RCP-RN10K
R554
U542
SIA-TL071CPS-1
CCP-B8R1U50V
C555
CCP-B8R1U52V
C556

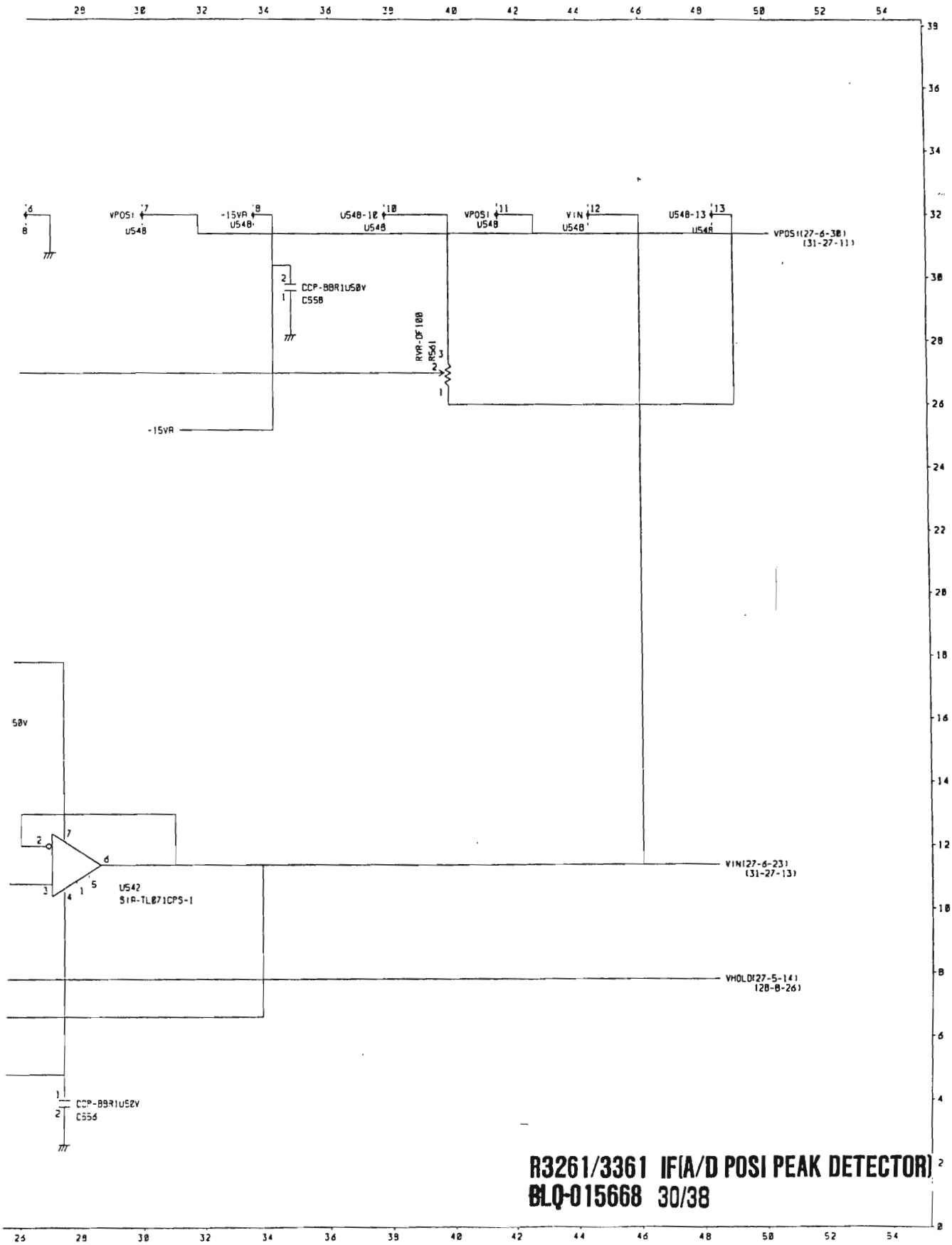

R3261/3361 IF(A/D POSI PEAK DETECTOR)
BLQ-015668 30/38

P31 - P43
U549

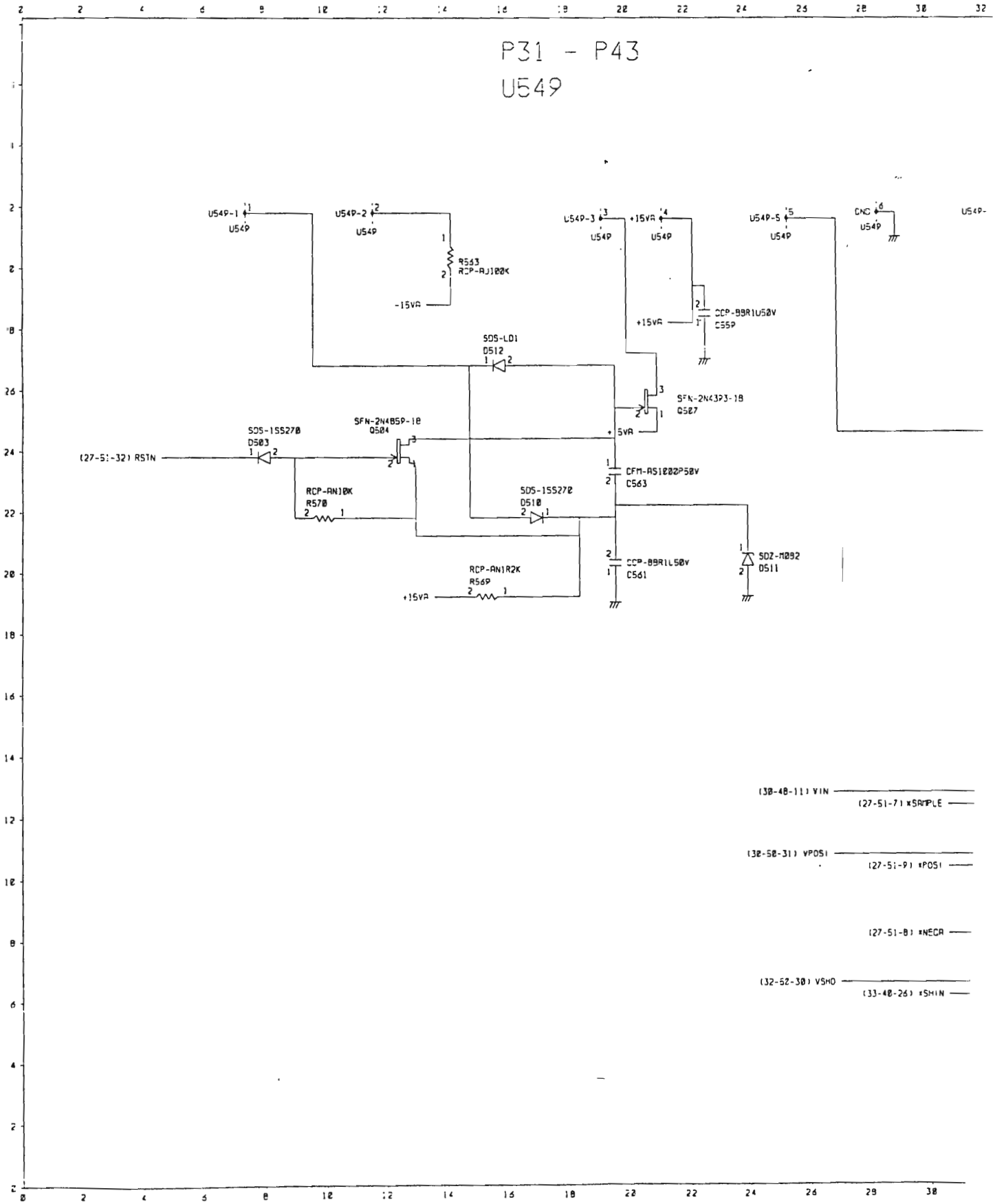
U549-1
U549
U549-2
U549
R563
RCP-AJ100K
-15VA
U549-3
U549
+15VA
U549
CCP-BBR1U50V
C559
+15VA
U549-5
U549
GND
U549
U549-
SDS-LD1
D512
SFN-2N4393-18
Q507
SFN-2N4859-18
Q504
SDS-1SS270
D503
(27-51-32) RSTN
+5VA
CFM-AS1002P50V
C563
RCP-AN10K
R570
SDS-1SS270
D510
CCP-BBR1L50V
C561
SDZ-M092
D511
RCP-AN1R2K
R569
+15VA
(30-48-11) VIN
(27-51-7) xSAMPLE
(30-50-31) VPOS1
(27-51-9) xPOS1
(27-51-8) xNEGR
(32-52-30) VSHO
(33-40-26) xSHIN

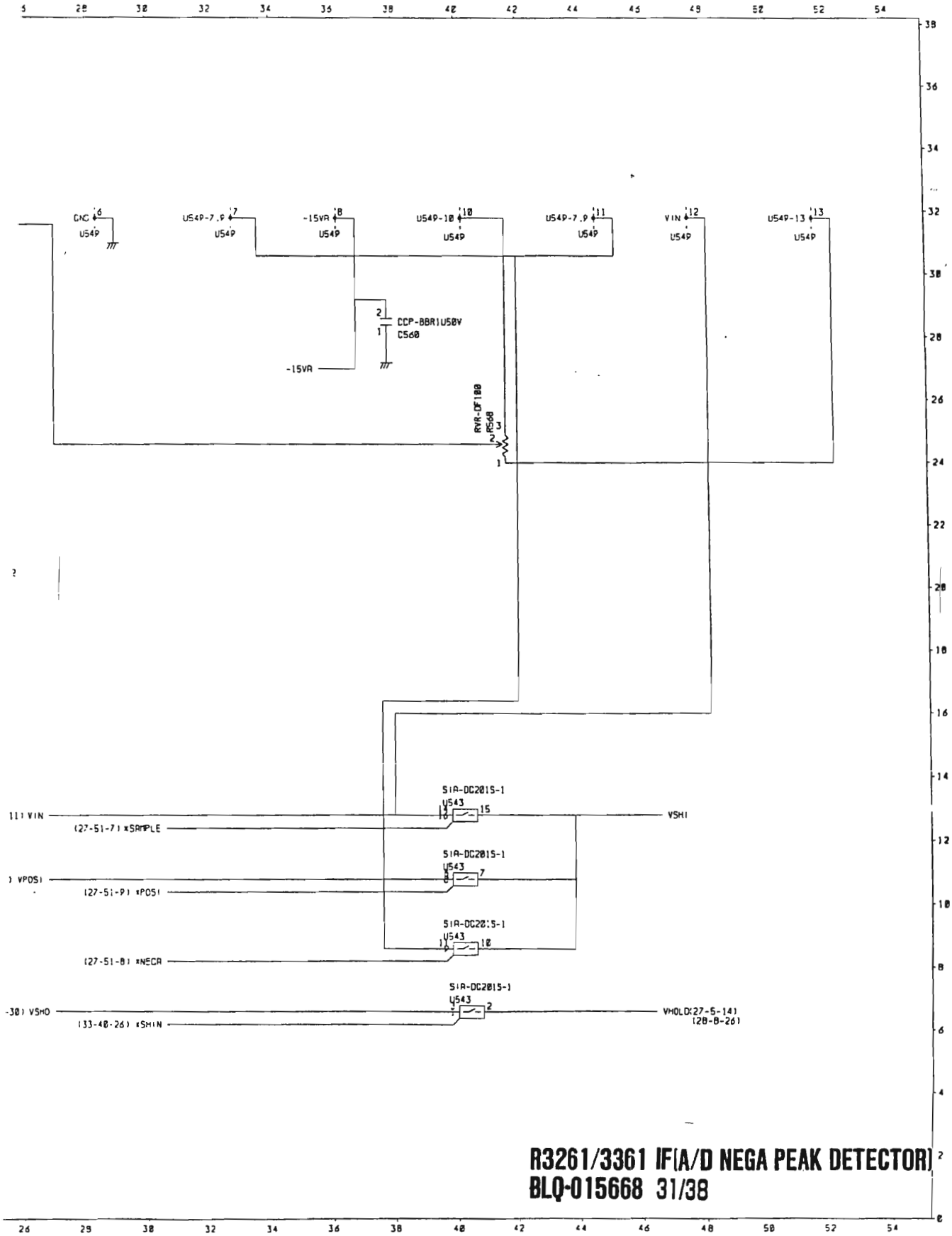

R3261/3361 IF(A/D NEGA PEAK DETECTOR)
BLQ-015668 31/38

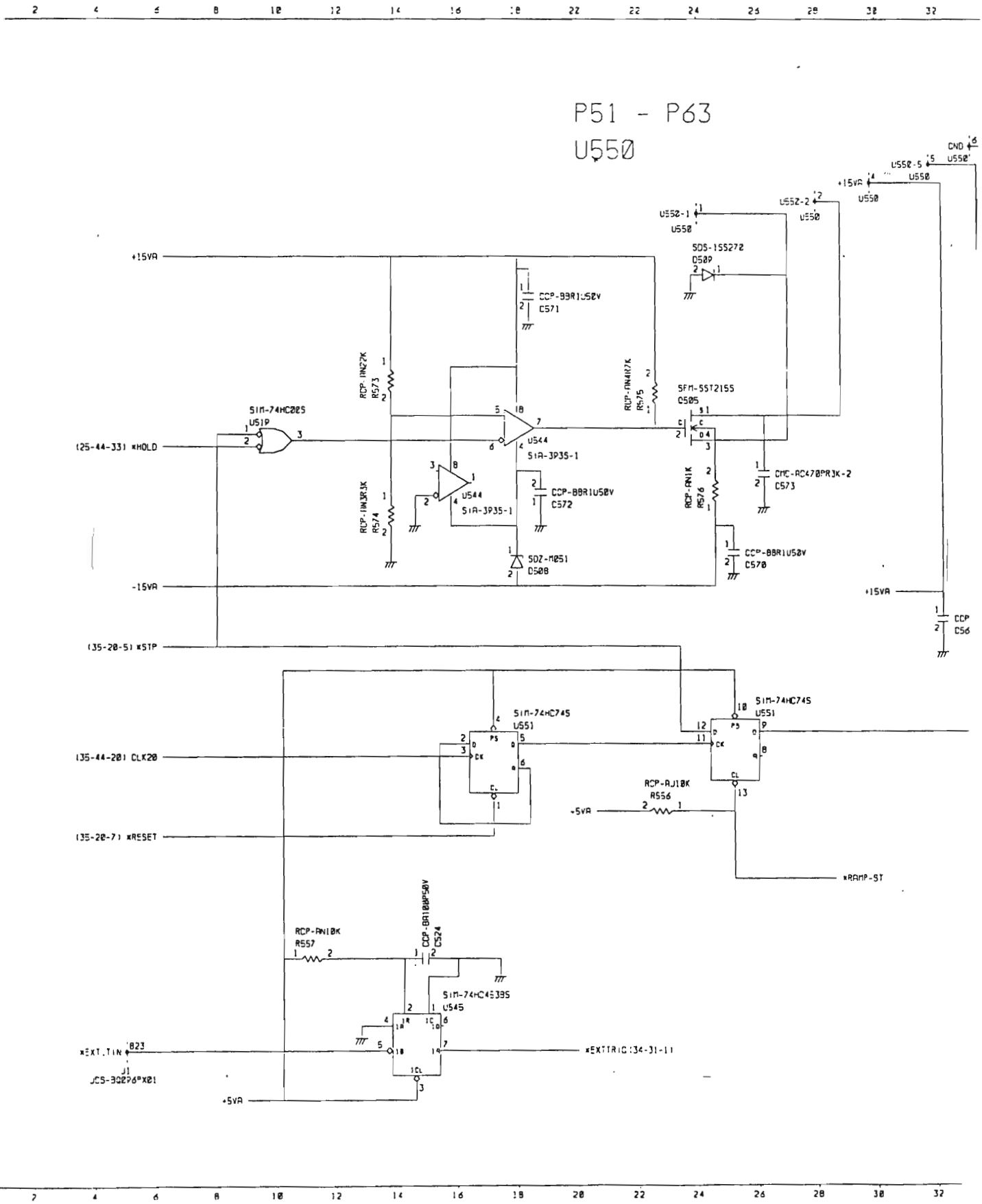
P51 - P63
U550
GND
U550-5
U550
+15VA
U550-2
U550
U550-1
U550
SDS-1SS272
D509
CCP-B8R1U50V
C571
RCP-1N27K
R573
RCP-AN47K
R575
SFM-SST2155
Q505
SIM-74HC205
U519
(25-44-33) xHOLD
U544
S1A-3P35-1
U544
S1A-3P35-1
CCP-B8R1U50V
C572
CMC-RC470PR3K-2
C573
RCP-1N3R3K
R574
RCP-AN1K
R576
SDZ-M051
D508
CCP-B8R1U50V
C570
-15VA
+15VA
CCP
C56
(35-20-5) xSTP
SIM-74HC74S
U551
SIM-74HC74S
U551
(35-44-20) CLK20
RCP-AJ10K
R556
+5VA
(35-20-7) xRESET
xRAMP-ST
RCP-AN10K
R557
CCP-BR100P50V
C524
SIM-74HC4539S
U545
xEXT.TIN
J1
JCS-3Q2P6PX01
+5VA
xEXTTRIG:34-31-11

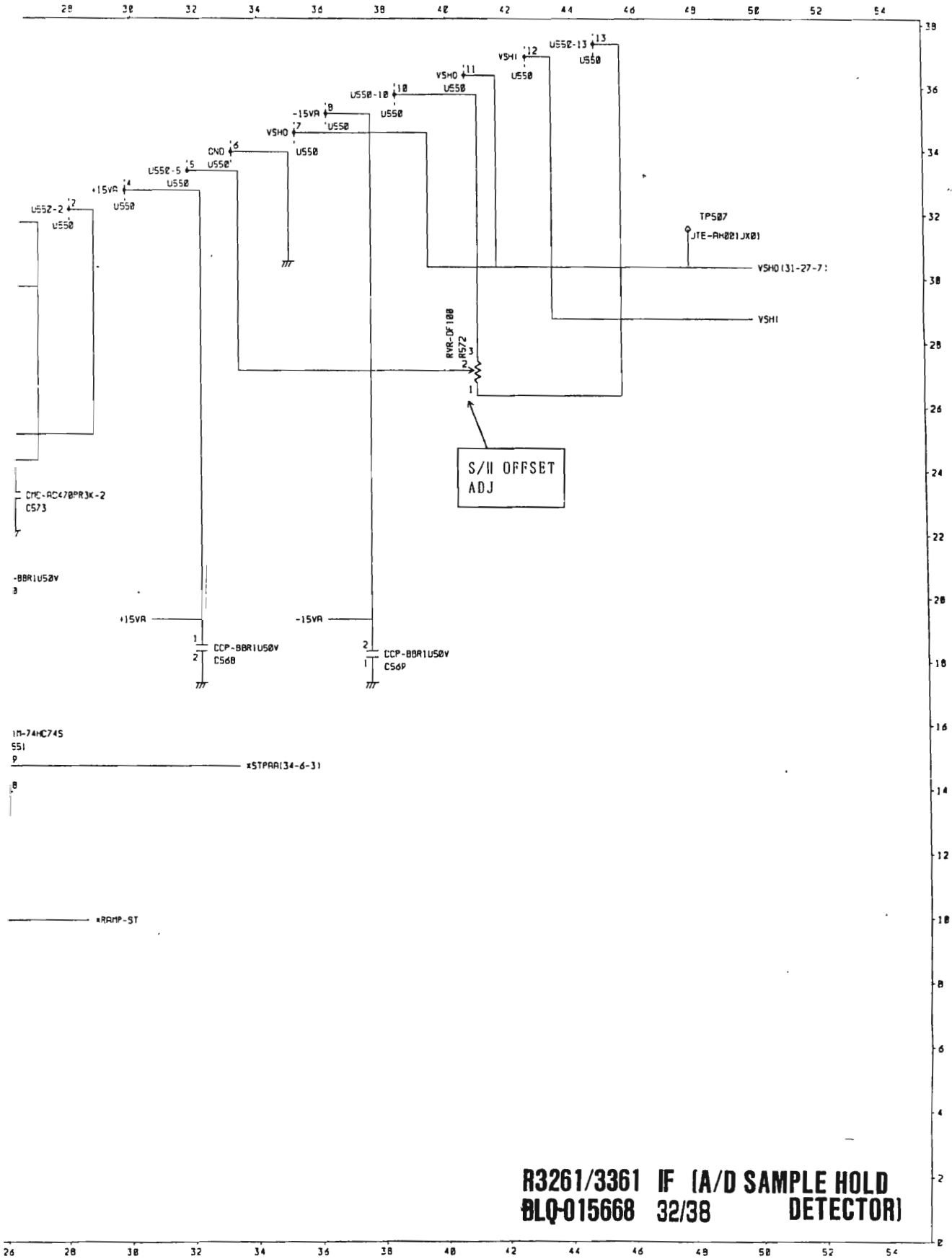

R3261/3361 IF (A/D SAMPLE HOLD DETECTOR)
BLQ-015668 32/38

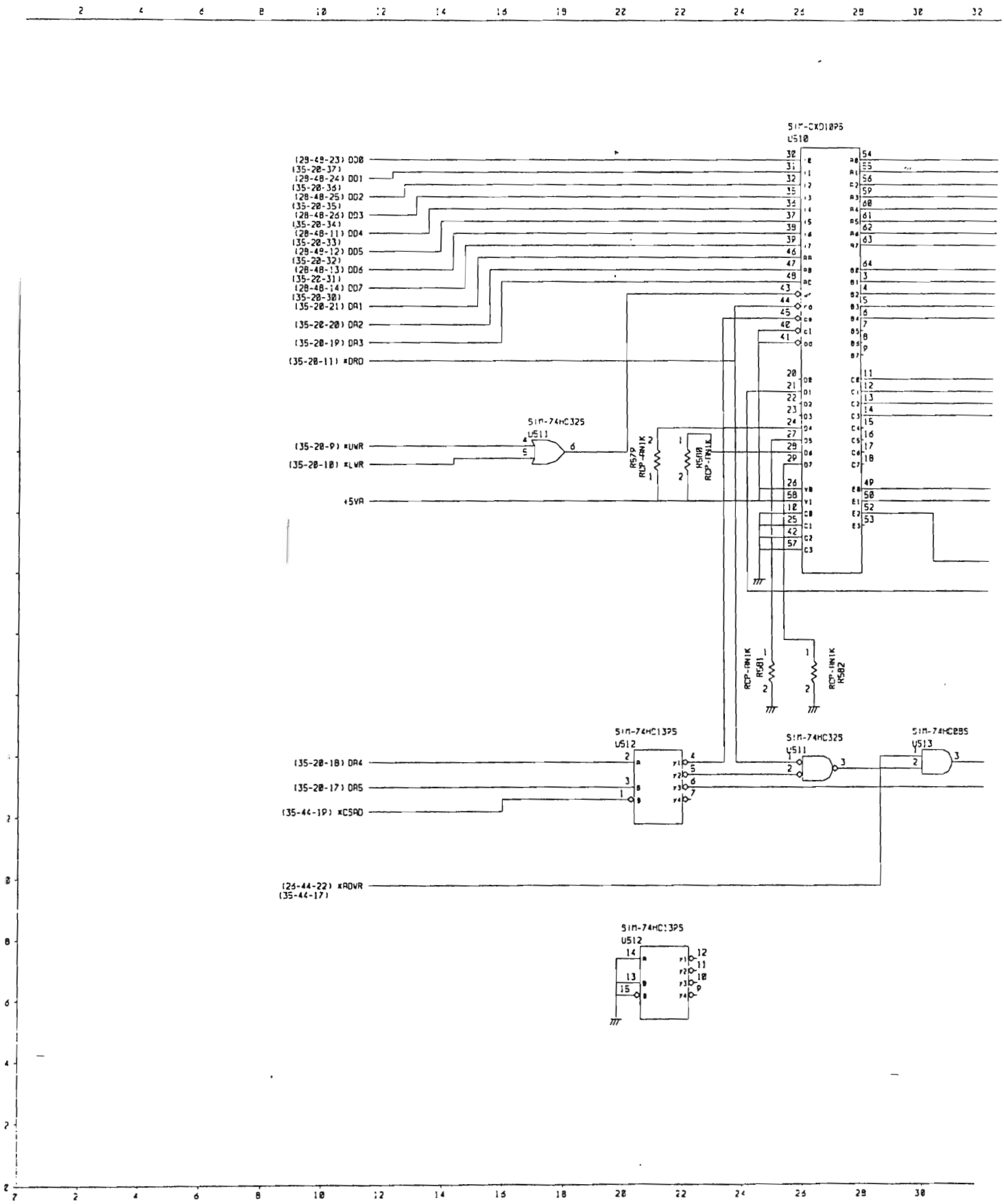
SIM-CXD1095
U510
(29-48-23) DD0
(35-20-37)
(29-48-24) DD1
(35-20-36)
(28-48-25) DD2
(35-20-35)
(28-48-26) DD3
(35-20-34)
(28-48-11) DD4
(35-20-33)
(29-49-12) DD5
(35-20-32)
(28-48-13) DD6
(35-22-31)
(28-48-14) DD7
(35-20-30)
(35-20-21) DA1
(35-20-20) DA2
(35-20-19) DA3
(35-20-11) *DRD
SIM-74HC325
U511
(35-20-9) *UWR
(35-20-10) *LWR
+5VA
R579
RCP-1MIK
R580
RCP-1MIK
RCP-1MIK
R581
RCP-1MIK
R582
SIM-74HC139S
U512
(35-20-18) DA4
(35-20-17) DA5
(35-44-19) *CSAD
(26-44-22) *ADWR
(35-44-17)
SIM-74HC325
U511
SIM-74HC08S
U513
SIM-74HC139S
U512

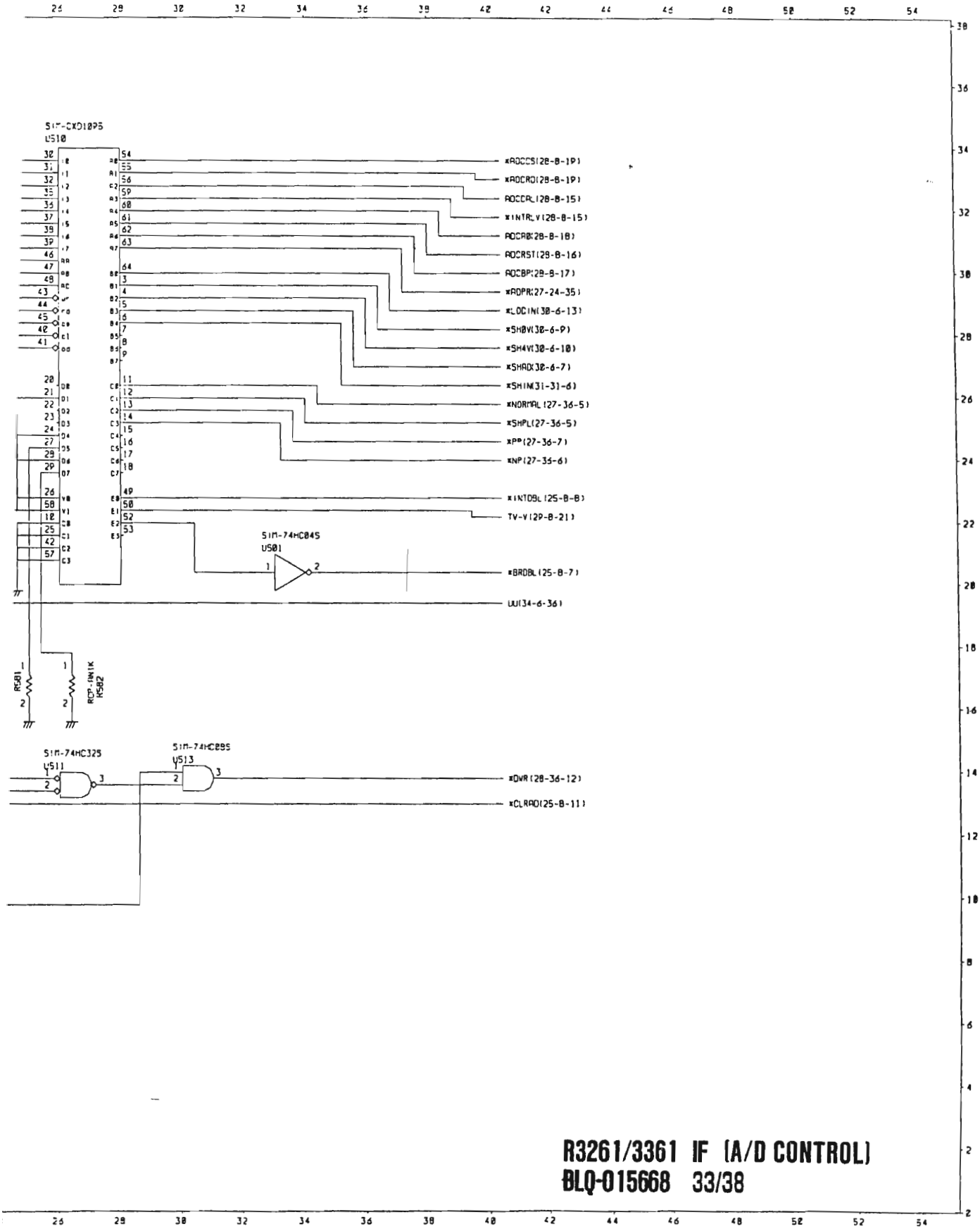

R3261/3361 IF (A/D CONTROL)
BLQ-015668 33/38

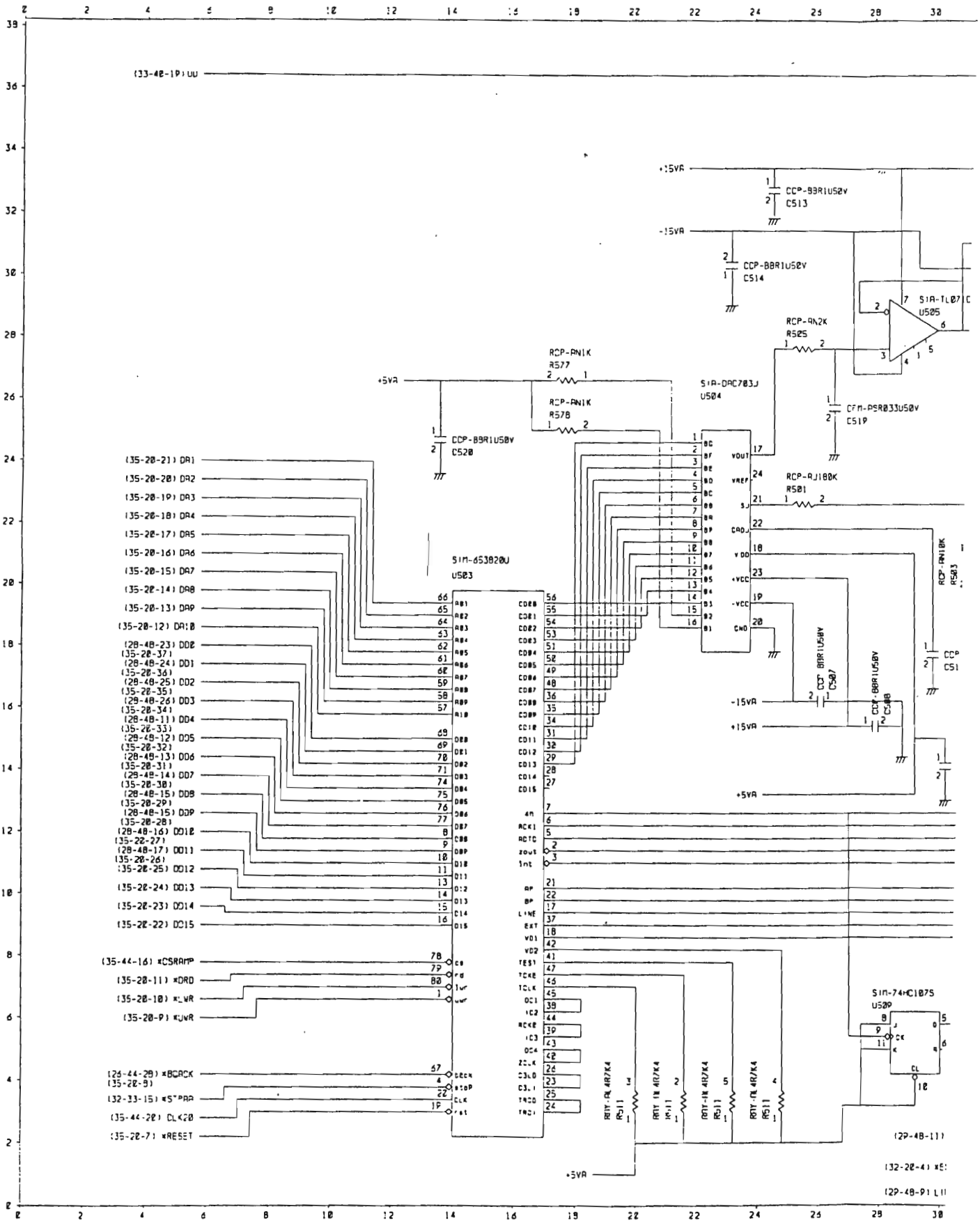
(33-40-19) UU
+15VA
CCP-B8R1U50V
C513
-15VA
CCP-B8R1U50V
C514
S1A-TL07
U505
RCP-RN2K
R505
RCP-RN1K
R577
RCP-RN1K
R578
+5VA
S1A-DAC703J
U504
CFM-PSR033U50V
C519
CCP-B8R1U50V
C520
RCP-RJ180K
R501
RCP-RN10K
R503
S1M-653820U
U503
CCP-B8R1U50V
C507
CCP-B8R1U50V
C508
S1M-74HC107S
U509
(35-20-21) DA1
(35-20-20) DA2
(35-20-19) DA3
(35-20-18) DA4
(35-20-17) DA5
(35-20-16) DA6
(35-20-15) DA7
(35-20-14) DA8
(35-20-13) DA9
(35-20-12) DA10
(28-48-23) DD0
(35-20-37)
(28-48-24) DD1
(35-20-36)
(28-48-25) DD2
(35-20-35)
(29-48-26) DD3
(35-20-34)
(28-48-11) DD4
(35-20-33)
(28-48-12) DD5
(35-20-32)
(28-48-13) DD6
(35-20-31)
(29-48-14) DD7
(35-20-30)
(28-48-15) DD8
(35-20-29)
(28-48-15) DD9
(35-20-28)
(28-48-16) DD10
(35-20-27)
(28-48-17) DD11
(35-20-26)
(35-20-25) DD12
(35-20-24) DD13
(35-20-23) DD14
(35-20-22) DD15
(35-44-16) *CSRAMP
(35-20-11) *DRD
(35-20-10) *LWR
(35-20-9) *UWR
(28-44-29) *BCACK
(35-20-8)
(32-33-15) *STPRA
(35-44-20) CLK20
(35-20-7) *RESET
(29-48-11)
(32-20-4) *E
(29-48-9) L

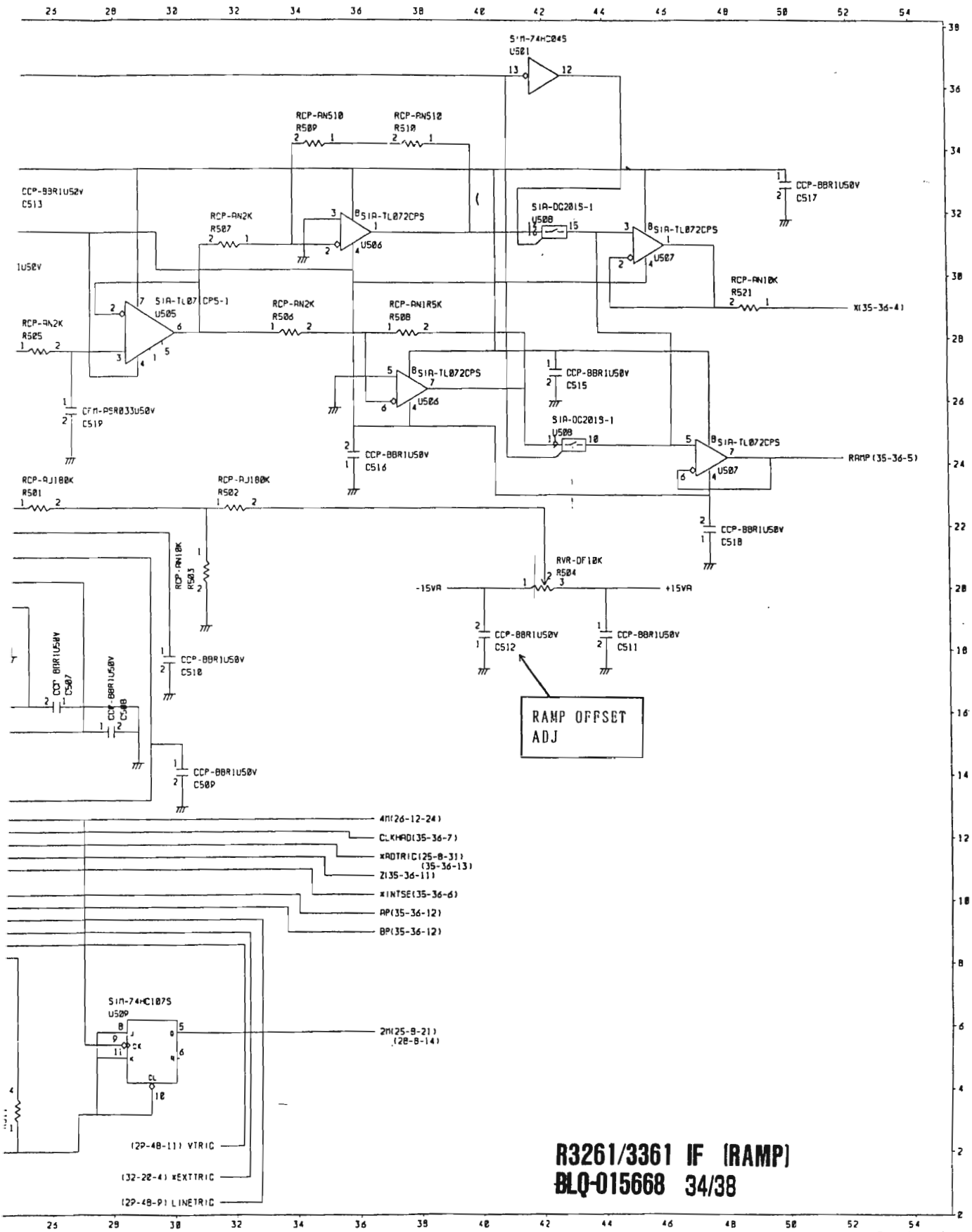

R3261/3361 IF (RAMP)
BLQ-015668 34/38

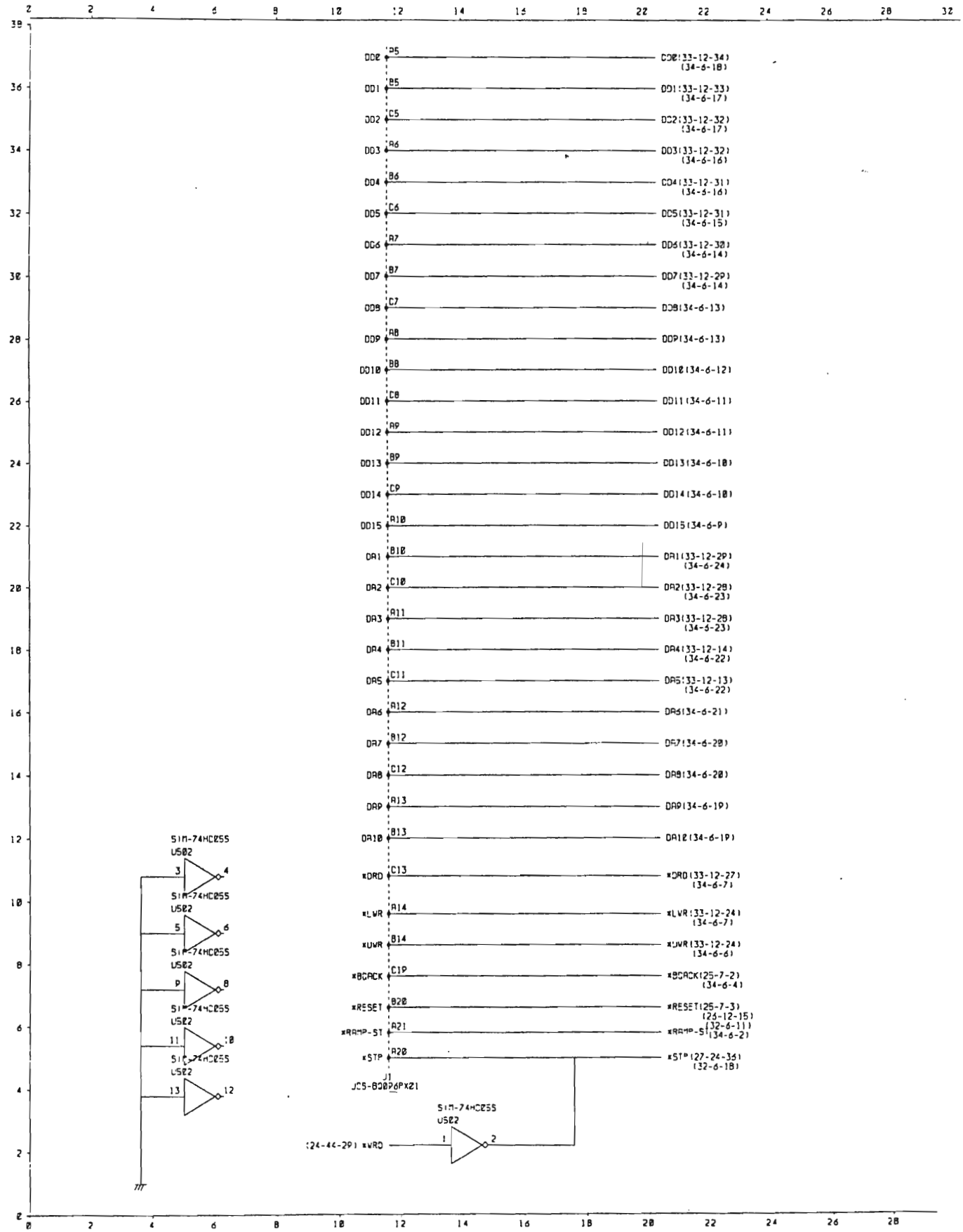
DD0 A5 DD0(33-12-34) (34-6-18)
DD1 B5 DD1(33-12-33) (34-6-17)
DD2 C5 DD2(33-12-32) (34-6-17)
DD3 A6 DD3(33-12-32) (34-6-16)
DD4 B6 DD4(33-12-31) (34-6-16)
DD5 C6 DD5(33-12-31) (34-6-15)
DD6 A7 DD6(33-12-30) (34-6-14)
DD7 B7 DD7(33-12-29) (34-6-14)
DD8 C7 DD8(34-6-13)
DD9 A8 DD9(34-6-13)
DD10 B8 DD10(34-6-12)
DD11 C8 DD11(34-6-11)
DD12 A9 DD12(34-6-11)
DD13 B9 DD13(34-6-10)
DD14 C9 DD14(34-6-10)
DD15 A10 DD15(34-6-9)
DA1 B10 DA1(33-12-29) (34-6-24)
DA2 C10 DA2(33-12-28) (34-6-23)
DA3 A11 DA3(33-12-28) (34-6-23)
DA4 B11 DA4(33-12-14) (34-6-22)
DA5 C11 DA5(33-12-13) (34-6-22)
DA6 A12 DA6(34-6-21)
DA7 B12 DA7(34-6-20)
DA8 C12 DA8(34-6-20)
DA9 A13 DA9(34-6-19)
DA10 B13 DA10(34-6-19)
*DRD C13 *DRD(33-12-27) (34-6-7)
*LWR A14 *LWR(33-12-24) (34-6-7)
*UWR B14 *UWR(33-12-24) (34-6-6)
*BGACK C19 *BGACK(25-7-2) (34-6-4)
*RESET B20 *RESET(25-7-3) (26-12-15)
*RAMP-ST A21 *RAMP-ST(32-6-11) (34-6-2)
*STP A20 *STP(27-24-36) (32-6-18)
J1
JCS-B20P6PX21
SIM-74HC255
U502
3 4
5 6
9 8
11 10
13 12
(24-44-29) *WRD
1 2

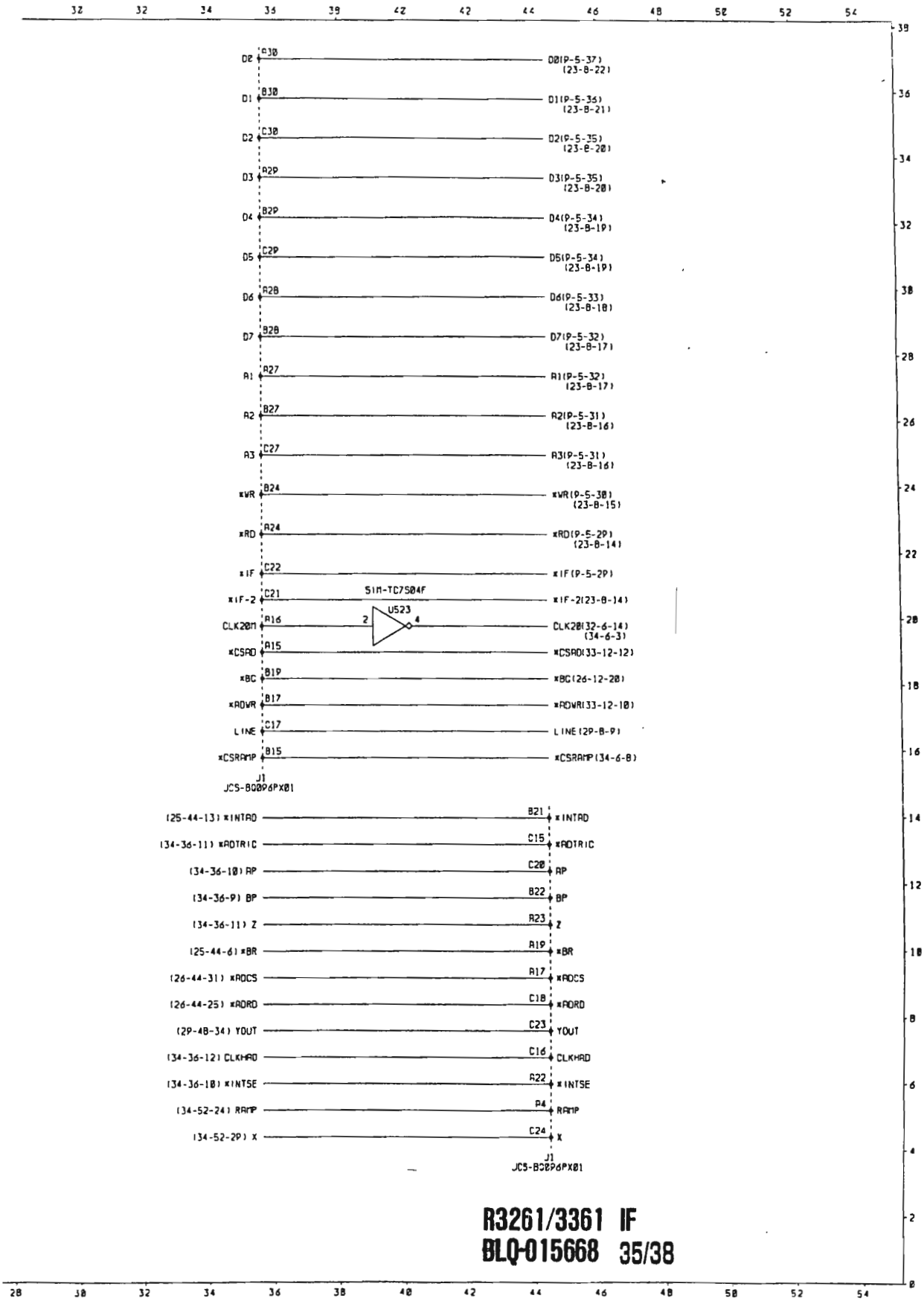

R3261/3361 IF
BLQ-015668 35/38

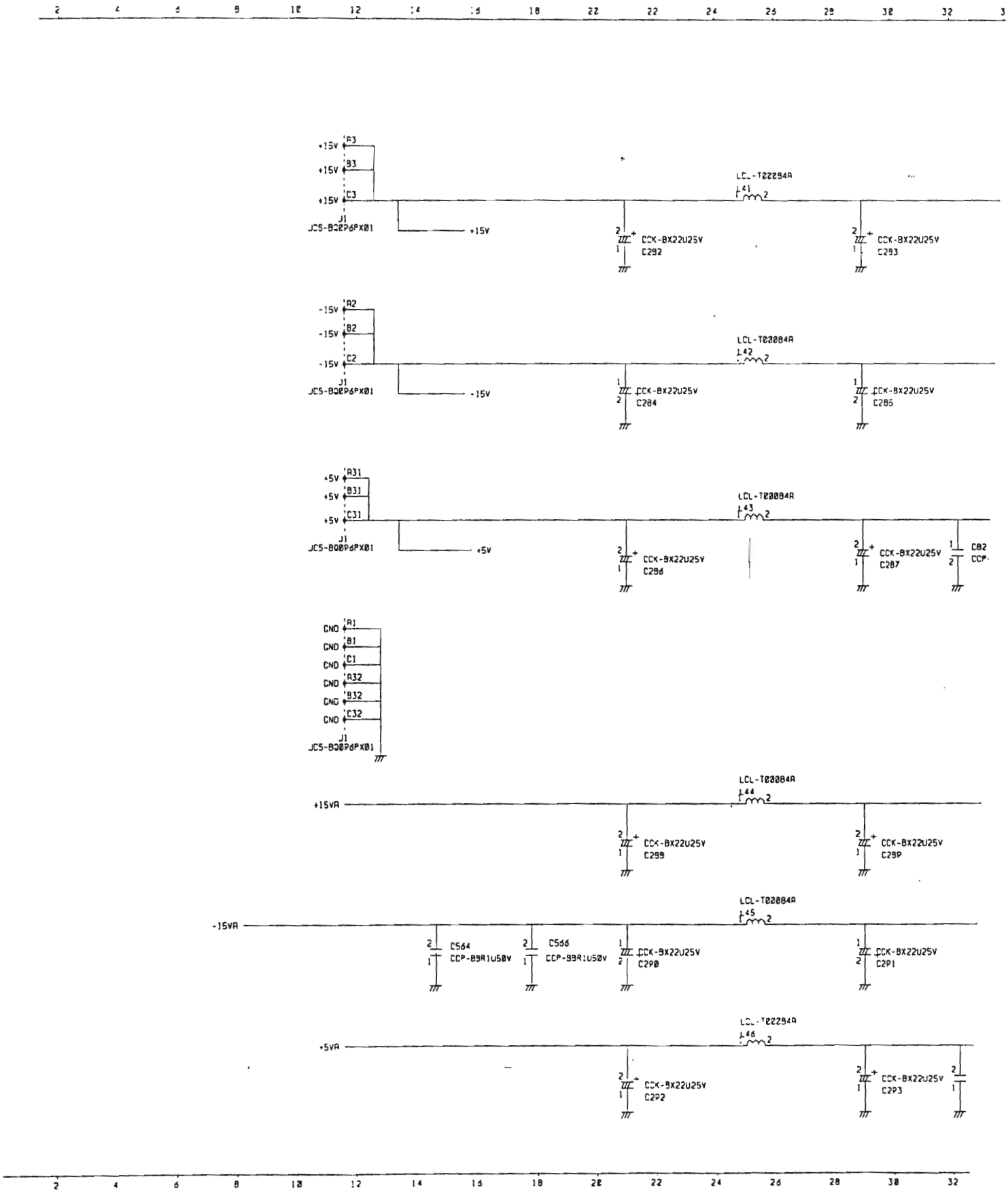
+15V
A3
B3
C3
J1
JCS-B02P6PX01
+15V
LCL-T22284A
L41
CCK-BX22U25V
C292
CCK-BX22U25V
C293
-15V
A2
B2
C2
J1
JCS-B02P6PX01
-15V
LCL-T20084A
L42
CCK-BX22U25V
C284
CCK-BX22U25V
C285
+5V
A31
B31
C31
J1
JCS-B00P6PX01
+5V
LCL-T20084A
L43
CCK-BX22U25V
C286
CCK-BX22U25V
C287
C82
CCP
GND
A1
B1
C1
A32
B32
C32
J1
JCS-B00P6PX01
+15VA
LCL-T20084A
L44
CCK-BX22U25V
C299
CCK-BX22U25V
C29P
-15VA
LCL-T20084A
L45
C564
CCP-B9R1U50V
C566
CCP-B9R1U50V
CCK-BX22U25V
C290
CCK-BX22U25V
C291
+5VA
L46
CCK-BX22U25V
C292
CCK-BX22U25V
C293

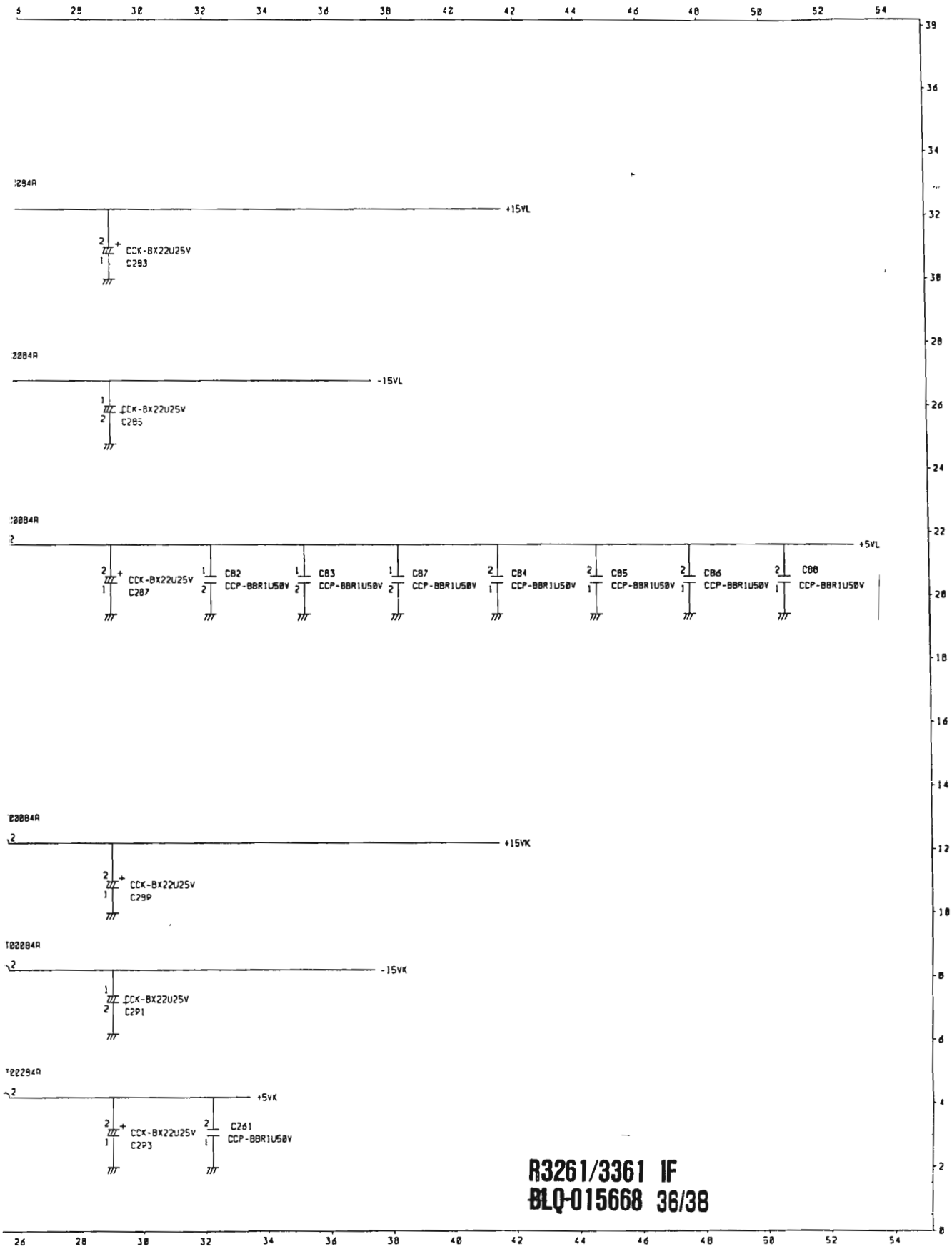

R3261/3361 IF
BLQ-015668 36/38

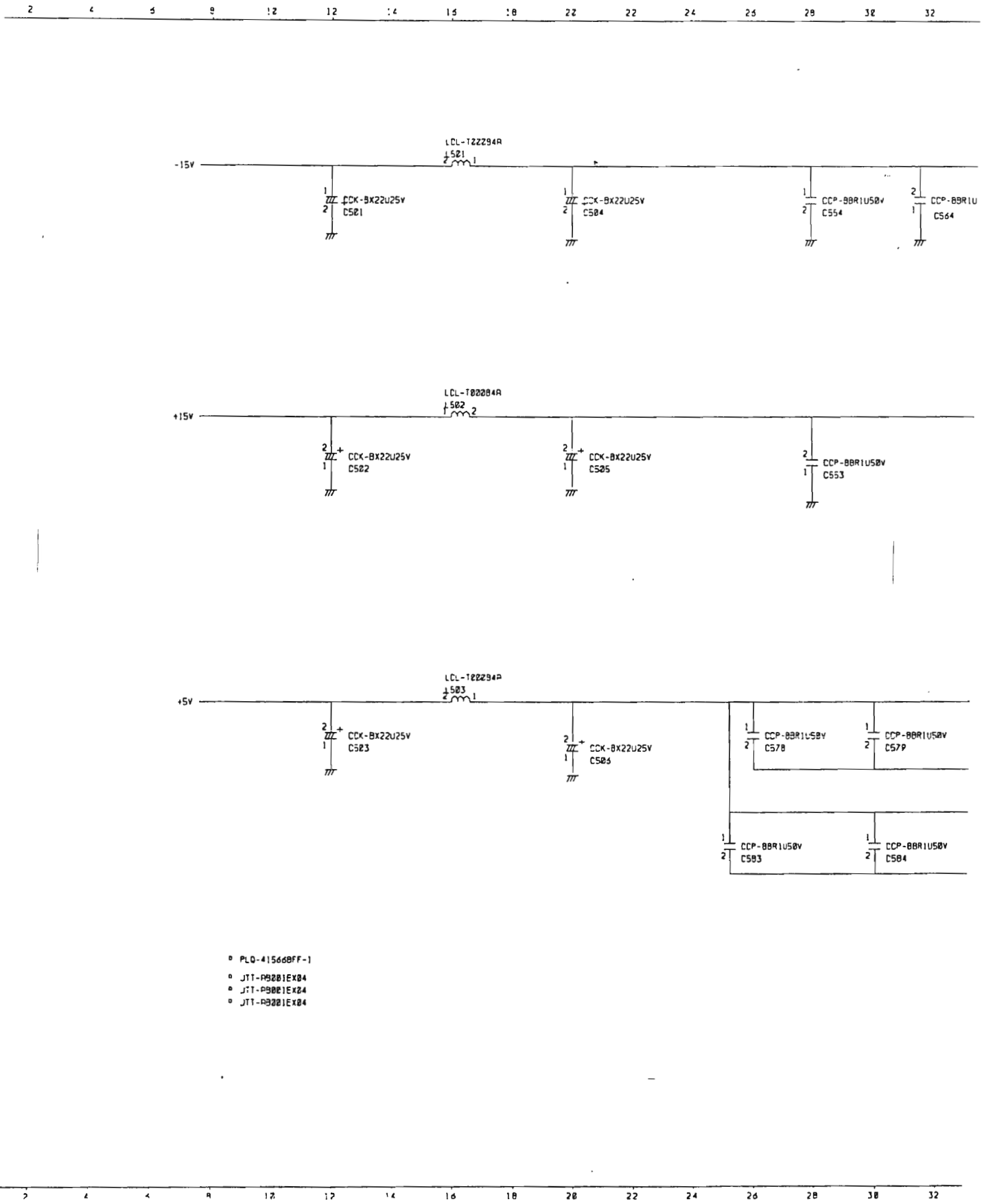
-15V
LCL-T22294A
L521
CCK-BX22U25V
C521
CCK-BX22U25V
C504
CCP-BBR1U50V
C554
CCP-BBR1U
C564
+15V
LCL-T00084A
L502
CCK-BX22U25V
C502
CCK-BX22U25V
C505
CCP-BBR1U50V
C553
+5V
LCL-T22294A
L503
CCK-BX22U25V
C503
CCK-BX22U25V
C506
CCP-BBR1U50V
C578
CCP-BBR1U50V
C579
CCP-BBR1U50V
C583
CCP-BBR1U50V
C584
PLQ-41566BFF-1
JTT-A9201EX04
JTT-A9201EX04
JTT-A9201EX04

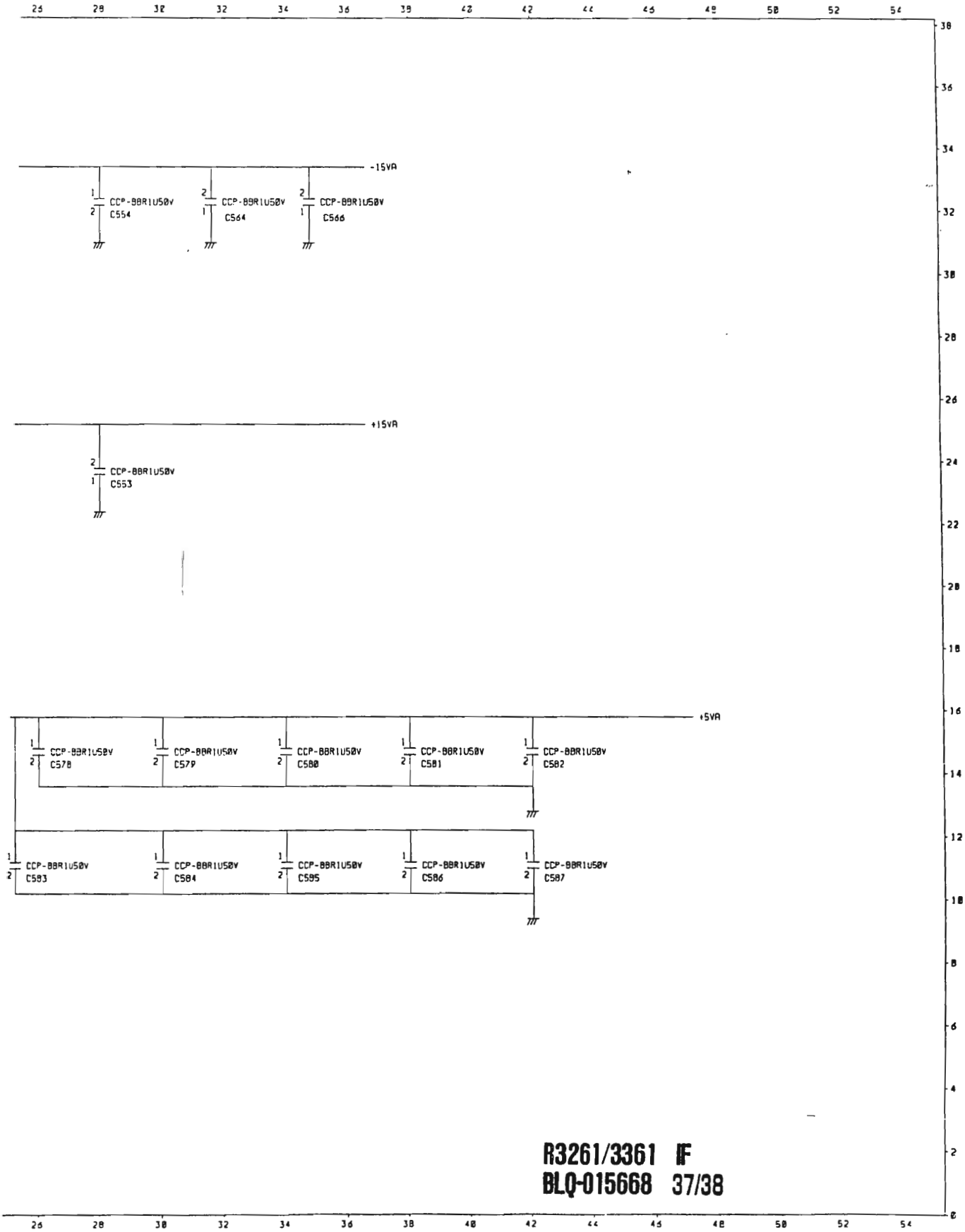

R3261/3361 IF
BLQ-015668 37/38

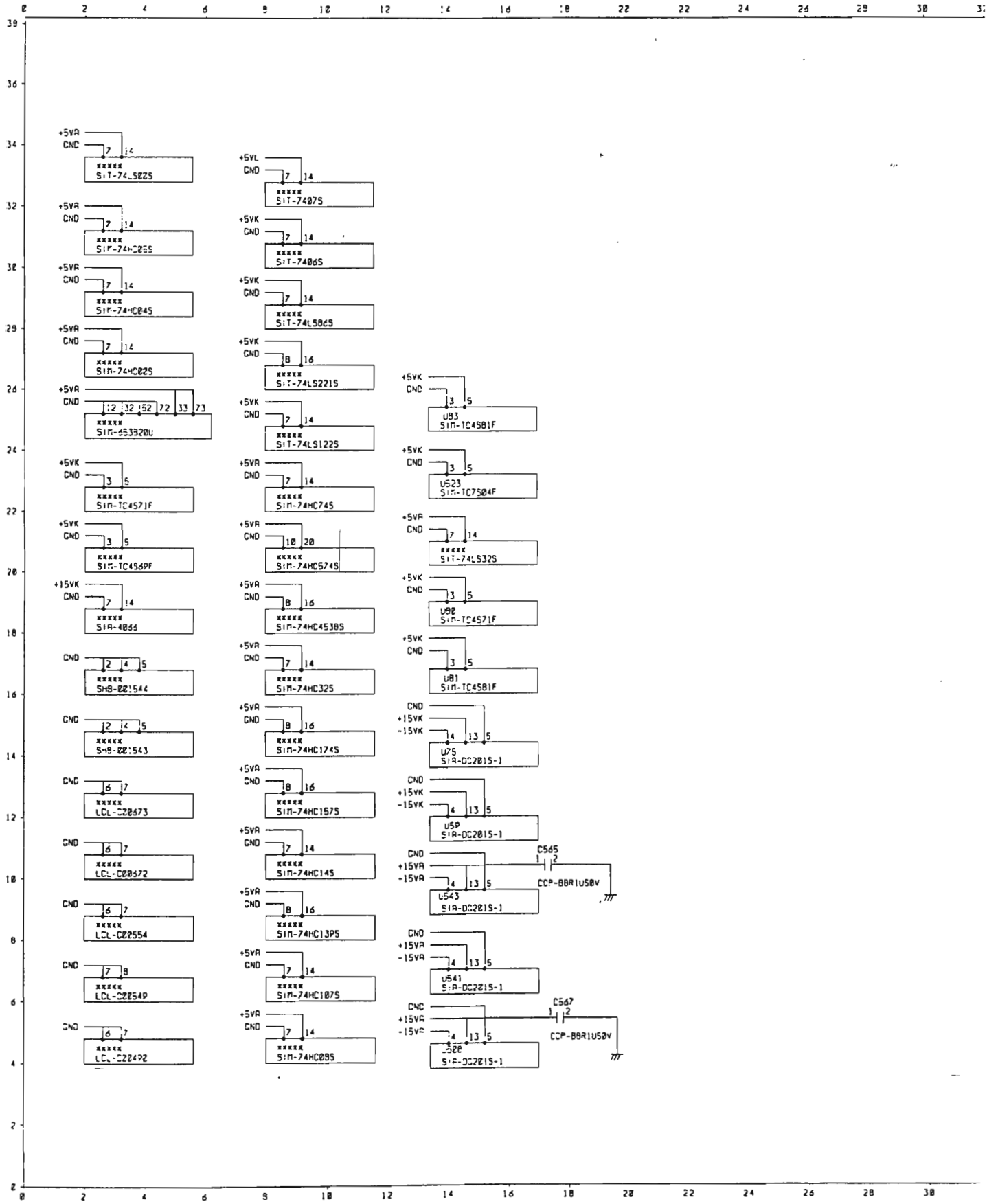
+5VA
GND
SIT-74LS02S
+5VA
GND
SIT-74HC25S
+5VA
GND
SIT-74HC04S
+5VA
GND
SIT-74HC02S
+5VA
GND
SIM-653320U
+5VK
GND
SIM-TC4571F
+5VK
GND
SIM-TC4569F
+15VK
GND
SIA-4066
GND
SHB-02:544
GND
SHB-02:543
GND
LCL-C20673
GND
LCL-C20672
GND
LCL-C20554
GND
LCL-C20549
GND
LCL-C20492
+5VL
GND
SIT-74075
+5VK
GND
SIT-74065
+5VK
GND
SIT-74LS86S
+5VK
GND
SIT-74LS221S
+5VK
GND
SIT-74LS122S
+5VA
GND
SIM-74HC74S
+5VA
GND
SIM-74HC574S
+5VA
GND
SIM-74HC4538S
+5VA
GND
SIM-74HC32S
+5VA
GND
SIM-74HC174S
+5VA
GND
SIM-74HC157S
+5VA
GND
SIM-74HC14S
+5VA
GND
SIM-74HC139S
+5VA
GND
SIM-74HC107S
+5VA
GND
SIM-74HC08S
+5VK
GND
U83
SIM-TC4581F
+5VK
GND
U523
SIM-TC7S04F
+5VA
GND
SIT-74LS32S
+5VK
GND
U80
SIM-TC4571F
+5VK
GND
U81
SIM-TC4581F
GND
+15VK
-15VK
U75
SIA-DC201S-1
GND
+15VK
-15VK
U5P
SIA-DC201S-1
GND
+15VA
-15VA
U543
SIA-DC201S-1
C565
CCP-BBR1U50V
GND
+15VA
-15VA
U541
SIA-DC201S-1
GND
+15VA
-15VA
U528
SIA-DC201S-1
C567
CCP-BBR1U50V

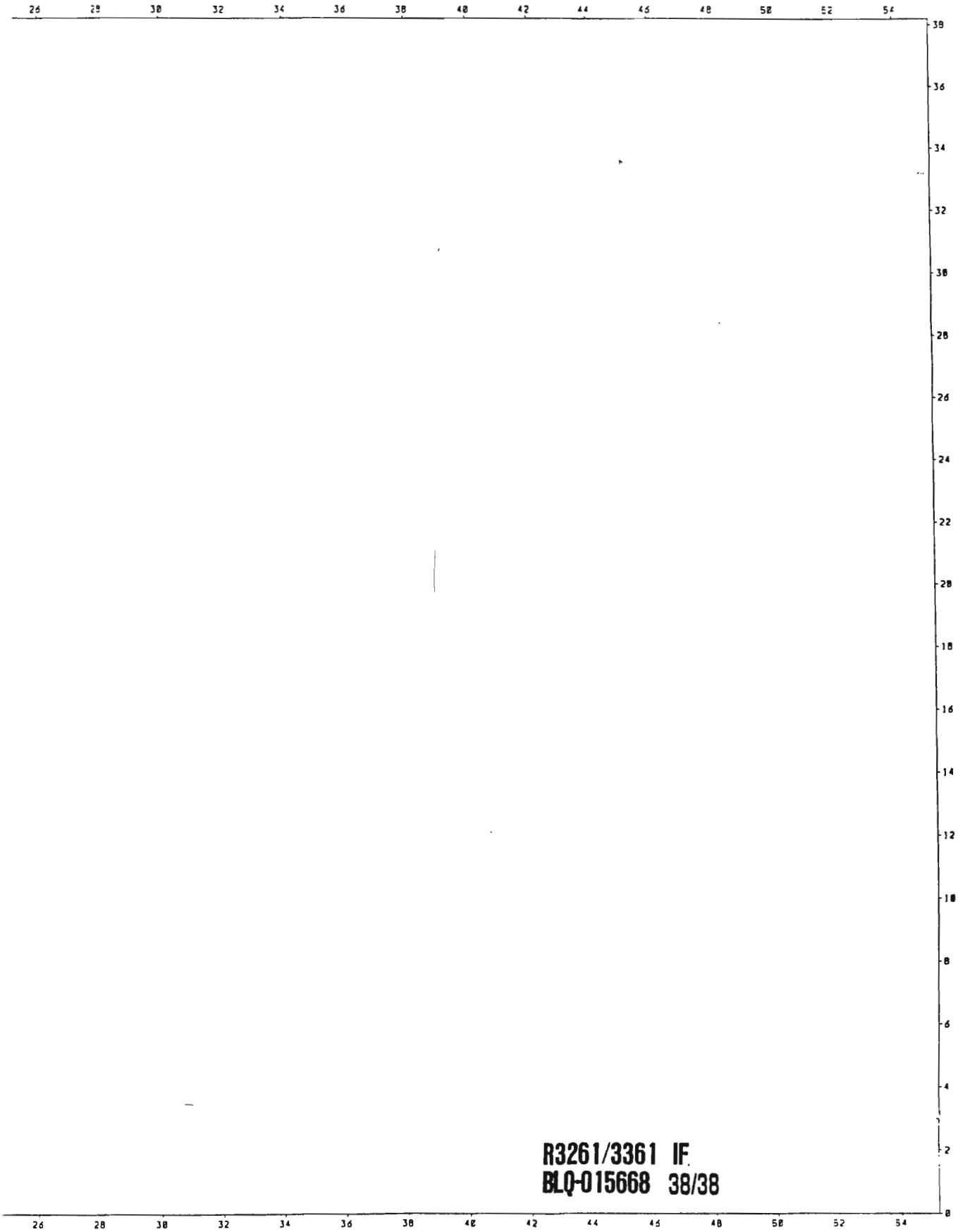

R3261/3361 IF
BLQ-015668 38/38

R3261/3361
CPU
BLQ-015669 (1/4)

Parts No.	Advantest Stock No.	Description					Note
C1	CCK-CM100U25V	FXD	ELECT	100μF	±20%	25V	
C4	CCK-CM100U16V	FXD	ELECT	100μF	±20%	16V	
C5	CCK-BY1000U10V	FXD	ELECT	1000μF	±20%	10V	
C6	CCK-CM100U16V	FXD	ELECT	100μF	±20%	16V	
C9	CCK-BX470U16V	FXD	ELECT	470μF	±20%	16V	
C12	CTA-AC3R3U16V	FXD	TA	3.3μF	±20%	16V	
C17	CTA-AC10U16V	FXD	TA	10μF	±20%	16V	
C18	CSM-BA470P50V	FXD	CER	470PF	±10%	50V	
C19	CSM-AY1000P50V	FXD	CER	1000PF	±10%	50V	
C21	CSM-AGR1U50V	FXD	CER	33PF	±10%	50V	
C28	CSM-AGR1U50V	FXD	CER	0.1μF	±10%	50V	
C61	CSM-AGR1U50V	FXD	CER	0.1μF	±10%	50V	
D1	SDS-1SS270	DIODE SI					
D5	SDS-1SS270	DIODE SI					
D7	SDS-1SS270	DIODE SI					
J1	JCS-BQ128PX01	ZENER DIODE					
J2	JCR-AF026PX02	CONNECTOR					
J3	JCR-AF030PX02	CONNECTOR					
J5	JCF-AC001JX01	CONNECTOR					
L1	LCL-C00010	COIL		180μH	±10%		
L2	LCL-T00084A	COIL		CUSTOM DEVICE			
Q1	STN-2SC1815	TRANSISTOR		NPN			
Q2	STN-2SC1815	TRANSISTOR		NPN			
Q3	STN-2SC1815	TRANSISTOR		NPN			
Q4	STN-2SC1815	TRANSISTOR		NPN			
Q5	STP-2SA1015	TRANSISTOR		PNP			
Q6	STN-2SC2901	TRANSISTOR		NPN			
Q8	STP-UN4114	TRANSISTOR		PNP			
R1	RAY-TL3R9K8	FXD	RA	3.9kΩ×8	±5%	1/8W	
R16	RAY-RL1K6	FXD	RA	1kΩ×6	±5%	1/8W	
R18	RAY-TL33K4	FXD	RA	33kΩ×4	±5%	1/8W	
R24	RCB-AH1R2K	FXD	CAR	1.2kΩ	±5%	1/4W	
R25	RCB-AG6R8K	FXD	CAR	6.8kΩ	±5%	1/8W	
R27	RCB-AG68	FXD	CAR	68Ω	±5%	1/8W	
R28	RCB-AG1R5K	FXD	CAR	1.5kΩ	±5%	1/8W	
R29	RCB-AG220	FXD	CAR	220Ω	±5%	1/8W	
R30	RCB-AG3R3K	FXD	CAR	3.3kΩ	±5%	1/8W	
R31	RCB-AG820	FXD	CAR	820Ω	±5%	1/8W	
R32	RCB-AG10K	FXD	CAR	10kΩ	±5%	1/8W	
R33	RCB-AG390	FXD	CAR	390Ω	±5%	1/8W	

R3261/3361
CPU
BLQ-015669 (2/4)

Parts No.	Advantest Stock No.	Description					Note
R34	RCB-AG2R2K	FXD	CAR	2.2kΩ	±5%	1/8W	
R37	RCB-AG2R2K	FXD	CAR	2.2kΩ	±5%	1/8W	
R39	RCB-AG560	FXD	CAR	560Ω	±5%	1/8W	
R40	RCB-AG120	FXD	CAR	120Ω	±5%	1/8W	
R41	RCB-AG220	FXD	CAR	220Ω	±5%	1/8W	
R42	RCB-AG680	FXD	CAR	680Ω	±5%	1/8W	
R43	RCB-AG3R3K	FXD	CAR	3.3kΩ	±5%	1/8W	
R44	RCB-AG100	FXD	CAR	100Ω	±5%	1/8W	
R45	RCB-AG470	FXD	CAR	470Ω	±5%	1/8W	
R46	RCB-AG220	FXD	CAR	220Ω	±5%	1/8W	
R48	RCB-AG680	FXD	CAR	680Ω	±5%	1/8W	
R49	RCB-AG220	FXD	CAR	220Ω	±5%	1/8W	
R50	RCB-AG330	FXD	CAR	330Ω	±5%	1/8W	
R51	RCB-AG6R8K	FXD	CAR	6.8kΩ	±5%	1/8W	
R52	RCB-AG1R5K	FXD	CAR	1.5kΩ	±5%	1/8W	
R54	RCB-AG820	FXD	CAR	820Ω	±5%	1/8W	
R56	RCB-AG10K	FXD	CAR	10kΩ	±5%	1/8W	
R57	RCB-AG82K	FXD	CAR	82kΩ	±5%	1/8W	
R58	RCB-AG10K	FXD	CAR	10kΩ	±5%	1/8W	
R59	RCB-AG470	FXD	CAR	470Ω	±5%	1/8W	
R60	RCB-AG1K	FXD	CAR	1kΩ	±5%	1/8W	
R61	RCB-AG10K	FXD	CAR	10kΩ	±5%	1/8W	
R62	RCB-AG330	FXD	CAR	330Ω	±5%	1/8W	
R65	RVR-AK2K	VAR		2kΩ	±20%	1/2W	
TP1	JTE-AH001JX01						
U1	SIM-74HC4538S	MONOSTABLE MULTIVIBRATORS WITH CLEAR					
U2	SIM-74HC74S	DUAL-D FLIP-FLOPS WITH PRESET & CLEAR					
U4	SIM-74HC245S	OCTAL BUS TRANCEIVERS					
U8	SIM-74HC244S	OCTAL BUFFERS					
U9	SIM-74HC32S	QUAD 2-INPUT POSI-OR GATES					
U10	SIM-74HC08S	QUAD 2-INPUT POSI-AND GATES					
U12	SIM-74HC273S	OCTAL D-TYPE FLIP-FLOPS					
U13	SIM-74HC367S	HEX BUS DRIVERS					
U16	SIM-74HC245S	OCTAL BUS TRANCEIVERS					
U18	SIM-74HC08S	QUAD 2-INPUT POSI-AND GATES					
U19	SIM-74HC74S	DUAL-D FLIP-FLOPS WITH PRESET & CLEAR					
U20	SIM-74HC139S	DUAL 2 TO 4-LINE DECORDERS					
U21	SIM-74HC161S	SYNCHRONOUS 4-BIT BINARY COUNTERS					
U22	SIM-74HC148S	8-LINE TO 3-LINE OCTAL PRIORITY ENCODERS					
U23	SIM-74HC04S	HEX INVERTERS					

R3261/3361
CPU
BLQ-015669 (3/4)

Parts No.	Advantest Stock No.	Description	Note
U24	SIM-74HC374S	OCTAL D-FLIP-FLOPS	
U25	SIM-74HC390S	DUAL DECADE COUNTERS	
U27	SIM-74HC166S	8-BIT SHIFT REGISTERS	
U28	SIM-74HC166S	8-BIT SHIFT REGISTERS	
U30	SIM-74HC04S	HEX INVERTERS	
U31	SIM-74HC32S	QUAD 2-INPUT POSI-OR GATES	
U32	SIM-74HC20S	DUAL 4-INPUT POSI-NAND GATES	
U33	SIM-74HC367S	HEX BUS DRIVERS	
U34	SIM-74HC138S	3 TO 8-LINE DECODERS	
U35	SIT-74F244S	OCTAL BUFFERS	
U36	SIT-74F175S	QUAD D-FLIP-FLOPS	
U37	SMM-4461A	65536-WORD×4-BIT VIDEO RAM	
U41	SIT-74AS74S	DUAL D FLIP FLOPS,WITH PRESET & CLAER	
U42	SIM-74HC390S	DUAL DECADE COUNTERS	
U43	SIM-74HC74S	DUAL D FLIP FLOPS WITH PRESET & CLAER	
U45	SIM-74HC08S	QUAD Z-INPUT DOSK-AND GATES	
U46	SMM-658128LP12	131072-WORD×8Bit PSEUDO STATIC RAM	
U47	SIM-74HC393S	DUAL 4-BIT BINARY COUNTERS	
U48	SIM-74HC86S	QUAD 2-INPUT EXCLUSIVE OR GATES	
U49	SIM-74HC74S	DUAL D FLIP-FLOPS WITH PRESET & CLAER	
U50	SIM-74HC04S	HEX INVERTERS	
U51	SIM-74HC138S	3 TO 8-LINE DECODERS	
U52	SIM-95C60*16KC	GRAPHIC CONTROLLER	
U53	SIM-74HC166S	8-BIT SHIFT REGISTERS	
U54	SIM-74HC166S	8-BIT SHIFT REGISTERS	
U56	SMM-4461A	65536-WORD×4-BIT VIDEO RAM	
U60	SIM-74HC74S	DUAL D FLIP-FLOPS WITH PRESET & CLAER	
U61	SIM-74HC02S	QUAD 2-INPUT POSI-NOR GATES	
U62	SIT-74AS74S	DUAL D FLIP-FLOPS WITH PRESET & CLAER	
U63	SIM-74HC367S	HEX BUS DRIVERS	
U64	SIM-8254S	PROGRAMMABLE COUNTER/TIMER	
U65	SMM-658128LP12	131072-WORD×8Bit PSEUDO STATIC RAM	
U66	SIM-74HC04S	HEX INVERTERS	
U67	SIM-74HC164S	8-BIT PARALLEL OUTPUT SERIAL SHIFT REGISTERS	
U68	SIM-74HC32S	QUAD 2 INPUT POSI AND GATES	
U69	SIM-74HC30S	8-INPUT POSI NAND GATES	
U70	SIM-74HC08S	QUAD 2 INPUT POSI AND GATES	
U71	SIM-74HC107S	DUAL J·K FLIP-FLOPS WITH CLEAR	
U72	SIM-74HC04S	HEX INVERTERS	
U73	SIM-74HC00S	DUAL INPUT POSI-NAND GATES	

R3261/3361
CPU
BLQ-015669 (4/4)

Parts No.	Advantest Stock No.	Description	Note
U75	SIM-74HC08S	QUAD 2 INPUT POSI AND GATES	
U76	SIM-74HC74S	DUAL D FLIP-FLOPS WITH PRESET & CLEAR	
U77	SIM-74HC139S	DUAL 2 TO 4-LINE DECODERS	
U78	SIM-74HC107S	DUAL J·K FLIP-FLOPS WITH CLEAR	
U79	SIM-8254S	PROGRAMMABLE COUNTER/TIMER	
U80	SMM-27C1001A	131072-WORD×8BIT EPROM	
U81	SMM-28PC64*15-1	8k WORD×8BIT EEPROM	
U82	SIM-654815	DECODER & CLOCK GENERATOR	
U83	SIM-74HC32S	QUAD 2-INPUT POSI-OR GATES	
U84	SIM-74HC4538S	DUAL MONOSTABLE MULTIVIBRATORS WITH CLEAR	
U85	SMM-27C1001A	131072-WORD×8BIT EEPROM	
U86	SMM-28PC64*15-1	8k WORD×8BIT EEPROM	
U87	SIT-74F244S	OCTAL BUFFERS	
U89	SIM-74HC166S	8-BIT SHIFT REGISTERS	
U91	SMM-4461A	65536-WORD×4-BIT VIDEO RAM	
U95	SIM-74HC05S	HEX INVERTERS (OPEN ARRAY)	
U96	SIM-74HC14S	HEX SCHIMTT-TRIGGER INVERTERS	
U97	SIM-74HC273S	OCTAL D FLIP-FLOPS	
U98	SIM-61H06B23F	KEY CONTROLLER	
U99	SMM-27C1001A	131072-WORD×8BIT EPROM	
U100	SIM-68HC000C	16-BIT MICROPROCESSOR	
U101	SIM-9914	GP-4B CONTROLLER	
U102	SIM-74HC166S	8-BIT SHIFT REGISTERS	
U104	SIA-TL7700	VOLTAGE COMPARATER	
U106	SIT-74AS32S	QUAD 2-INPUT POSI-OR GATES	
U108	SMM-27C1001A	131072-WORD×8BIT EPROM	
U109	SIT-75160	OCTAL GP-AB TRANSCEIVERS	
U110	SIT-75161	OCTAL GP-AB TRANSCEIVERS	
U111	SMM-4461A	65536-WORD×4-BIT VIDEO RAM	
X1	DXC-001716	CRYSTAL OSC	

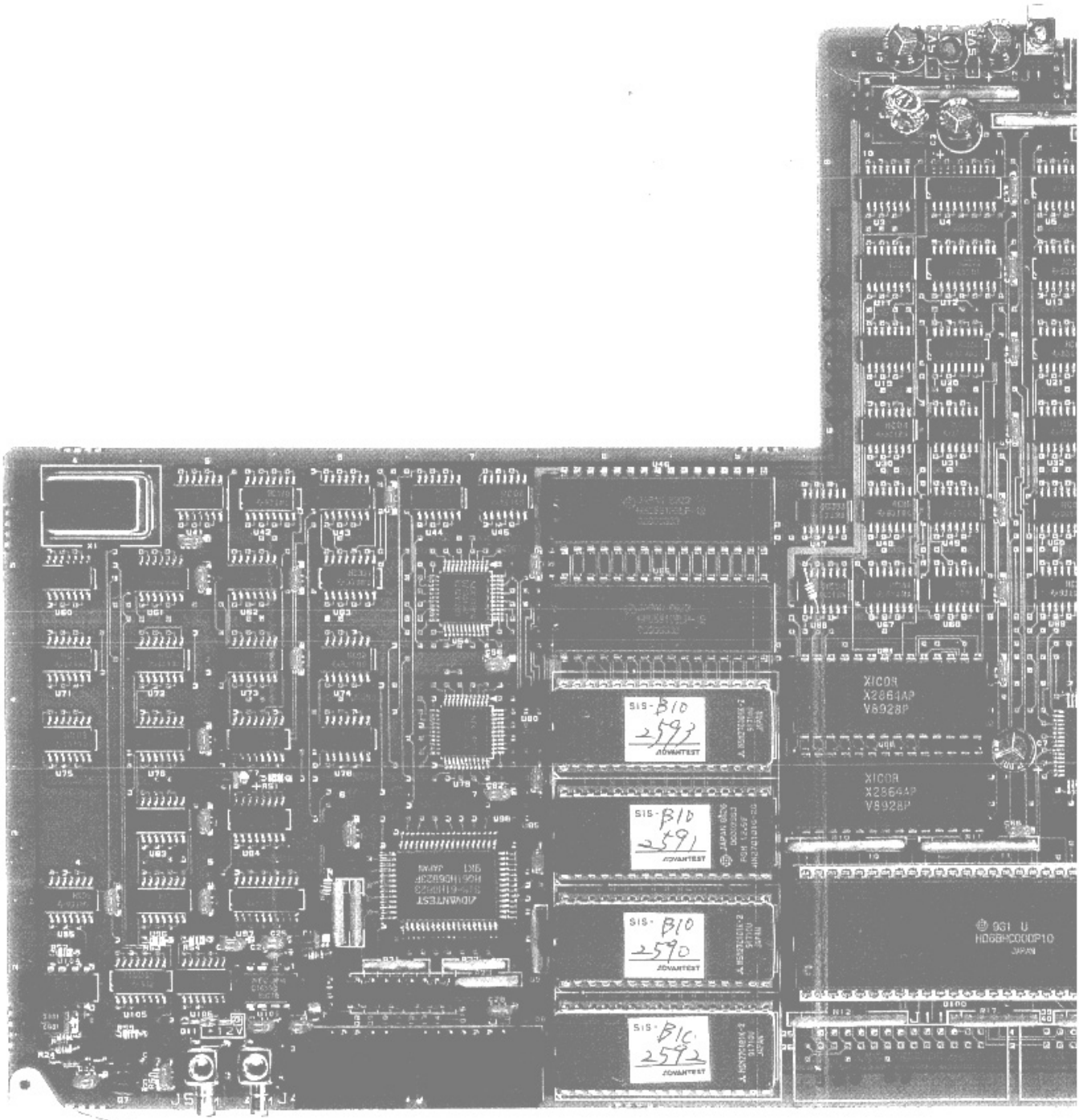
SIS-B10
2593
ADVANTEST
SIS-B10
2591
ADVANTEST
SIS-B10
2590
ADVANTEST
SIS-B10
2592
ADVANTEST
XICOR
X2864AP
V8928P
XICOR
X2864AP
V8928P
931 U
HD68HC000P10
JAPAN

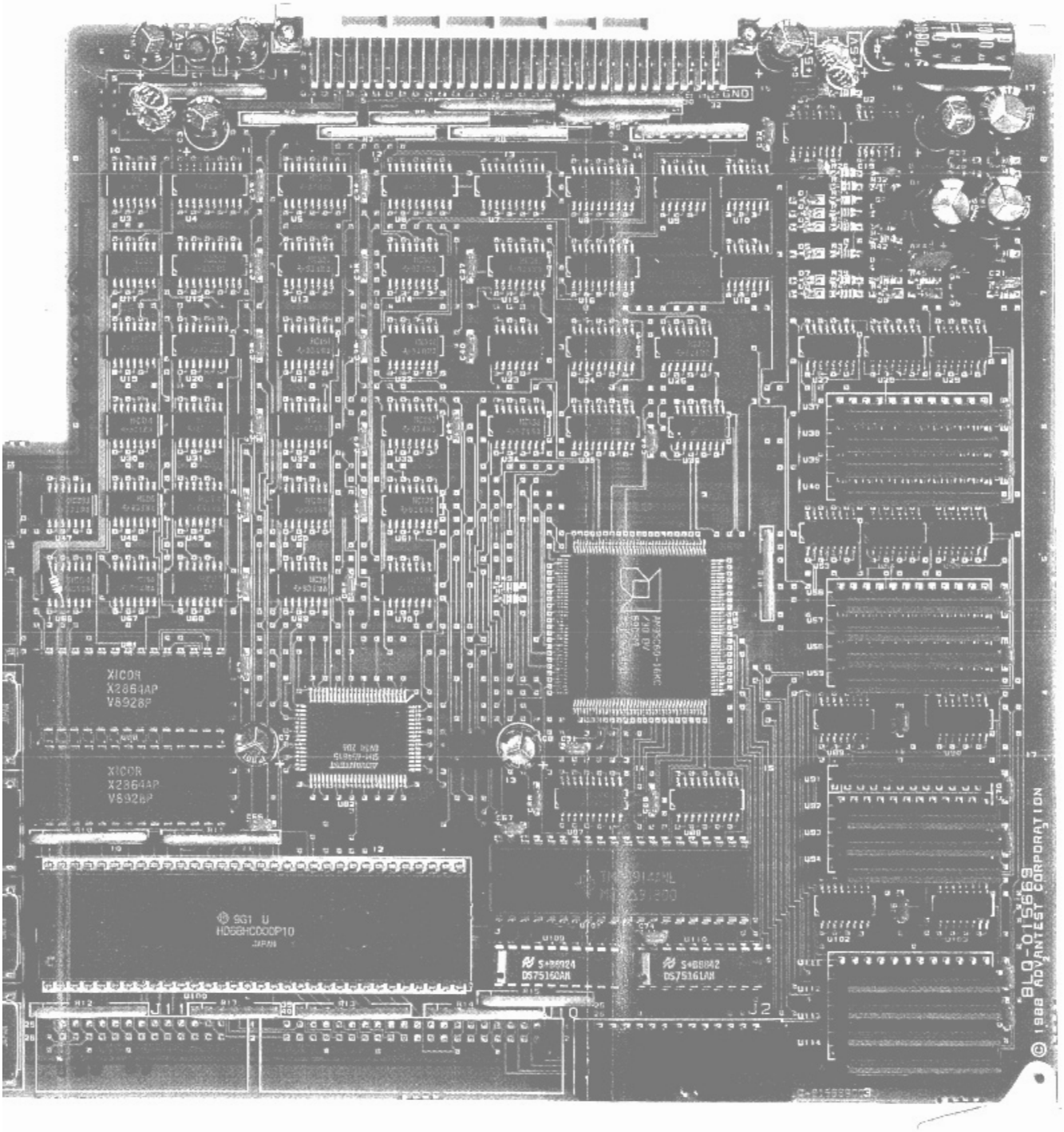

PARTS LOCATION
CPU
BLQ-015669

1. DIAGRAMS ILLUSTRATION

1-1 SYMBOLS REFERENCE DESIGNATORS

1) RESISTOR

(1) RAY-AL3R9K8

SYMBOL

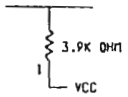

CIRCUIT

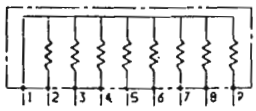

PART

2) IC PIN NAME (PIN-NAME OF NEGATI\
DISPLAYED BY SMALL

2) IC PIN NAME (PIN-NAME OF NEGATIVE LOGIC ARE DISPLAYED BY SMALL LETTER)

R3261/3361 CPU
BLQ-015669 1/33

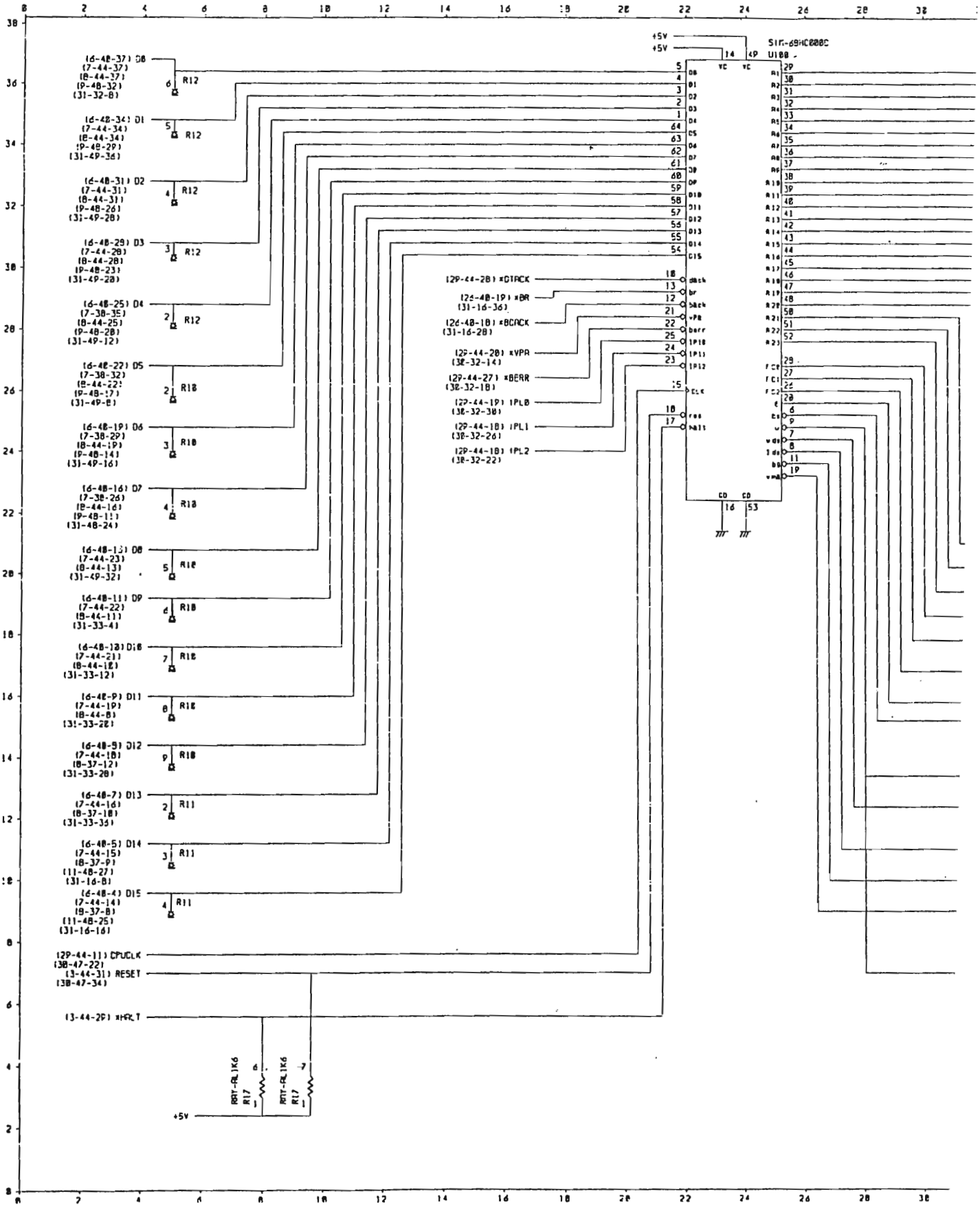
+5V
+5V
STK-68HC000C
U100
(16-48-37) D0
(7-44-37)
(8-44-37)
(9-48-32)
(31-32-8)
R12
(16-48-34) D1
(7-44-34)
(8-44-34)
(9-48-29)
(31-49-36)
R12
(16-48-31) D2
(7-44-31)
(8-44-31)
(9-48-26)
(31-49-28)
R12
(16-48-29) D3
(7-44-28)
(8-44-28)
(9-48-23)
(31-49-20)
R12
(16-48-25) D4
(7-38-35)
(8-44-25)
(9-48-20)
(31-49-12)
R12
(16-48-22) D5
(7-38-32)
(8-44-22)
(9-48-17)
(31-49-8)
R10
(16-48-19) D6
(7-38-29)
(8-44-19)
(9-48-14)
(31-49-16)
R10
(16-48-16) D7
(7-38-26)
(8-44-16)
(9-48-11)
(31-48-24)
R10
(16-48-13) D8
(7-44-23)
(8-44-13)
(31-49-32)
R10
(16-48-11) D9
(7-44-22)
(8-44-11)
(31-33-4)
R10
(16-48-10) D10
(7-44-21)
(8-44-10)
(31-33-12)
R10
(16-48-9) D11
(7-44-19)
(8-44-8)
(31-33-20)
R10
(16-48-8) D12
(7-44-18)
(8-37-12)
(31-33-28)
R10
(16-48-7) D13
(7-44-16)
(8-37-10)
(31-33-36)
R11
(16-48-5) D14
(7-44-15)
(8-37-9)
(11-48-27)
(31-16-8)
R11
(16-48-4) D15
(7-44-14)
(8-37-8)
(11-48-25)
(31-16-16)
R11
(29-44-11) CPUCLK
(30-47-22)
(3-44-31) RESET
(30-47-34)
(3-44-29) xHALT
(29-44-28) xDTACK
(26-48-19) xBR
(31-16-36)
(26-48-18) xBGACK
(31-16-28)
(29-44-20) xVPA
(30-32-14)
(29-44-27) xBERR
(30-32-18)
(29-44-19) IPL0
(30-32-30)
(29-44-18) IPL1
(30-32-26)
(29-44-18) IPL2
(30-32-22)
RNT-RL1K6
R17
RNT-RL1K6
R17
+5V

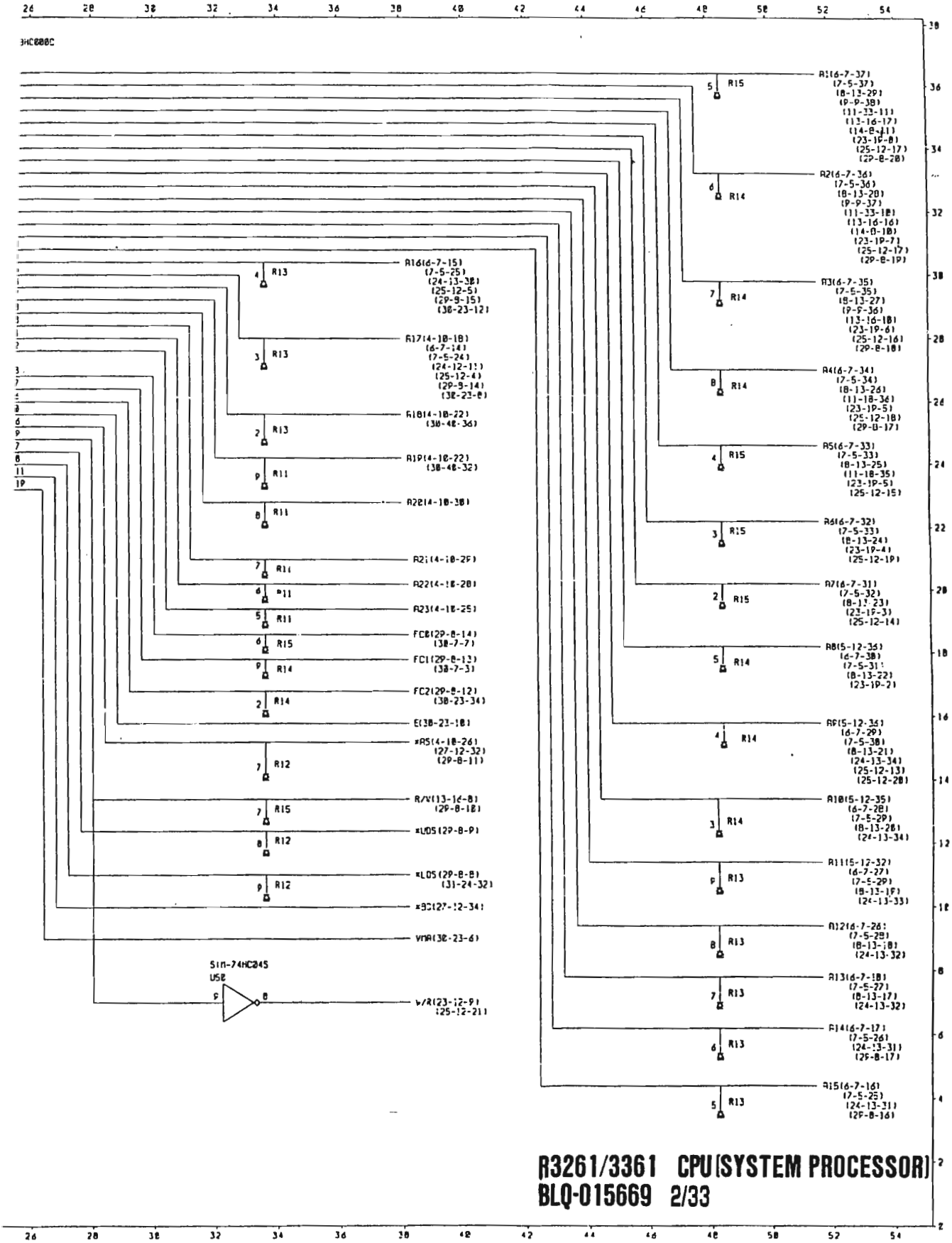
3HC000C
A1(6-7-37)
(7-5-37)
(8-13-29)
(9-9-38)
(11-33-11)
(13-16-17)
(14-8-11)
(23-19-8)
(25-12-17)
(29-8-28)
A2(6-7-36)
(7-5-36)
(8-13-28)
(9-9-37)
(11-33-18)
(13-16-16)
(14-8-10)
(23-19-7)
(25-12-17)
(29-8-19)
A3(6-7-35)
(7-5-35)
(8-13-27)
(9-9-36)
(13-16-18)
(23-19-6)
(25-12-16)
(29-8-18)
A4(6-7-34)
(7-5-34)
(8-13-26)
(11-18-36)
(23-19-5)
(25-12-18)
(29-8-17)
A5(6-7-33)
(7-5-33)
(8-13-25)
(11-18-35)
(23-19-5)
(25-12-15)
A6(6-7-32)
(7-5-33)
(8-13-24)
(23-19-4)
(25-12-19)
A7(6-7-31)
(7-5-32)
(8-13-23)
(23-19-3)
(25-12-14)
A8(5-12-36)
(6-7-38)
(7-5-31)
(8-13-22)
(23-19-2)
A9(5-12-36)
(6-7-29)
(7-5-38)
(8-13-21)
(24-13-34)
(25-12-13)
(25-12-28)
A10(5-12-35)
(6-7-28)
(7-5-29)
(8-13-26)
(24-13-34)
A11(5-12-32)
(6-7-27)
(7-5-29)
(8-13-19)
(24-13-33)
A12(6-7-26)
(7-5-28)
(8-13-18)
(24-13-32)
A13(6-7-18)
(7-5-27)
(8-13-17)
(24-13-32)
A14(6-7-17)
(7-5-26)
(24-13-31)
(29-8-17)
A15(6-7-16)
(7-5-25)
(24-13-31)
(29-8-16)
A16(6-7-15)
(7-5-25)
(24-13-30)
(25-12-5)
(29-9-15)
(30-23-12)
A17(4-10-18)
(6-7-14)
(7-5-24)
(24-12-11)
(25-12-4)
(29-9-14)
(30-23-8)
A18(4-10-22)
(30-40-36)
A19(4-10-22)
(30-40-32)
A20(4-10-30)
A21(4-10-29)
A22(4-10-28)
A23(4-10-25)
FC0(29-8-14)
(30-7-7)
FC1(29-8-13)
(30-7-3)
FC2(29-8-12)
(30-23-34)
E(30-23-10)
*RS(4-10-26)
(27-12-32)
(29-8-11)
R/W(13-16-8)
(29-8-10)
*LDS(29-8-9)
*LDS(29-8-8)
(31-24-32)
*BC(27-12-34)
VMA(30-23-6)
SN74HC04S
U50
R/W(23-12-9)
(25-12-21)
R3261/3361 CPU(SYSTEM PROCESSOR)
BLQ-015669 2/33

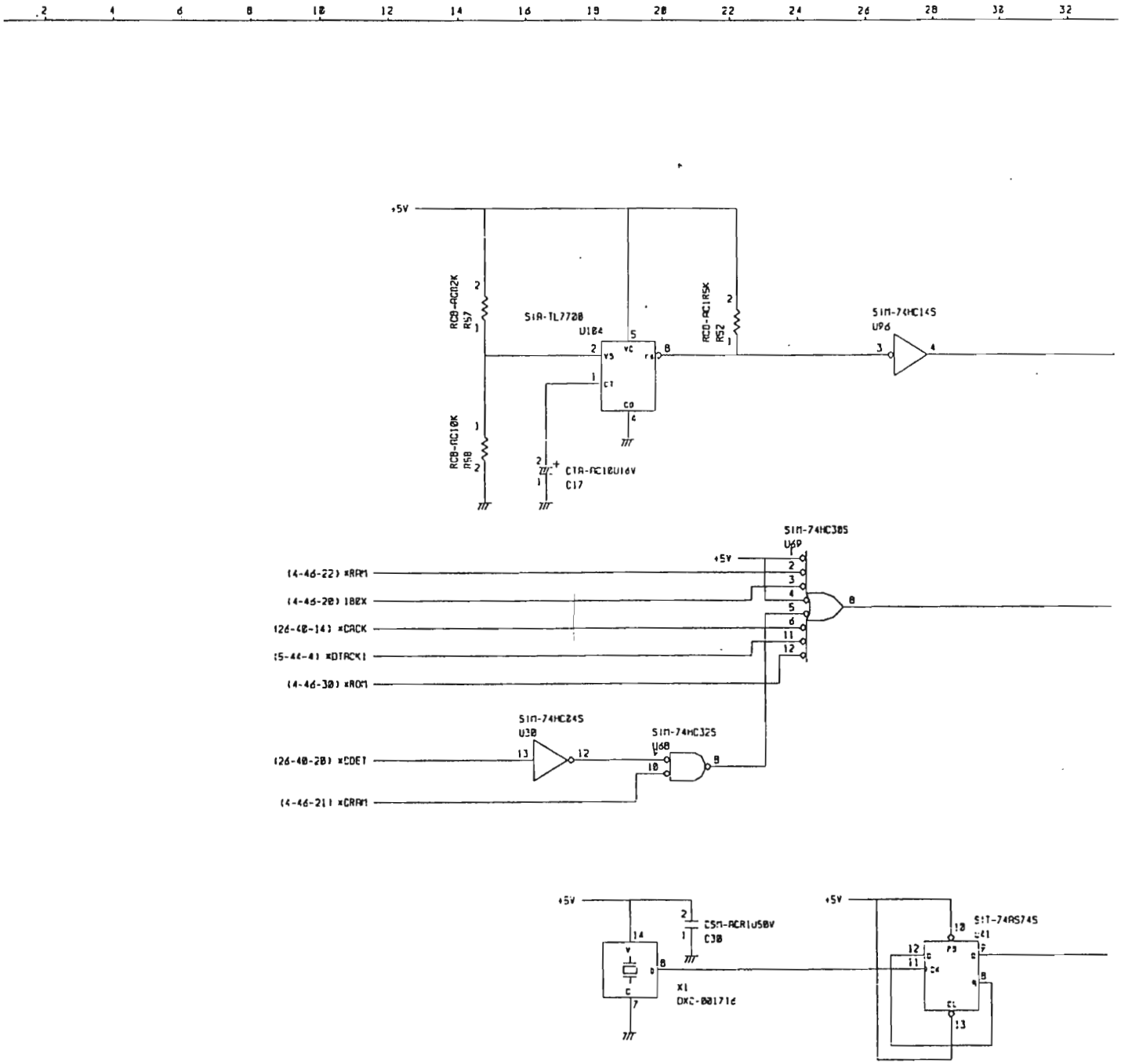
+5V
RCB-RC02K
R57
SIA-TL7720
U184
RCD-RC1R5K
R52
SIM-74HC14S
U96
RCB-RC10K
R58
CIA-RC10U16V
C17
SIM-74HC30S
U69
(4-46-22) xRAM
(4-46-20) IBEX
(26-40-14) xCACK
(5-44-4) xDTACK1
(4-46-30) xROM
SIM-74HC24S
U30
SIM-74HC32S
U68
(26-40-20) xCDET
(4-46-21) xCRAM
CSM-RCR1U50V
C30
X1
DXC-B01716
SIT-74AS74S

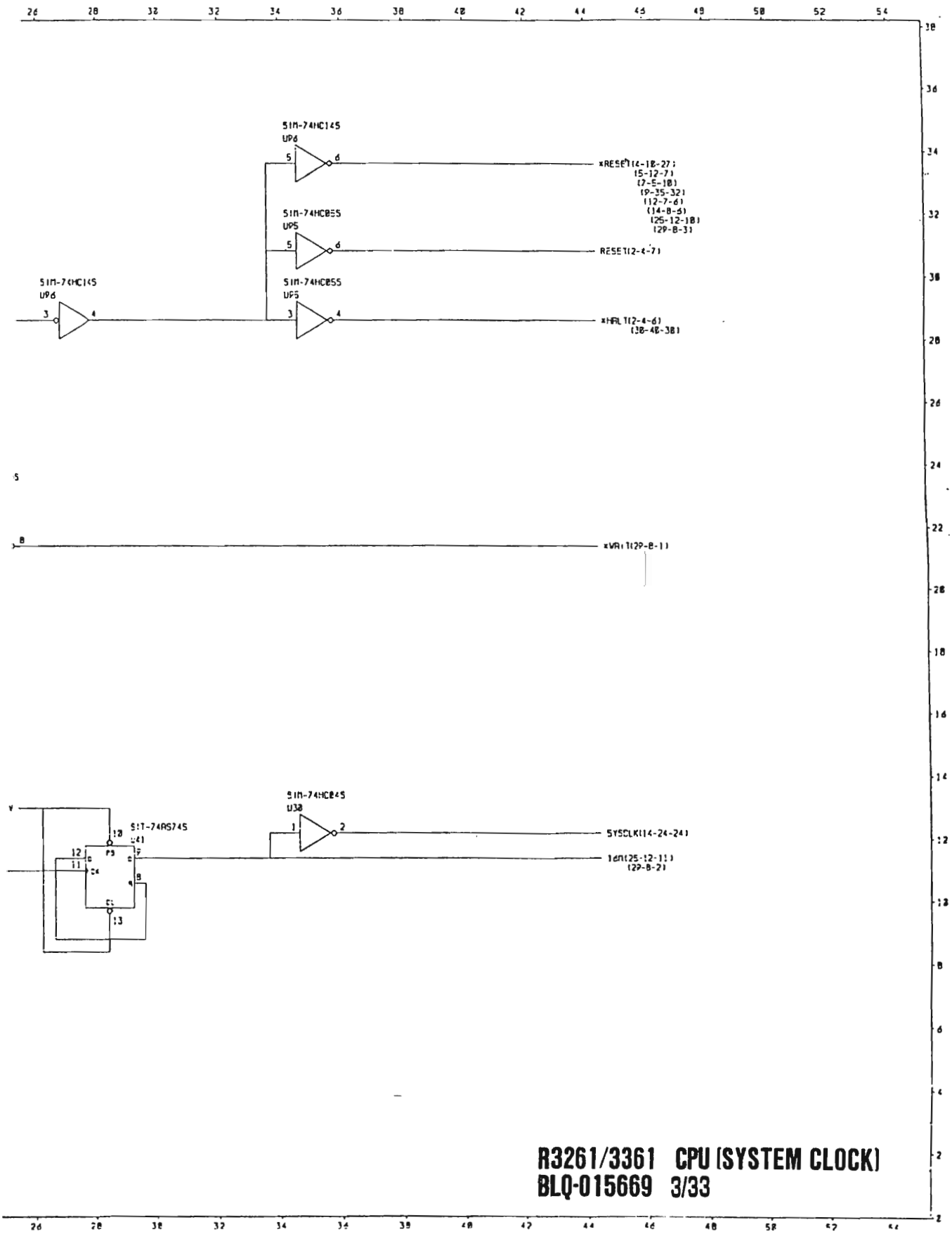

R3261/3361 CPU (SYSTEM CLOCK)
BLQ-015669 3/33

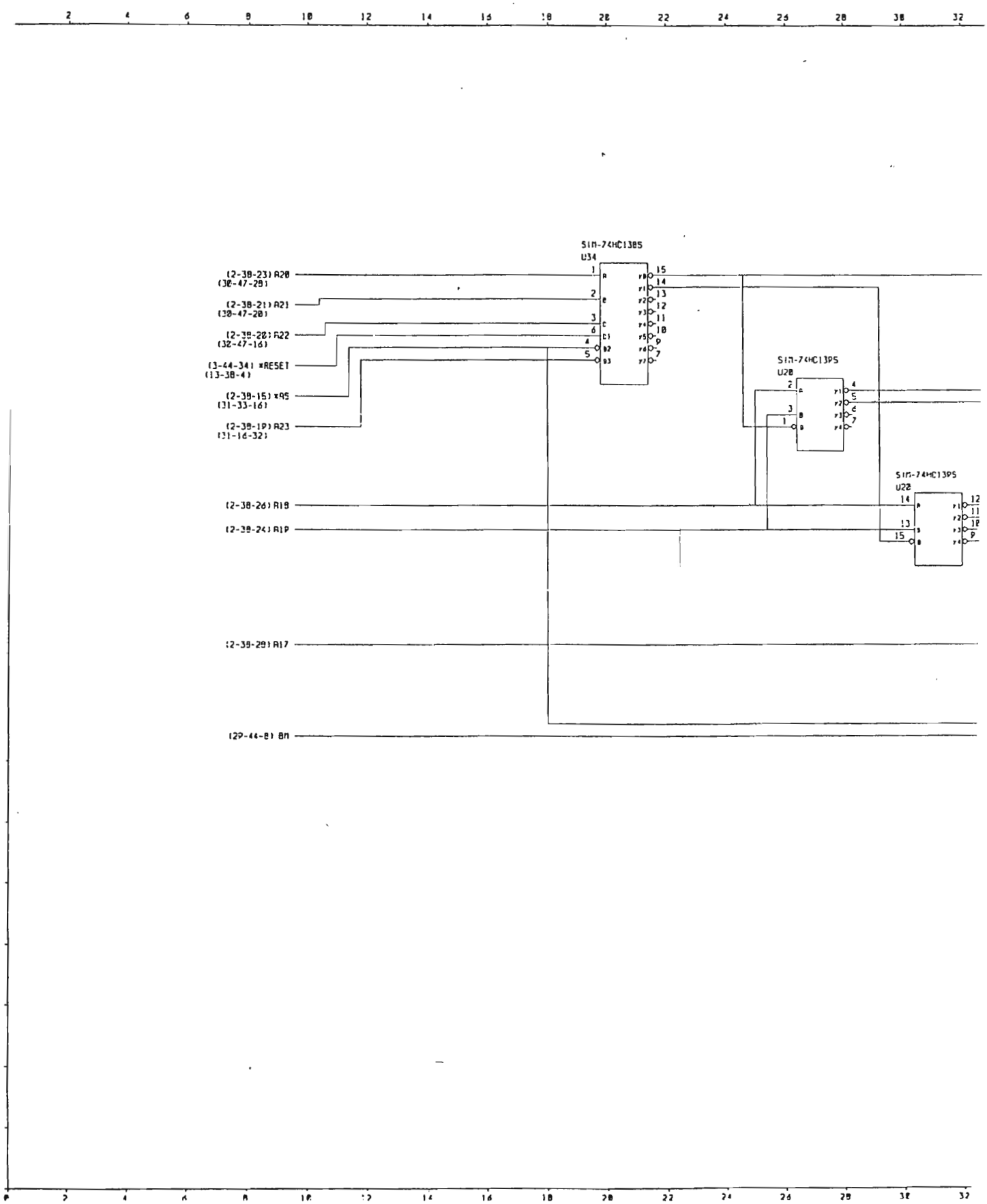
SIM-74HC138S
U34
(2-38-23) A20
(30-47-29)
(2-38-21) A21
(30-47-20)
(2-38-20) A22
(32-47-16)
(3-44-34) *RESET
(13-38-4)
(2-38-15) *RS
(31-33-16)
(2-38-19) A23
(31-16-32)
SIM-74HC13PS
U20
SIM-74HC13PS
U22
(2-38-26) A18
(2-38-24) A19
(2-38-29) A17
(29-44-8) BM

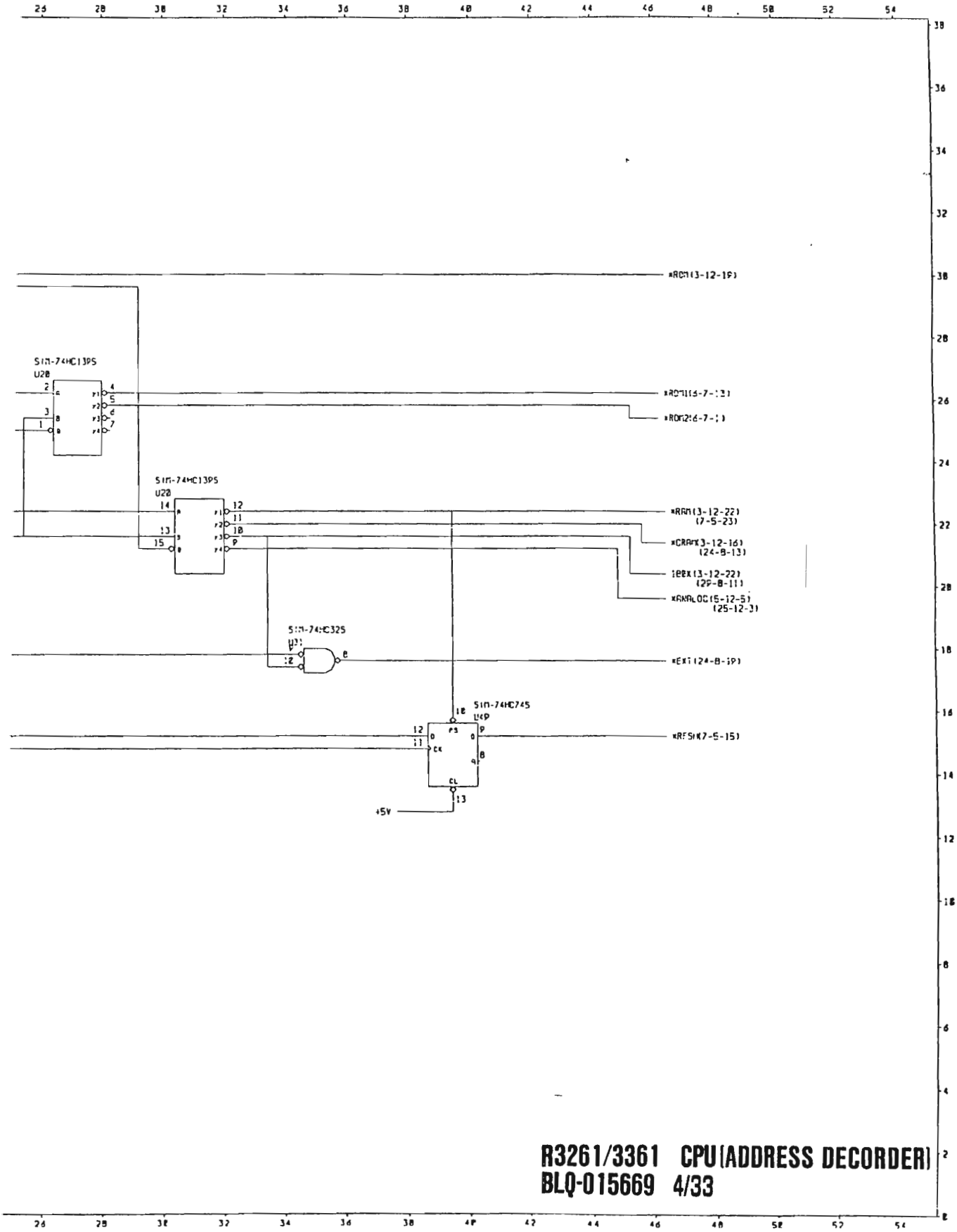

R3261/3361 CPU(ADDRESS DECORDER)
BLQ-015669 4/33

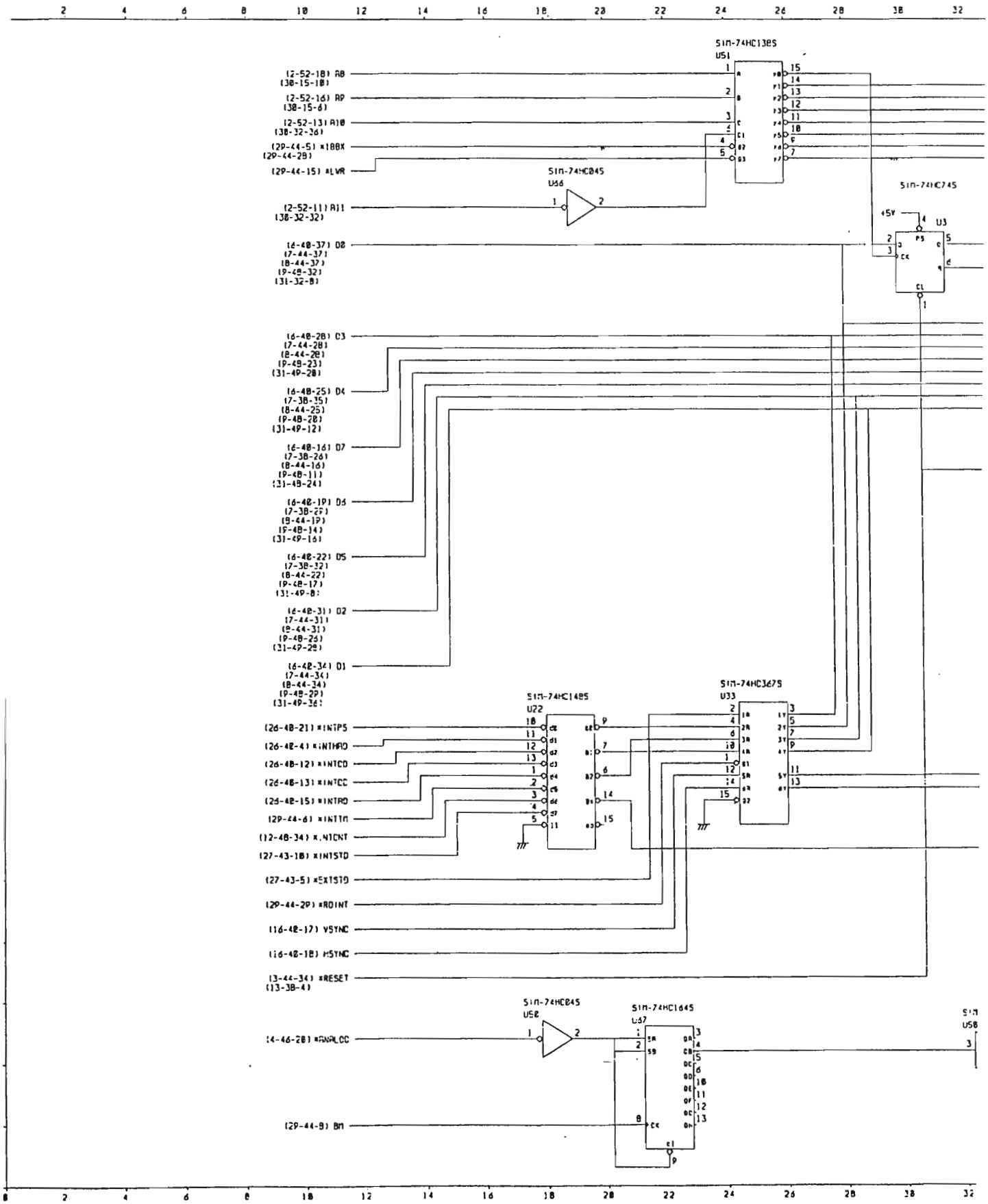
SIM-74HC138S
U51
(2-52-18) A8
(30-15-18)
(2-52-16) A9
(30-15-6)
(2-52-13) A10
(30-32-36)
(29-44-5) *IOBX
(29-44-29)
(29-44-15) *LWR
SIM-74HC04S
U56
(2-52-11) A11
(30-32-32)
SIM-74HC74S
U3
+5V
(6-40-37) D0
(7-44-37)
(8-44-37)
(9-48-32)
(31-32-8)
(6-40-28) D3
(7-44-28)
(8-44-28)
(9-48-23)
(31-49-28)
(6-40-25) D4
(7-38-35)
(8-44-25)
(9-48-20)
(31-49-12)
(6-40-16) D7
(7-38-26)
(8-44-16)
(9-48-11)
(31-49-24)
(6-40-19) D6
(7-38-29)
(8-44-19)
(9-48-14)
(31-49-16)
(6-40-22) D5
(7-38-32)
(8-44-22)
(9-48-17)
(31-49-8)
(6-40-31) D2
(7-44-31)
(8-44-31)
(9-48-26)
(31-49-29)
(6-40-34) D1
(7-44-34)
(8-44-34)
(9-48-29)
(31-49-36)
SIM-74HC148S
U22
SIM-74HC367S
U33
(26-40-21) *INTP5
(26-40-4) *INTHRD
(26-40-12) *INTCD
(26-40-13) *INTCC
(26-40-15) *INTRD
(29-44-6) *INTTM
(12-40-34) *INTCNT
(27-43-18) *INTSTD
(27-43-5) *EXTSTD
(29-44-29) *RDINT
(16-40-17) VSYNC
(16-40-18) HSYNC
(3-44-34) *RESET
(13-38-4)
SIM-74HC04S
U58
SIM-74HC164S
U67
SIM
U58
(4-46-28) *AWALCC
(29-44-9) BM

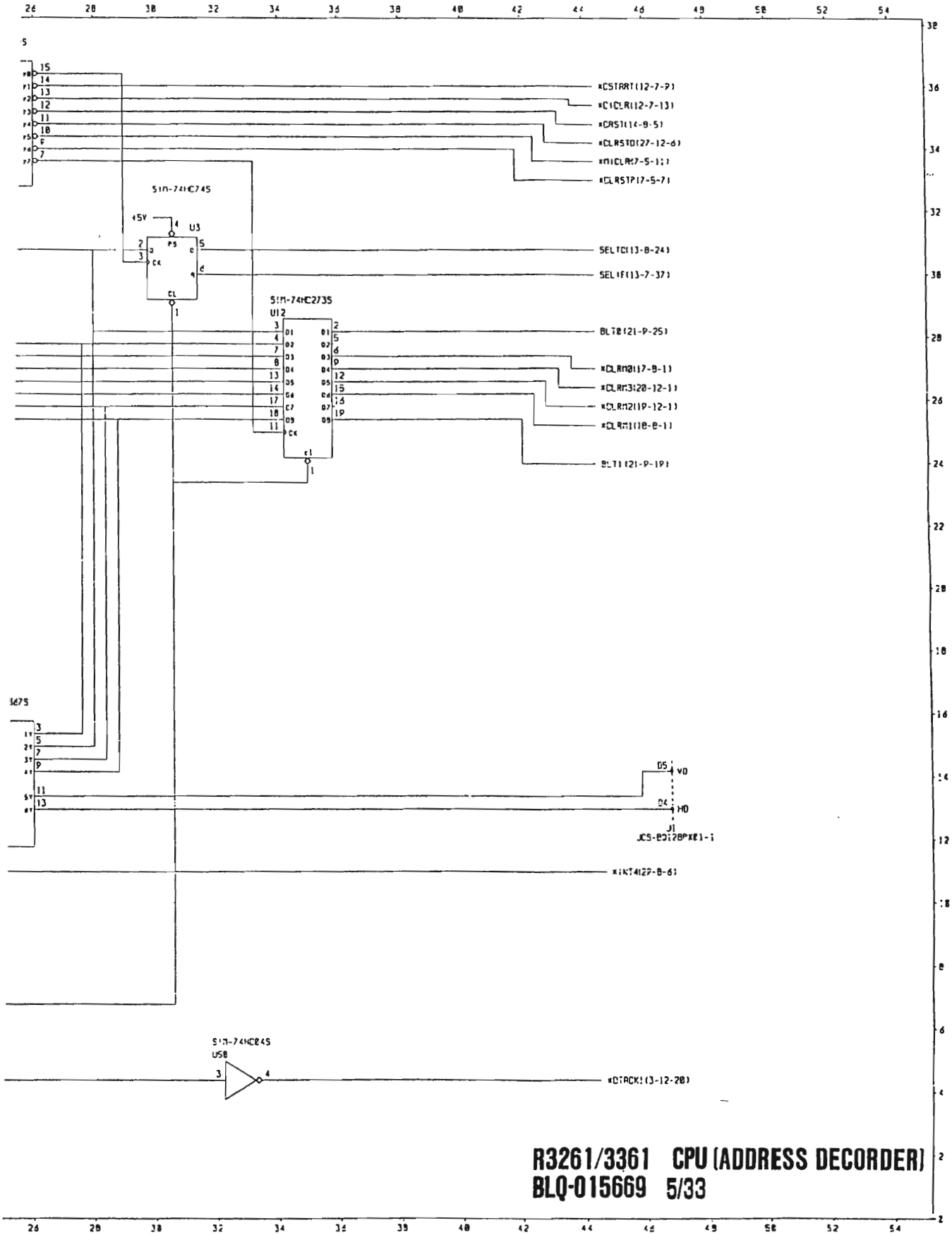

R3261/3361 CPU (ADDRESS DECORDER)
BLQ-015669 5/33

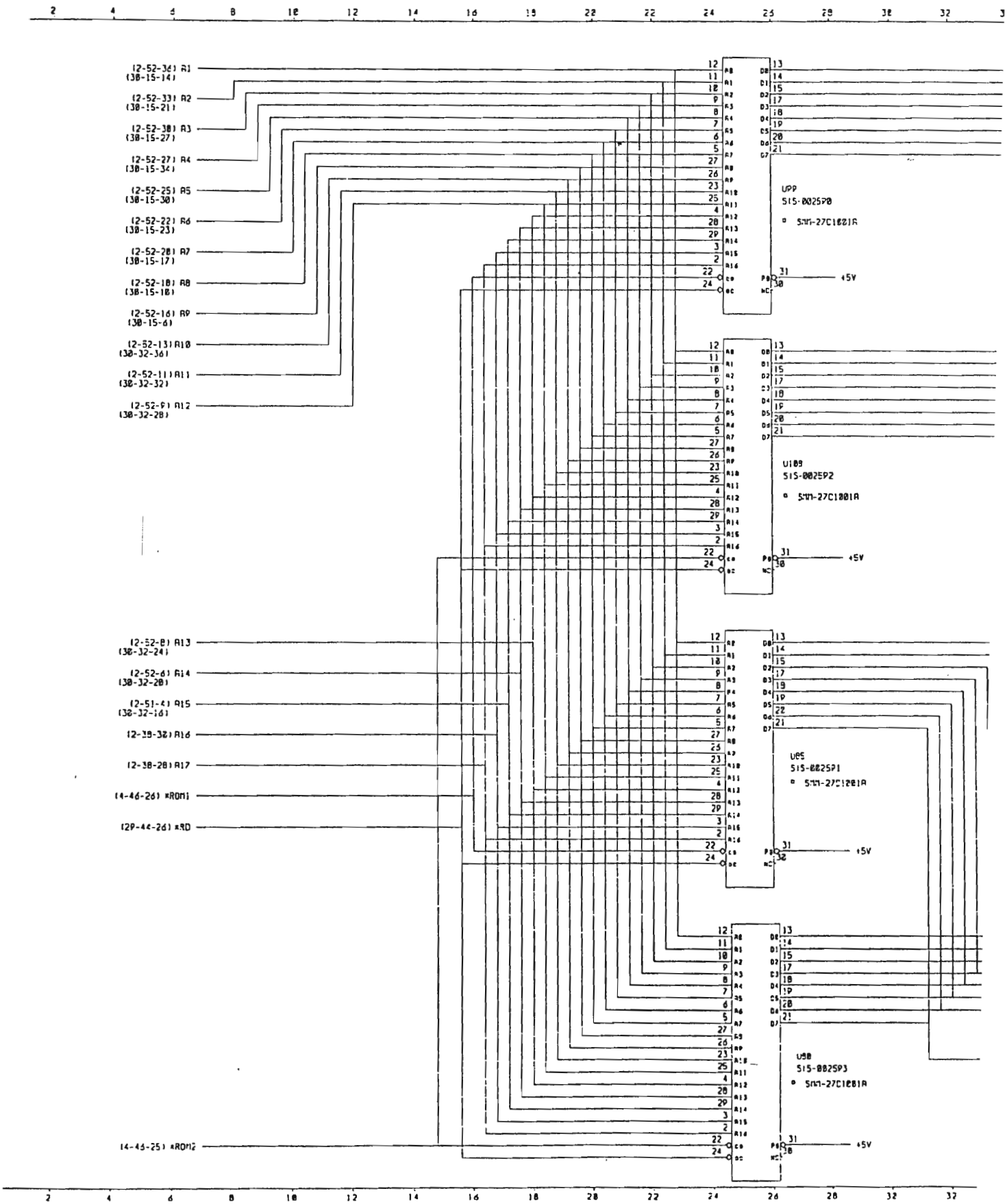
(2-52-36) A1
(30-15-14)
(2-52-33) A2
(30-15-21)
(2-52-30) A3
(30-15-27)
(2-52-27) A4
(30-15-34)
(2-52-25) A5
(30-15-30)
(2-52-22) A6
(30-15-23)
(2-52-20) A7
(30-15-17)
(2-52-18) A8
(30-15-10)
(2-52-16) A9
(30-15-6)
(2-52-13) A10
(30-32-36)
(2-52-11) A11
(30-32-32)
(2-52-9) A12
(30-32-28)
(2-52-8) A13
(30-32-24)
(2-52-6) A14
(30-32-20)
(2-51-4) A15
(30-32-16)
(2-39-32) A16
(2-38-28) A17
(4-46-26) *ROM1
(29-44-26) *RD
(4-46-25) *ROM2
U99
515-002590
SMM-27C1001A
U109
515-002592
SMM-27C1001A
U85
515-002591
SMM-27C1001A
U98
515-002593
SMM-27C1001A
+5V

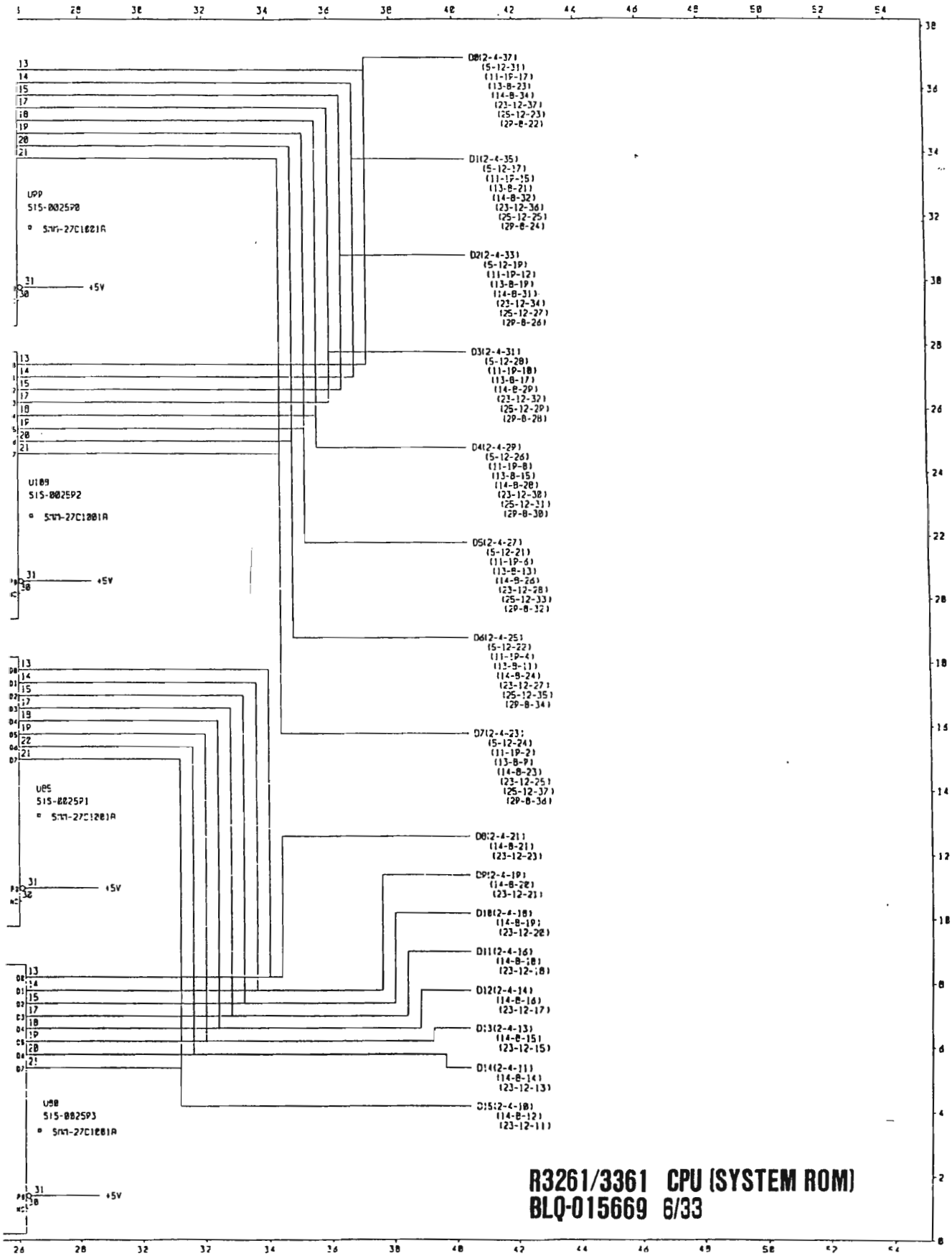

R3261/3361 CPU (SYSTEM ROM)
BLQ-015669 6/33

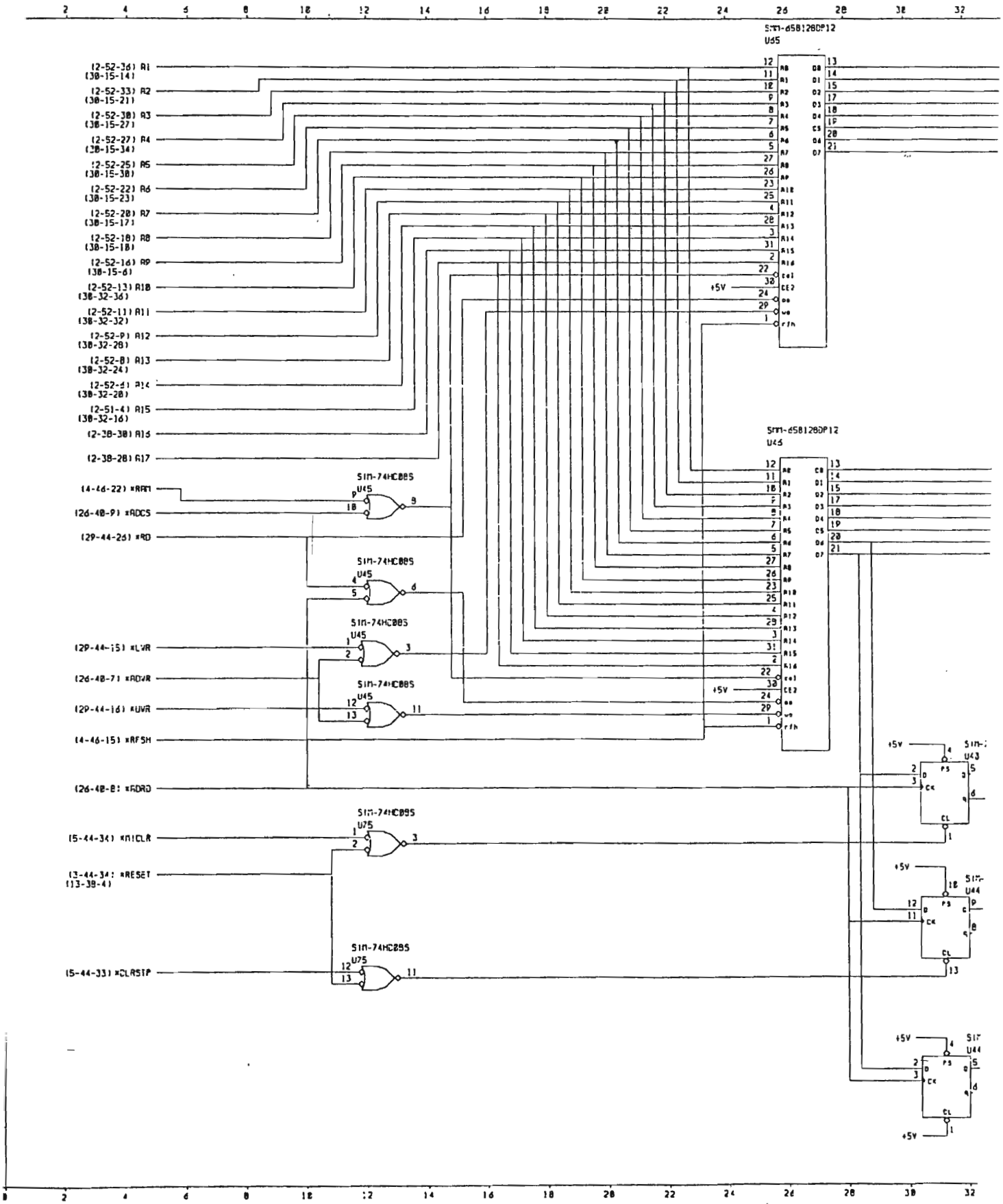
SMM-d581280P12
U45
SMM-d581280P12
U46
SIM-74HC08S
U45
SIM-74HC08S
U45
SIM-74HC08S
U45
SIM-74HC08S
U45
SIM-74HC09S
U75
SIM-74HC09S
U75
(2-52-36) A1
(30-15-14)
(2-52-33) A2
(30-15-21)
(2-52-30) A3
(30-15-27)
(2-52-27) A4
(30-15-34)
(2-52-25) A5
(30-15-38)
(2-52-22) A6
(30-15-23)
(2-52-20) A7
(30-15-17)
(2-52-18) A8
(30-15-18)
(2-52-16) A9
(30-15-6)
(2-52-13) A10
(30-32-36)
(2-52-11) A11
(30-32-32)
(2-52-9) A12
(30-32-28)
(2-52-8) A13
(30-32-24)
(2-52-6) A14
(30-32-20)
(2-51-4) A15
(30-32-16)
(2-38-30) A16
(2-38-28) A17
(4-46-22) *RAM
(26-40-9) *ADCS
(29-44-26) *RD
(29-44-15) *LWR
(26-40-7) *ADWR
(29-44-16) *UWR
(4-46-15) *RFSH
(26-40-8) *ADRD
(5-44-34) *MICLR
(3-44-34) *RESET
(13-38-4)
(5-44-33) *CLRSTP
+5V

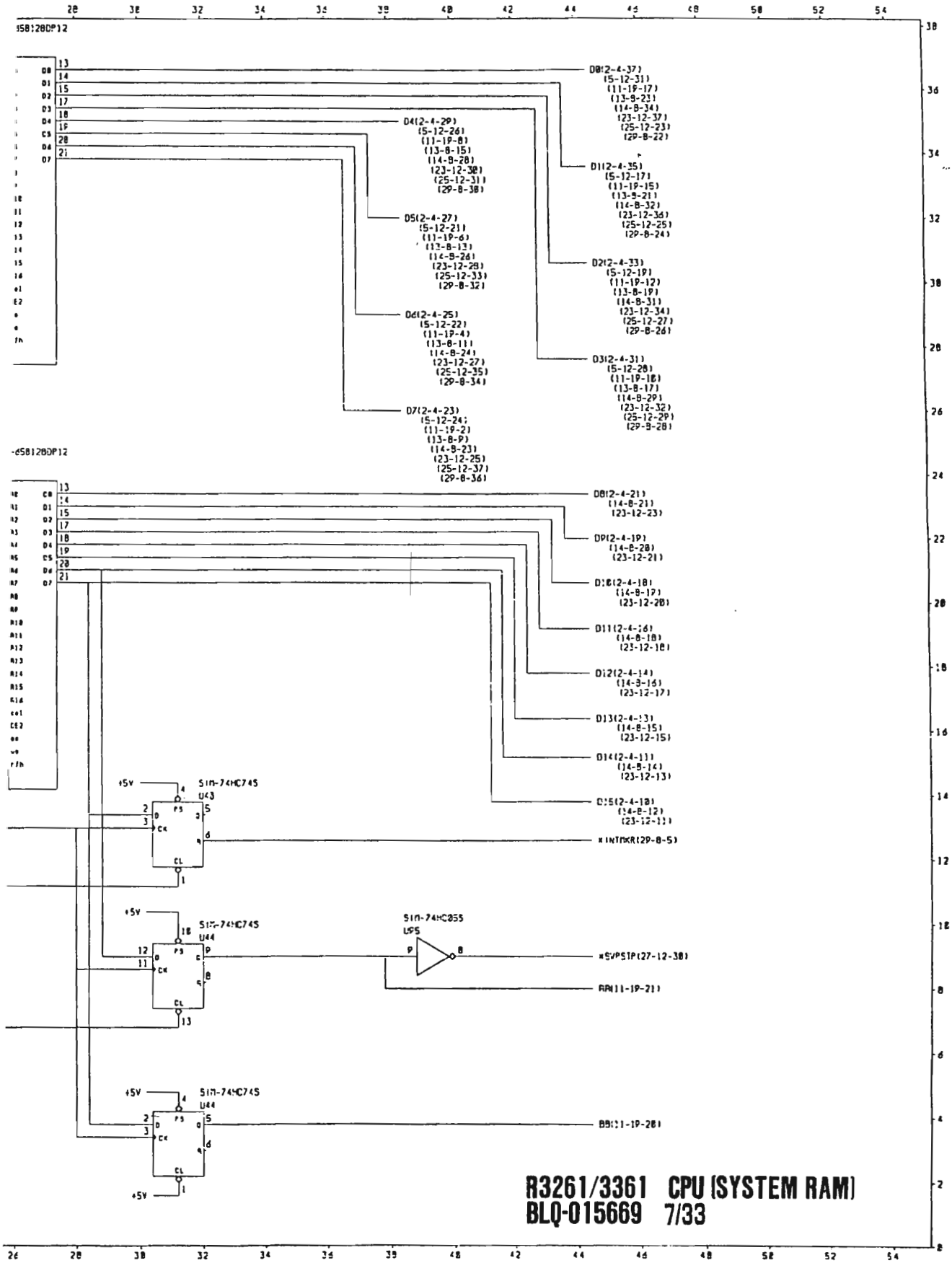

R3261/3361 CPU (SYSTEM RAM)
BLQ-015669 7/33

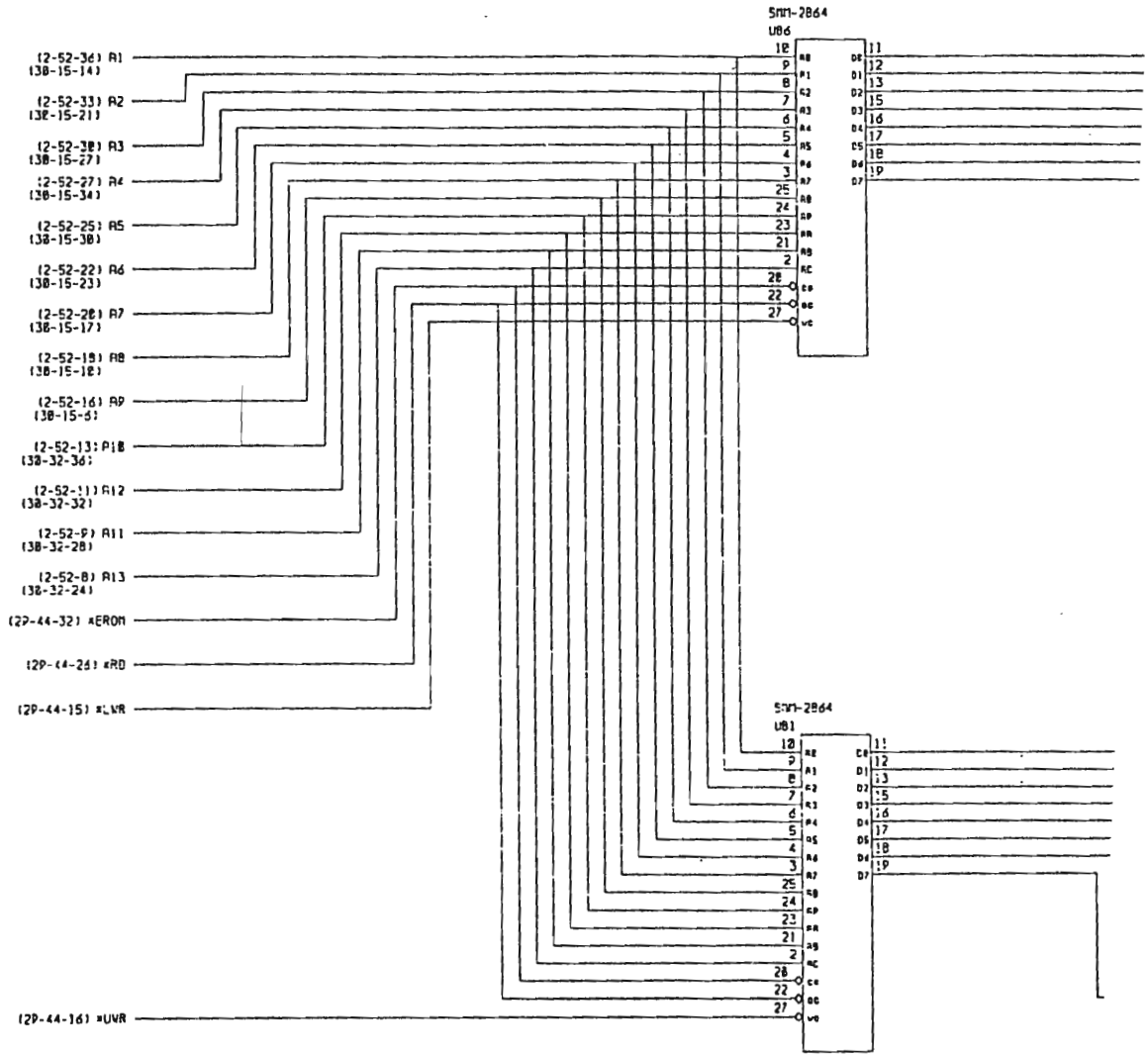
5101-2864
U86
(2-52-36) A1
(30-15-14)
(2-52-33) A2
(30-15-21)
(2-52-30) A3
(30-15-27)
(2-52-27) A4
(30-15-34)
(2-52-25) A5
(30-15-30)
(2-52-22) A6
(30-15-23)
(2-52-20) A7
(30-15-17)
(2-52-19) A8
(30-15-10)
(2-52-16) A9
(30-15-6)
(2-52-13) A10
(30-32-36)
(2-52-11) A12
(30-32-32)
(2-52-9) A11
(30-32-28)
(2-52-8) A13
(30-32-24)
(29-44-32) *EROM
(29-44-26) *RD
(29-44-15) *LWR
5101-2864
U81
(29-44-16) *UWR

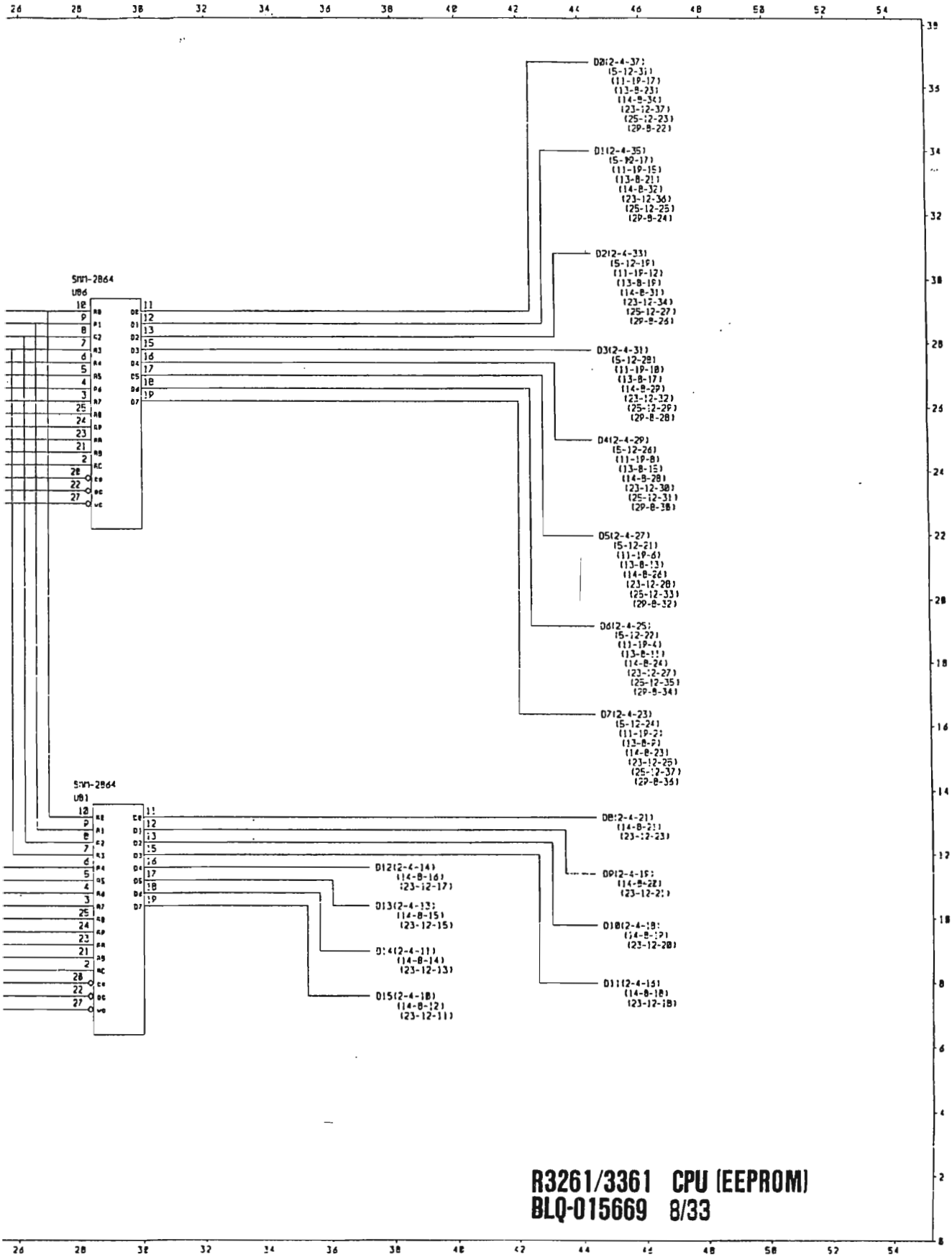

R3261/3361 CPU (EEPROM)
BLQ-015669 8/33

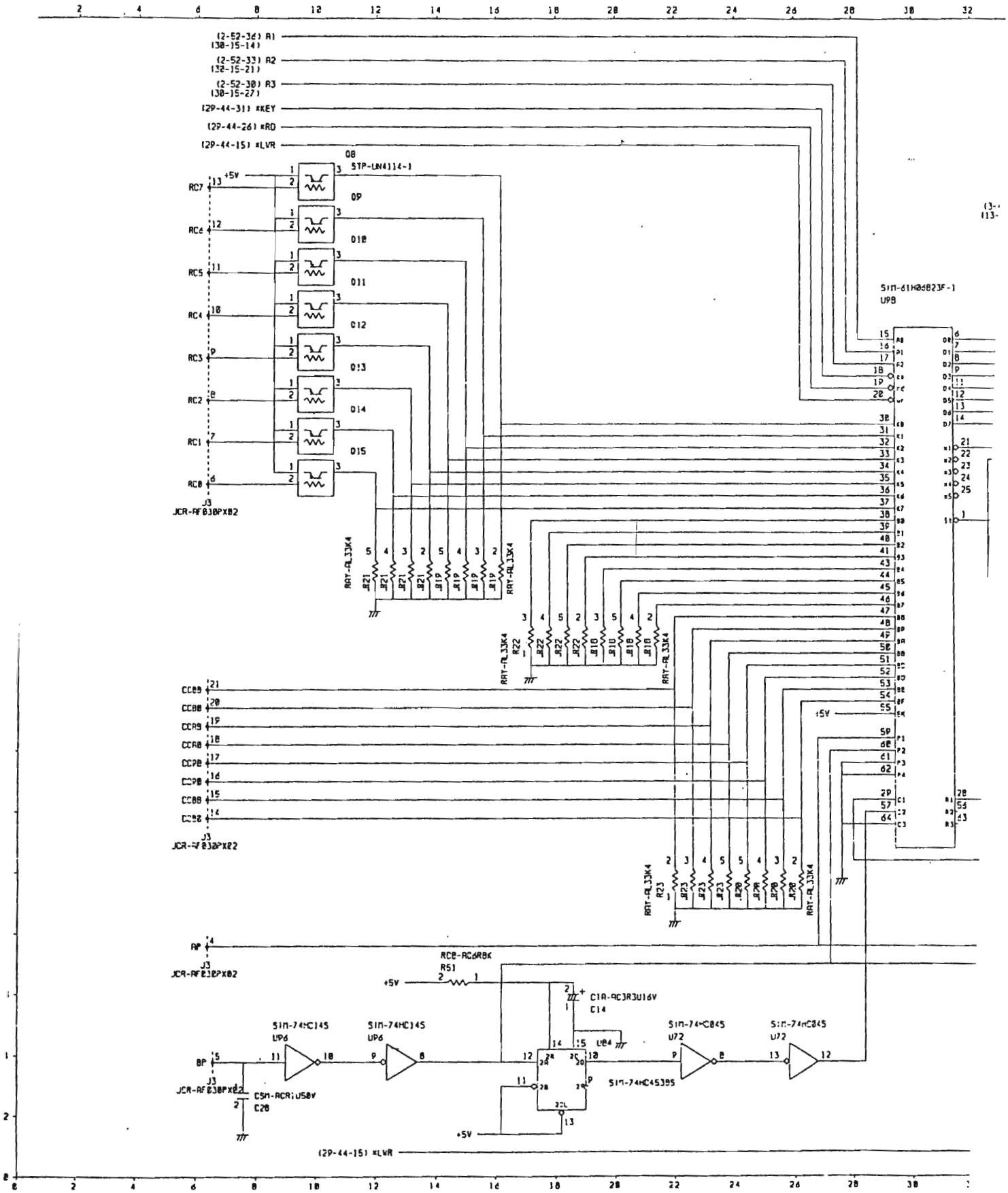
(2-52-36) A1
(30-15-14)
(2-52-33) A2
(32-15-21)
(2-52-30) A3
(30-15-27)
(29-44-31) *KEY
(29-44-26) *RD
(29-44-15) *LVR
Q8
STP-LN4114-1
Q9
Q10
Q11
Q12
Q13
Q14
Q15
+5V
RC7
RC6
RC5
RC4
RC3
RC2
RC1
RC0
J3
JCR-RF030PX02
RAT-RL33K4
R21
R22
R23
SIM-61H06823F-1
U98
CC09
CC08
CC07
CC06
CC05
CC04
CC03
CC02
AP
BP
RC0-RC6R8K
R51
C1A-RC3R3U16V
C14
SIM-74HC14S
U96
U84
SIM-74HC845
U72
SIM-74HC45395
CSM-RCR1U50V
C20
(29-44-15) *LVR

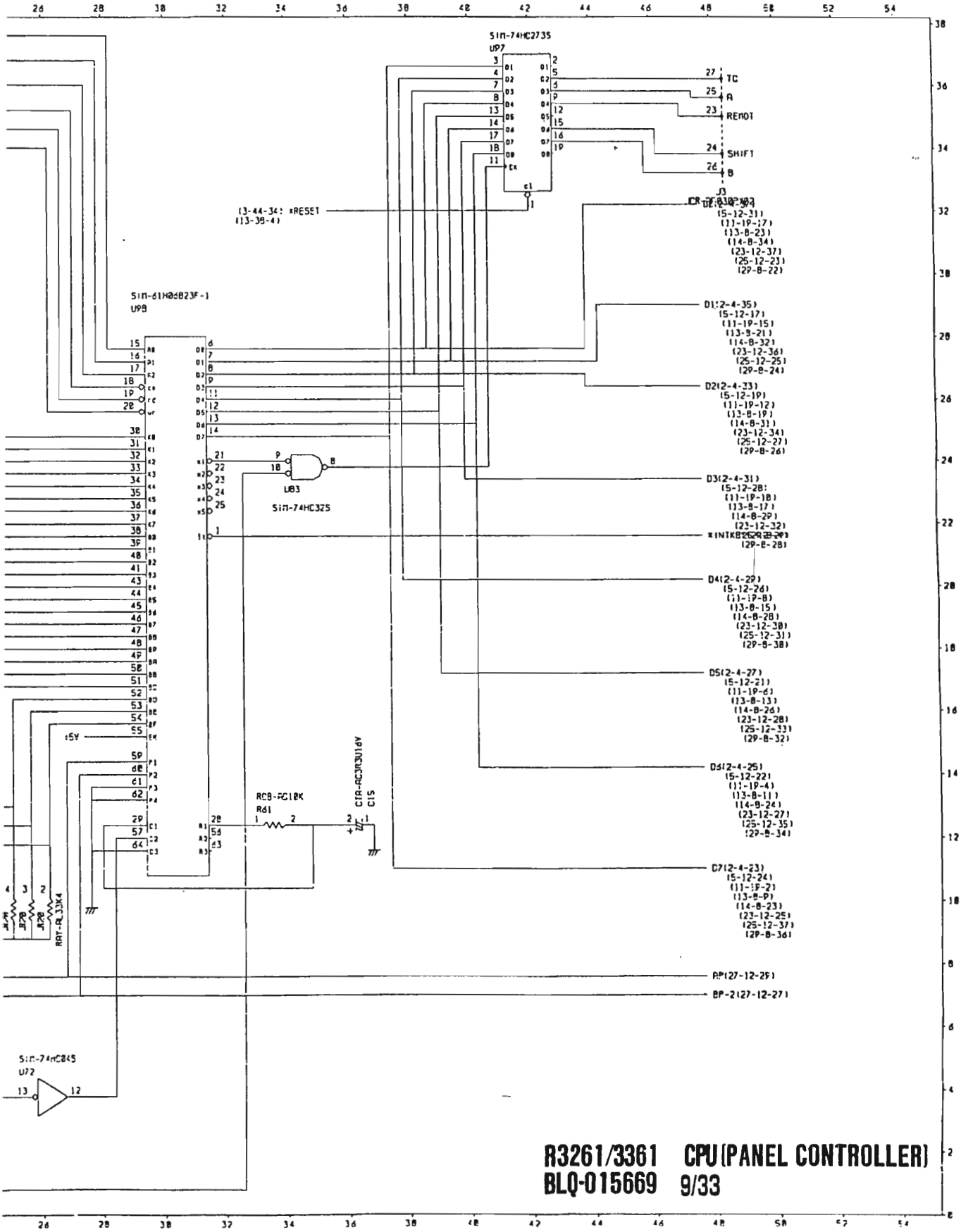

R3261/3361 CPU(PANEL CONTROLLER)
BLQ-015669 9/33

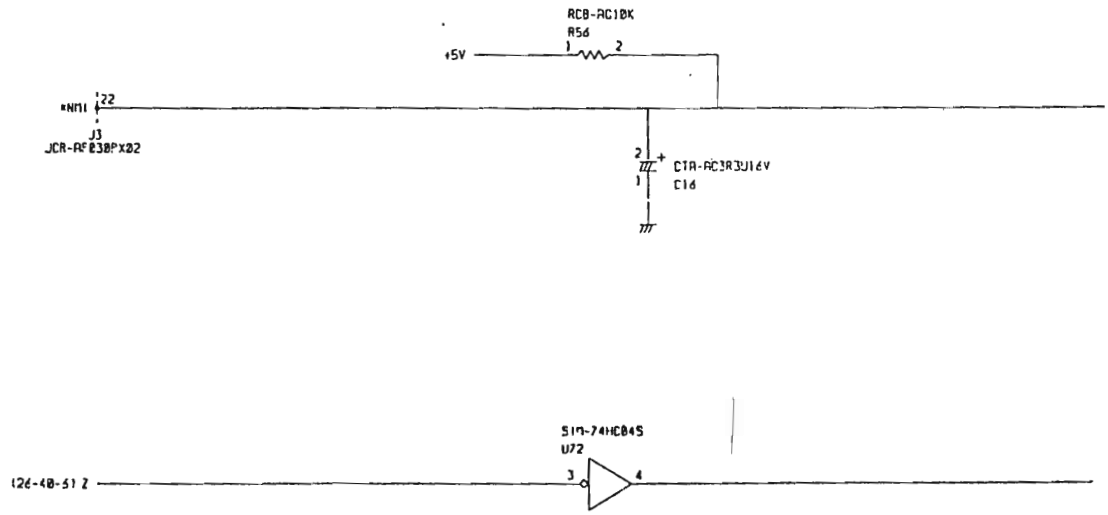
RC8-AC10K
R56
+5V
1
2
*NMI
22
J3
JCR-AF83BPX02
2
1
CTA-AC3R3U16V
C16
SN74HC04S
U72
126-40-51 Z
3
4

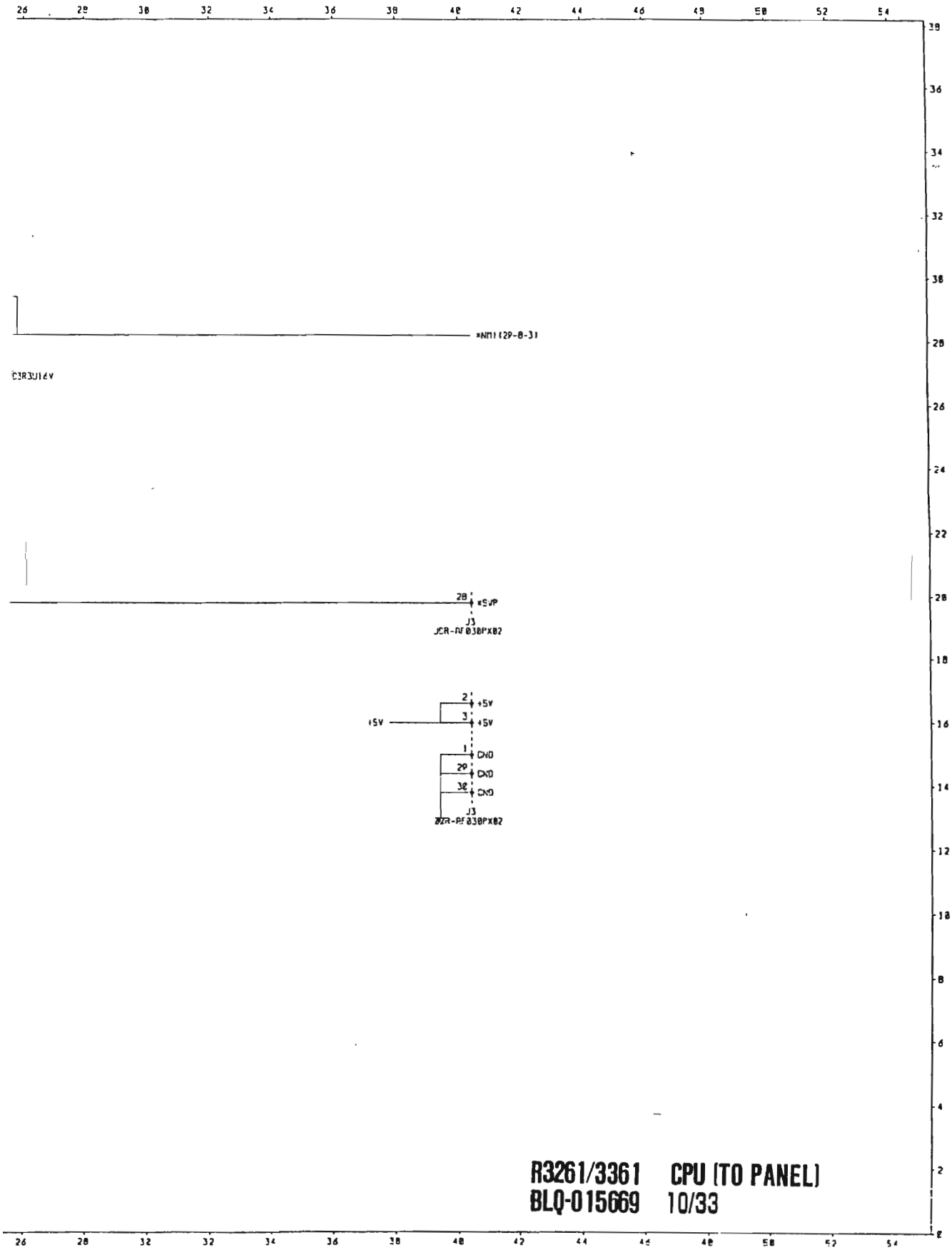

R3261/3361 CPU (TO PANEL)
BLQ-015669 10/33

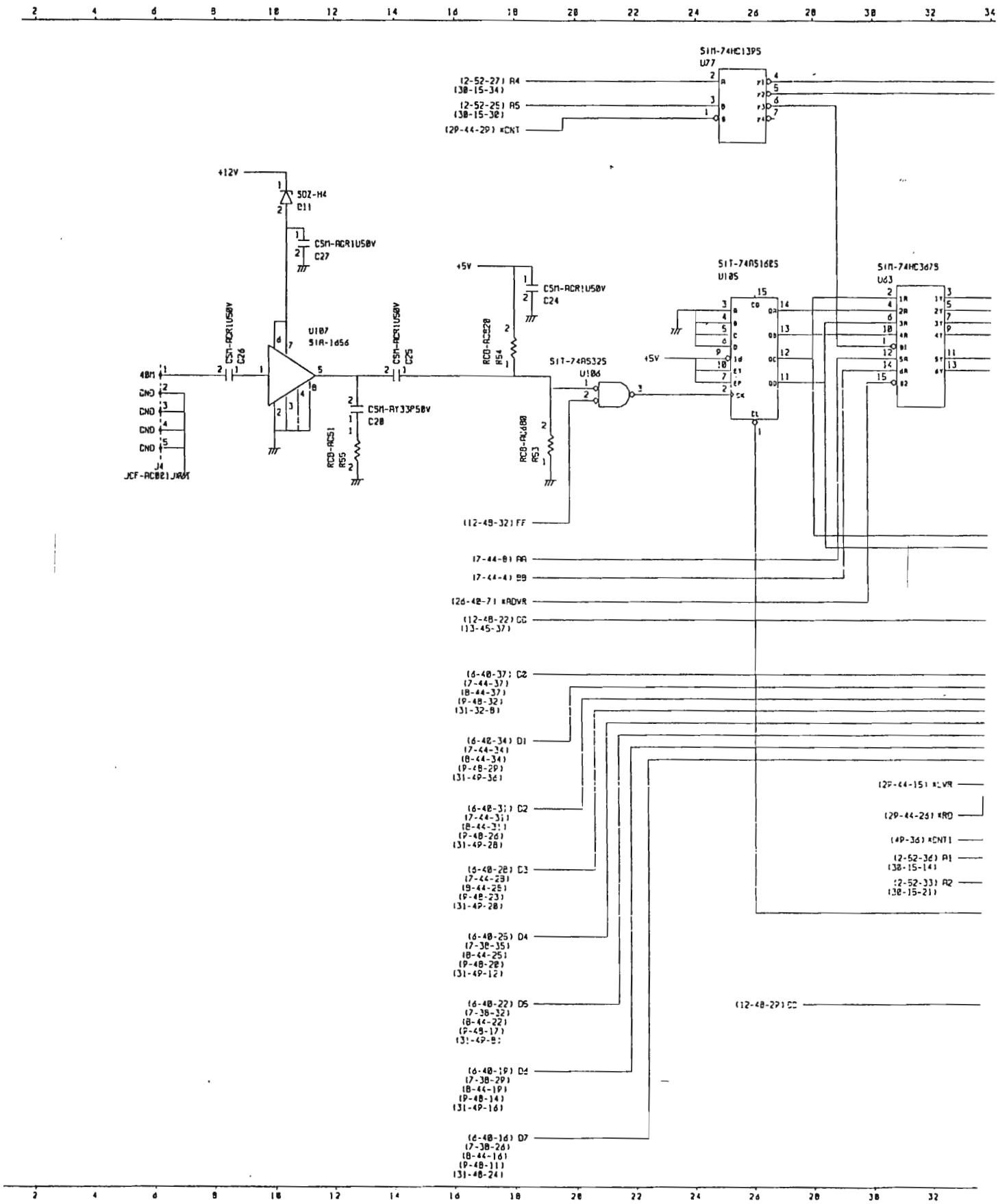
SIM-74HC139S
U77
(2-52-27) A4
(30-15-34)
(2-52-25) A5
(30-15-32)
(29-44-29) xCNT
+12V
SOZ-H4
C11
CSM-ACR1U50V
C27
U107
SIA-1d56
CSM-ACR1U50V
C26
CSM-ACR1U50V
C25
CSM-AY33P50V
C28
RCB-AC51
R55
48M
GND
GND
GND
GND
J4
JCF-ACB21
+5V
CSM-ACR1U50V
C24
RCB-AC320
R54
SIT-74AS32S
U106
RCB-AC680
R53
(12-49-32) FF
SIT-74AS16ES
U105
+5V
SIM-74HC367S
U63
(7-44-8) AA
(7-44-4) BB
(26-40-7) xADVR
(12-48-22) CC
(13-45-37)
(6-40-37) C2
(7-44-37)
(8-44-37)
(9-48-32)
(31-32-8)
(6-40-34) D1
(7-44-34)
(8-44-34)
(9-48-29)
(31-49-36)
(6-40-31) C2
(7-44-31)
(8-44-31)
(9-48-26)
(31-49-28)
(6-40-28) C3
(7-44-28)
(9-44-25)
(9-48-23)
(31-49-20)
(6-40-25) D4
(7-38-35)
(8-44-25)
(9-48-20)
(31-49-12)
(6-40-22) D5
(7-38-32)
(8-44-22)
(9-49-17)
(31-49-8)
(6-40-19) D4
(7-38-29)
(8-44-19)
(9-48-14)
(31-49-16)
(6-40-16) D7
(7-38-26)
(8-44-16)
(9-48-11)
(31-48-24)
(29-44-15) xLVR
(29-44-26) xRD
(49-36) xCNT1
(2-52-36) A1
(30-15-14)
(2-52-33) A2
(30-15-21)
(12-48-29) CC

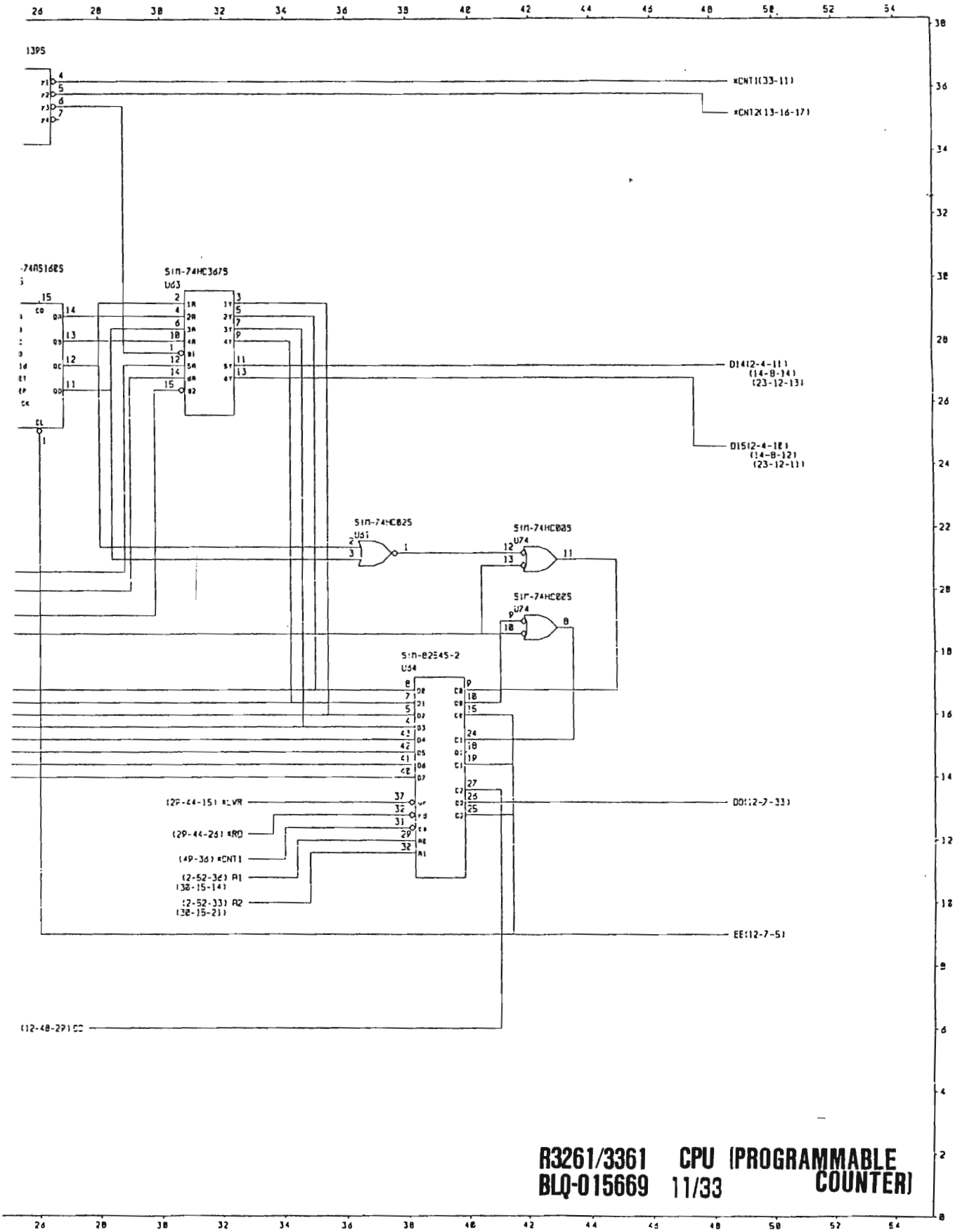

R3261/3361 CPU (PROGRAMMABLE COUNTER)
BLQ-015669 11/33

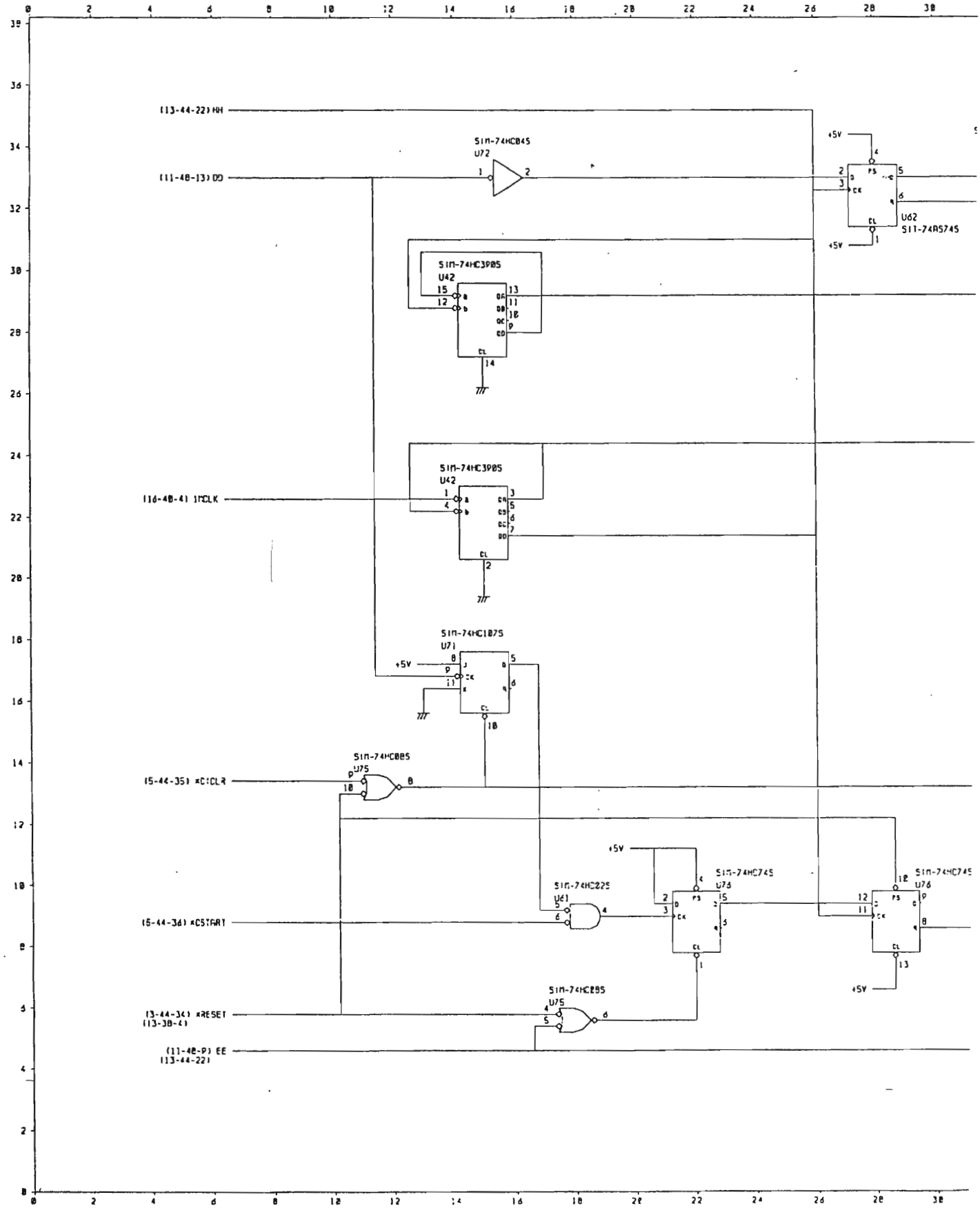
(13-44-22) HH
(11-48-13) DD
SN-74HC845
U72
+5V
U62
SN-74AS745
SN-74HC3905
U42
(16-48-4) 1MCLK
SN-74HC3905
U42
SN-74HC1875
U71
+5V
SN-74HC885
U75
(5-44-35) xCICLR
+5V
SN-74HC225
U61
SN-74HC745
U73
SN-74HC745
U76
(5-44-36) xCSTART
+5V
SN-74HC885
U75
(3-44-3C) xRESET
(13-38-4)
(11-48-P) EE
(13-44-22)

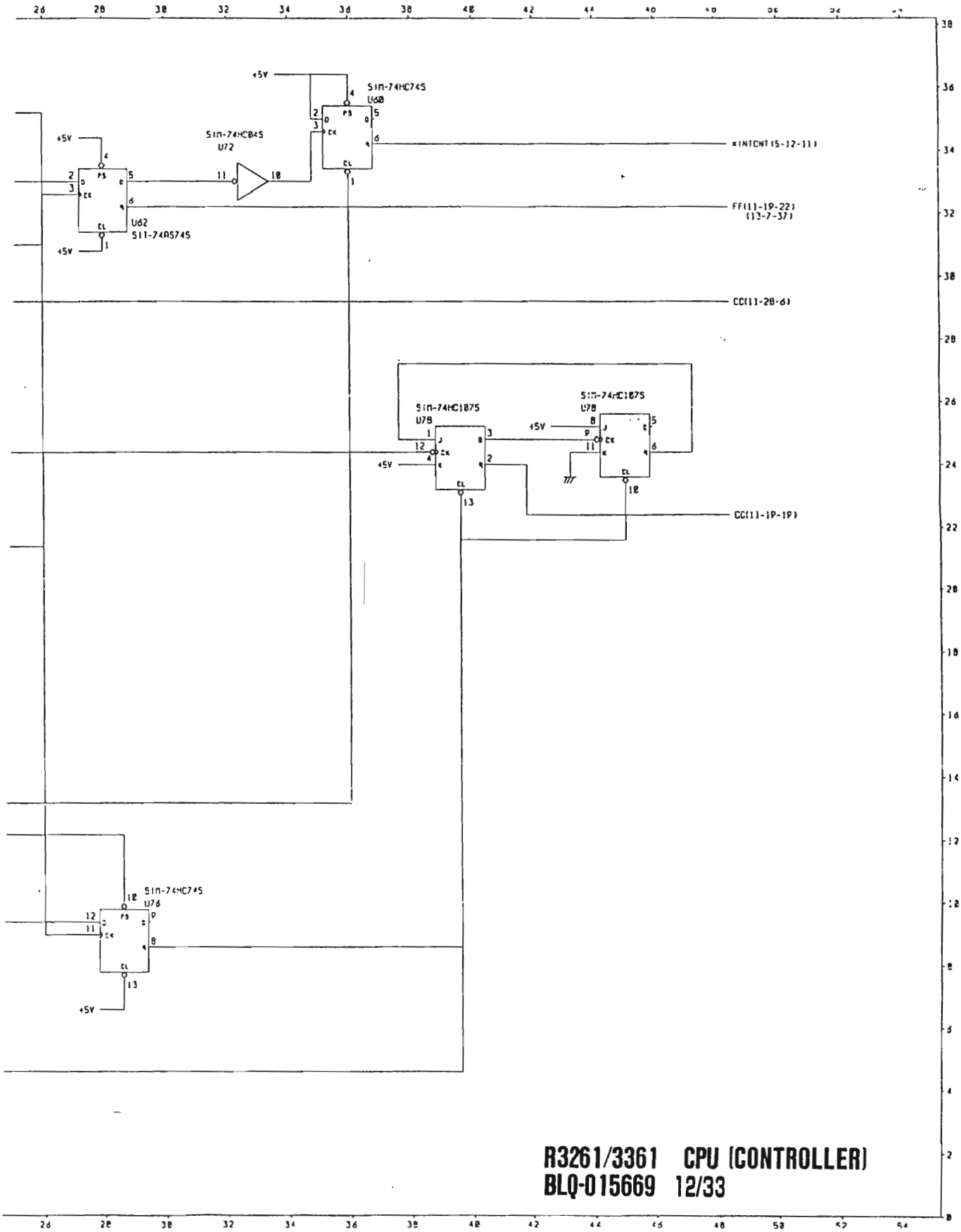

R3261/3361 CPU (CONTROLLER)
BLQ-015669 12/33

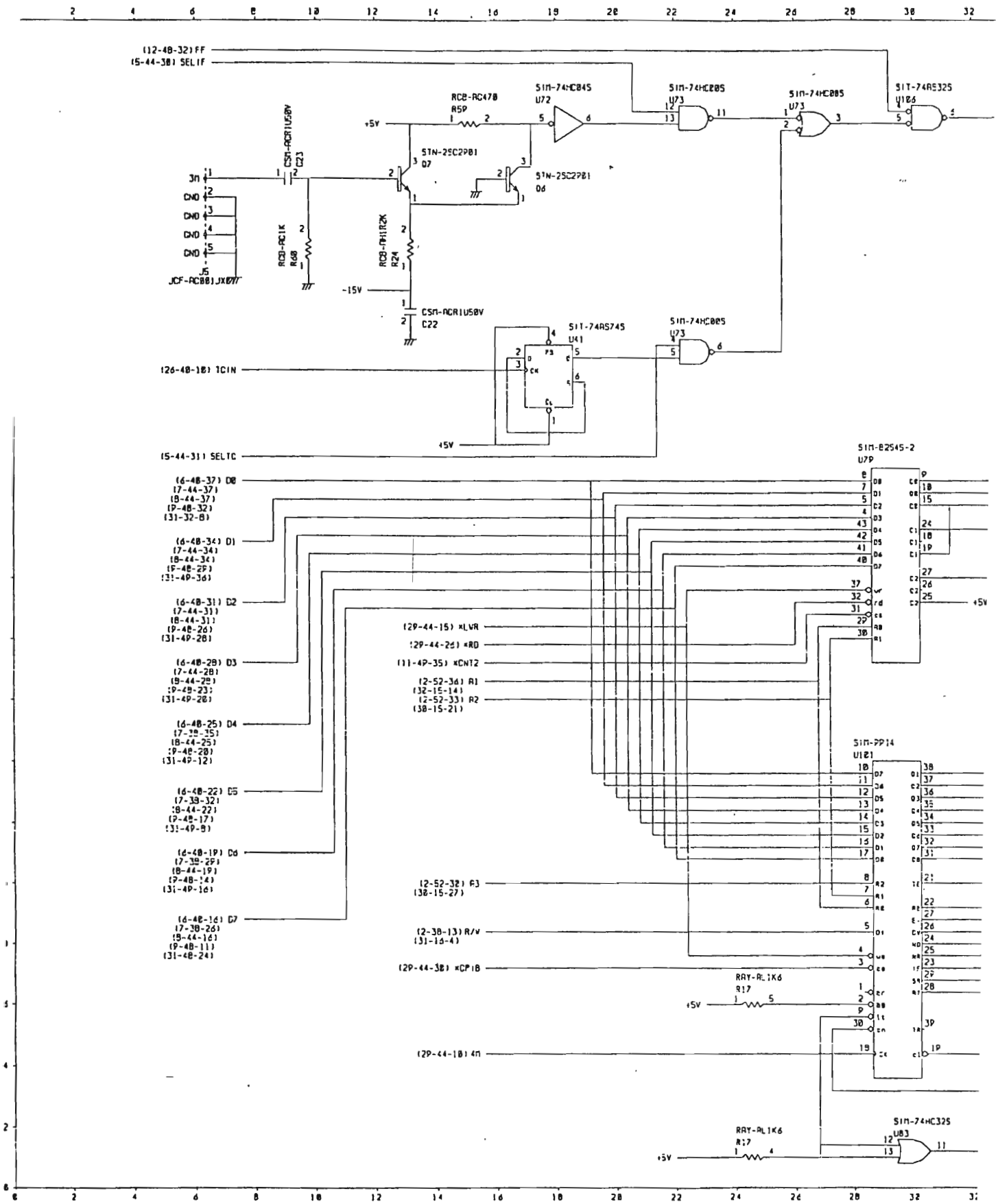
(12-48-32) FF
(5-44-38) SELIF
SIM-74HC04S
U72
SIM-74HC00S
U73
SIT-74AS32S
U106
RCB-RC47Ω
R59
+5V
SIN-2SC2981
Q7
SIN-2SC2981
Q6
CSM-ACR1U50V
C23
3M
GND
GND
GND
GND
J5
JCF-RCB01JX
RCB-RC1K
R68
RCB-RM1R2K
R24
-15V
CSM-ACR1U50V
C22
SIT-74AS74S
U41
SIM-74HC00S
U73
(26-48-18) TCIN
+5V
(5-44-31) SELTC
SIM-82S45-2
U79
(6-48-37) D0
(7-44-37)
(8-44-37)
(9-48-32)
(31-32-8)
(6-48-34) D1
(7-44-34)
(8-44-34)
(9-48-29)
(31-49-36)
(6-48-31) D2
(7-44-31)
(8-44-31)
(9-48-26)
(31-49-28)
(6-48-28) D3
(7-44-28)
(8-44-28)
(9-48-23)
(31-49-28)
(6-48-25) D4
(7-38-35)
(8-44-25)
(9-48-20)
(31-49-12)
(6-48-22) D5
(7-38-32)
(8-44-22)
(9-48-17)
(31-49-8)
(6-48-19) D6
(7-38-29)
(8-44-19)
(9-48-14)
(31-49-16)
(6-48-16) D7
(7-38-26)
(8-44-16)
(9-48-11)
(31-48-24)
(29-44-15) xLWR
(29-44-26) xRD
(11-49-35) xCNT2
(2-52-36) A1
(32-15-14)
(2-52-33) A2
(38-15-21)
SIM-PPI4
U121
(2-52-32) A3
(38-15-27)
(2-38-13) R/W
(31-16-4)
(29-44-38) xCP1B
RAY-RL1K6
R17
+5V
(29-44-18) 4M
SIM-74HC32S
U83
RAY-RL1K6
R17
+5V

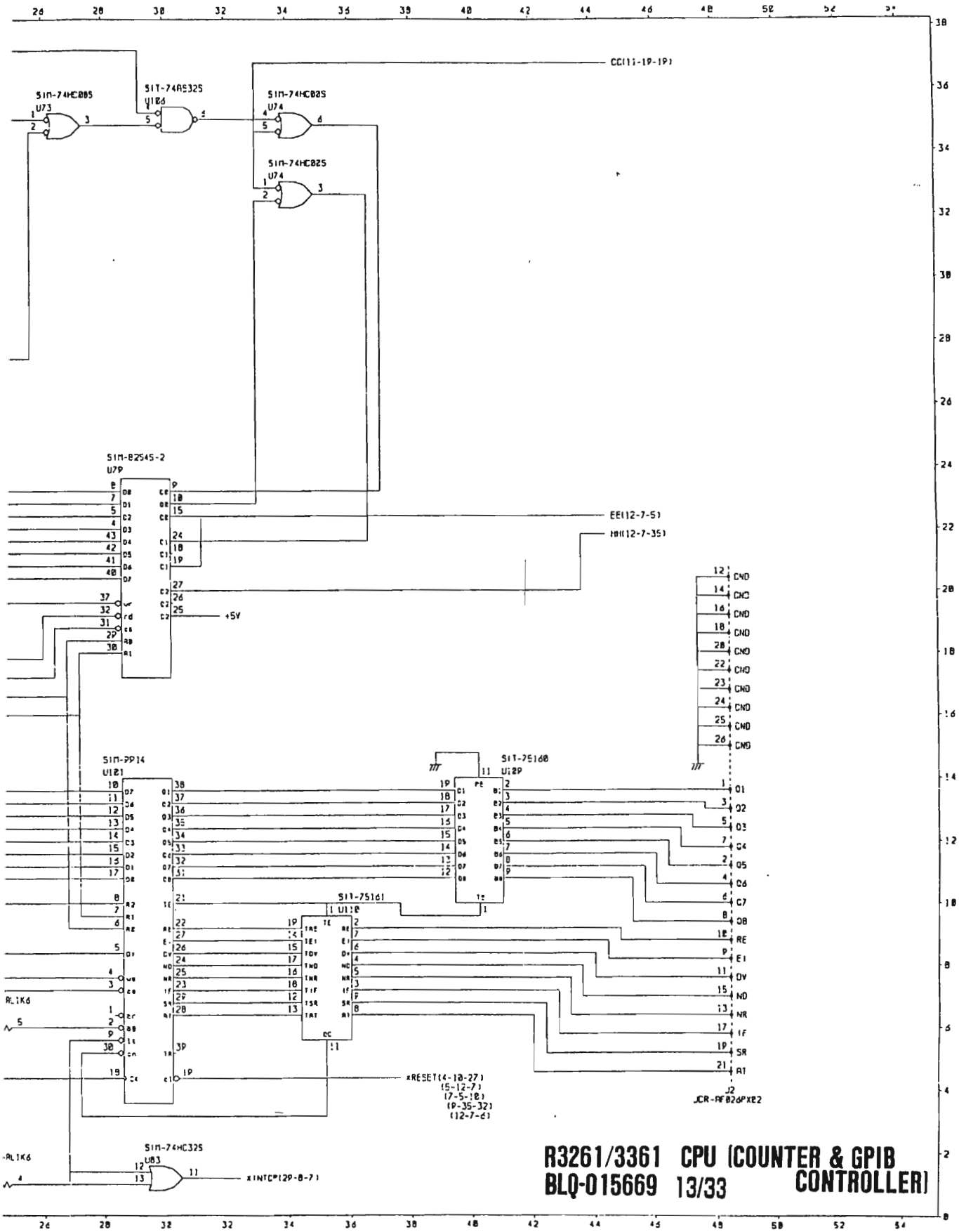

R3261/3361 CPU (COUNTER & GPIB CONTROLLER)
BLQ-015669 13/33

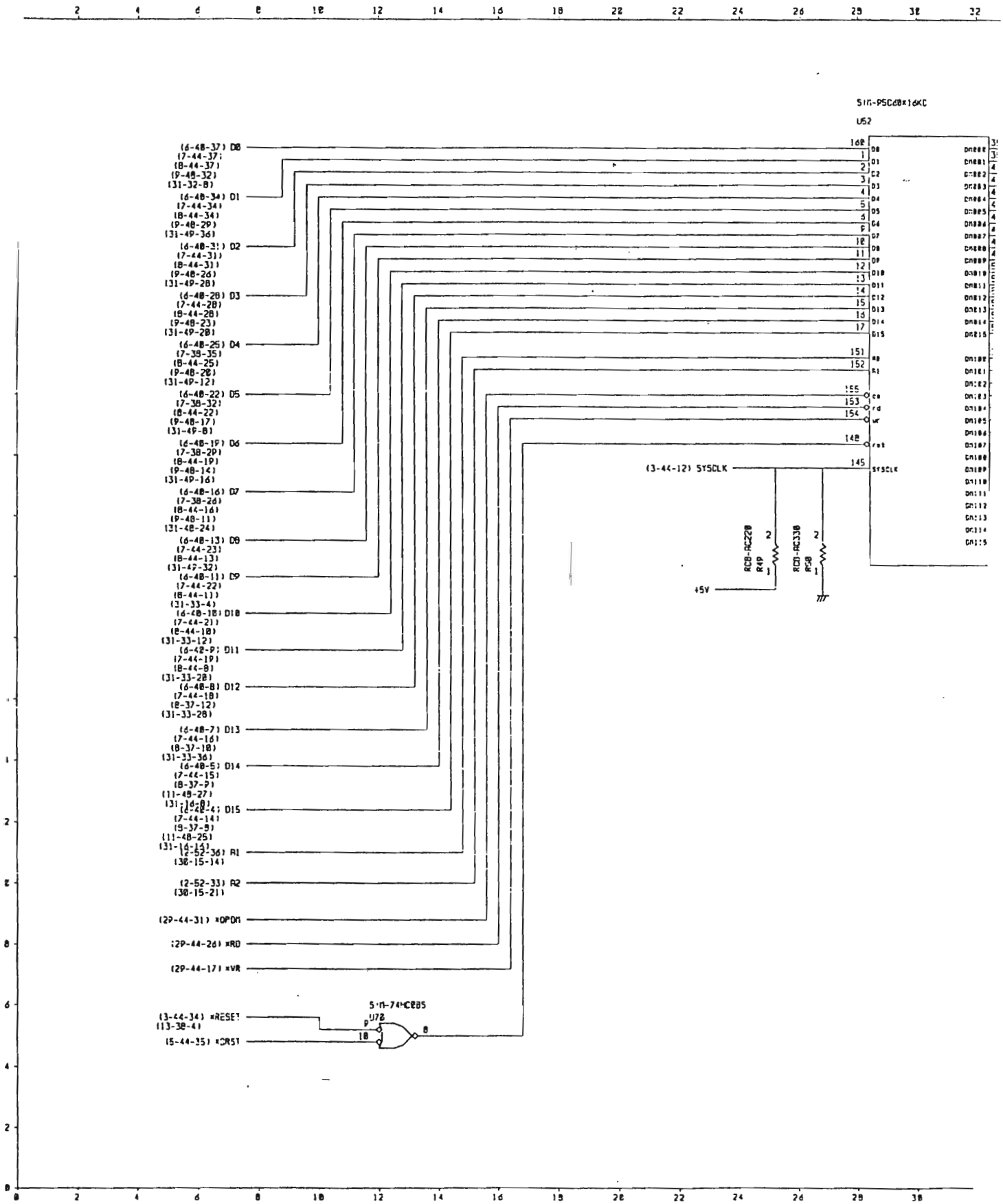
SIM-PSC68K16KC
U52
(6-48-37) D0
(7-44-37)
(8-44-37)
(9-48-32)
(31-32-8)
(6-48-34) D1
(7-44-34)
(8-44-34)
(9-48-29)
(31-49-36)
(6-48-31) D2
(7-44-31)
(8-44-31)
(9-48-26)
(31-49-28)
(6-48-28) D3
(7-44-28)
(8-44-28)
(9-48-23)
(31-49-20)
(6-48-25) D4
(7-39-35)
(8-44-25)
(9-48-20)
(31-49-12)
(6-48-22) D5
(7-38-32)
(8-44-22)
(9-48-17)
(31-49-8)
(6-48-19) D6
(7-38-29)
(8-44-19)
(9-48-14)
(31-49-16)
(6-48-16) D7
(7-38-26)
(8-44-16)
(9-48-11)
(31-48-24)
(6-48-13) D8
(7-44-23)
(8-44-13)
(31-49-32)
(6-48-11) D9
(7-44-22)
(8-44-11)
(31-33-4)
(6-48-10) D10
(7-44-21)
(8-44-10)
(31-33-12)
(6-48-9) D11
(7-44-19)
(8-44-8)
(31-33-20)
(6-48-8) D12
(7-44-18)
(8-37-12)
(31-33-28)
(6-48-7) D13
(7-44-16)
(8-37-10)
(31-33-36)
(6-48-5) D14
(7-44-15)
(8-37-9)
(11-48-27)
(31-16-20)
(6-48-4) D15
(7-44-14)
(8-37-5)
(11-48-25)
(31-16-14)
(2-52-36) A1
(30-15-14)
(2-52-33) A2
(30-15-21)
(29-44-31) *OPDN
(29-44-26) *RD
(29-44-17) *WR
(3-44-34) *RESET
(13-38-4)
(5-44-35) *CRST
SIM-74HC00S
U72
(3-44-12) SYSCLK
RC8-RC228
R49
RC3-RC338
R58
+5V

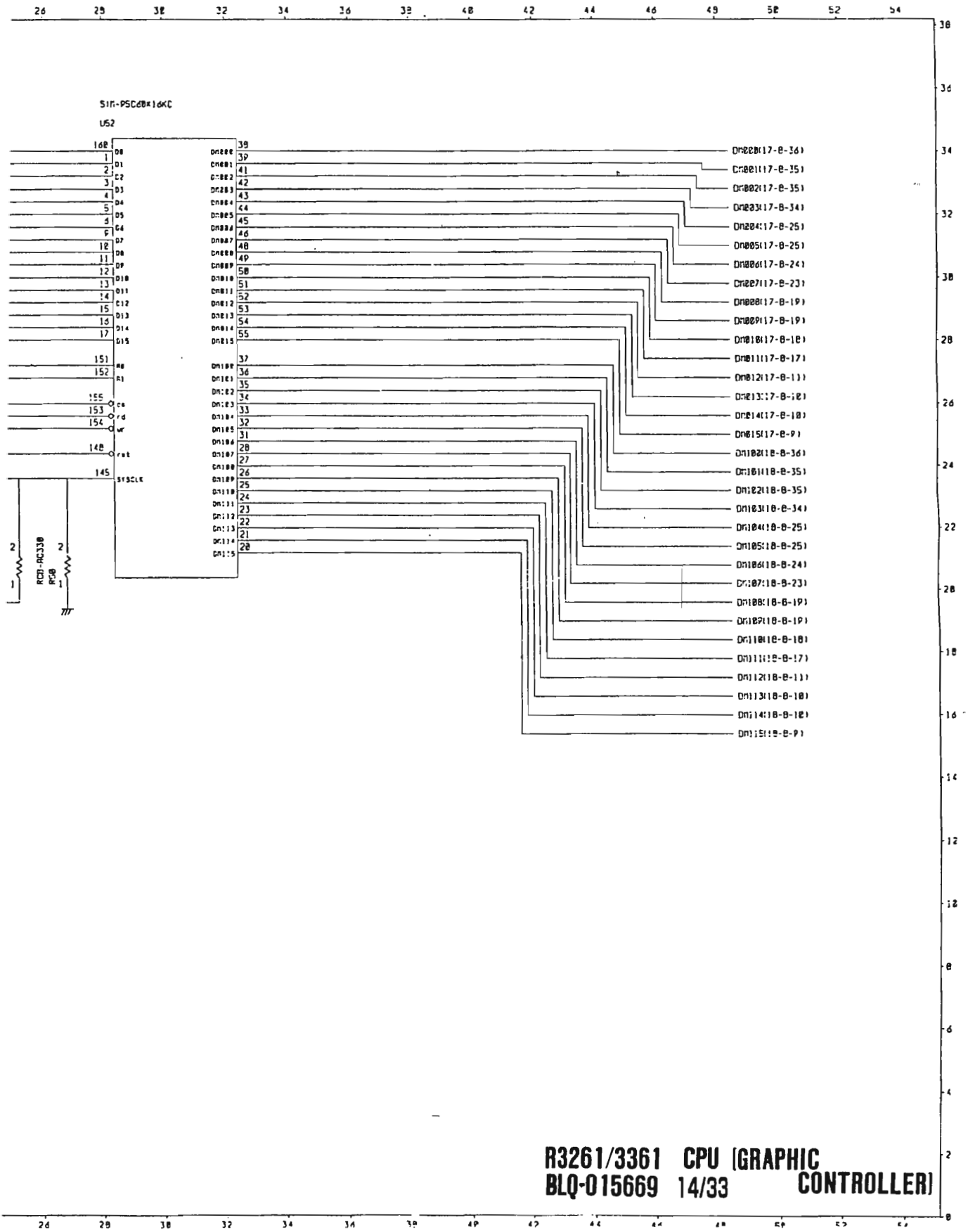

R3261/3361 CPU (GRAPHIC CONTROLLER)
BLQ-015669 14/33

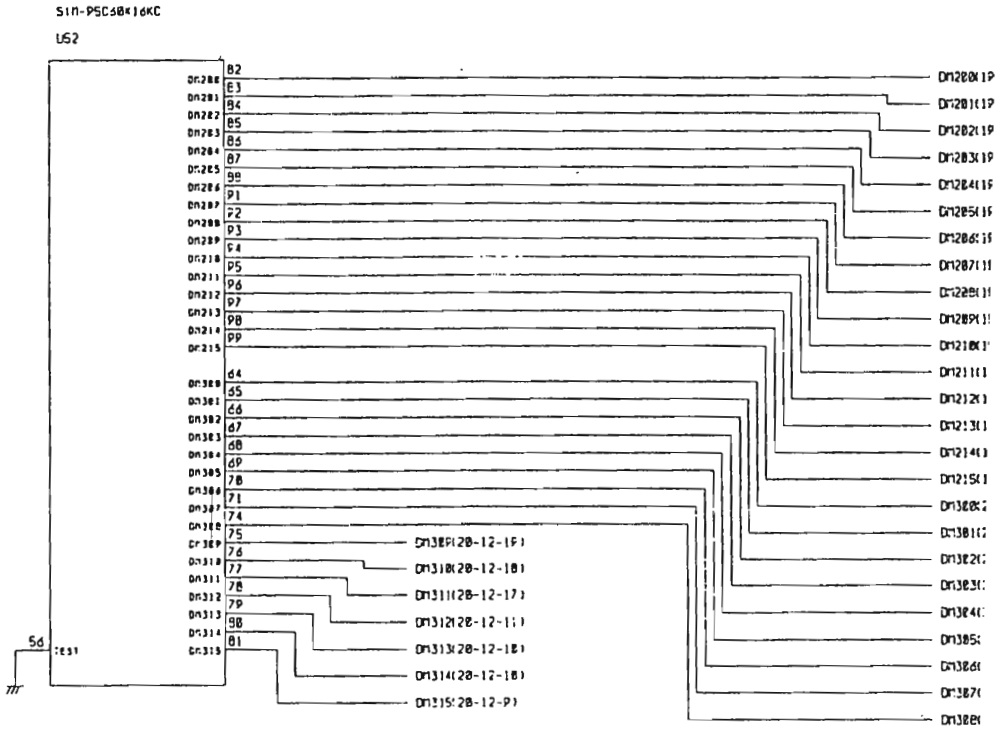
SIM-PSC80K16KC
US2
82
E3
84
85
86
87
90
91
92
93
94
95
96
97
98
99
64
65
66
67
68
69
70
71
74
75
76
77
78
79
80
81
5d
DM310(20-12-18)
DM311(20-12-17)
DM313(20-12-18)
DM314(20-12-18)
DM315(20-12-9)

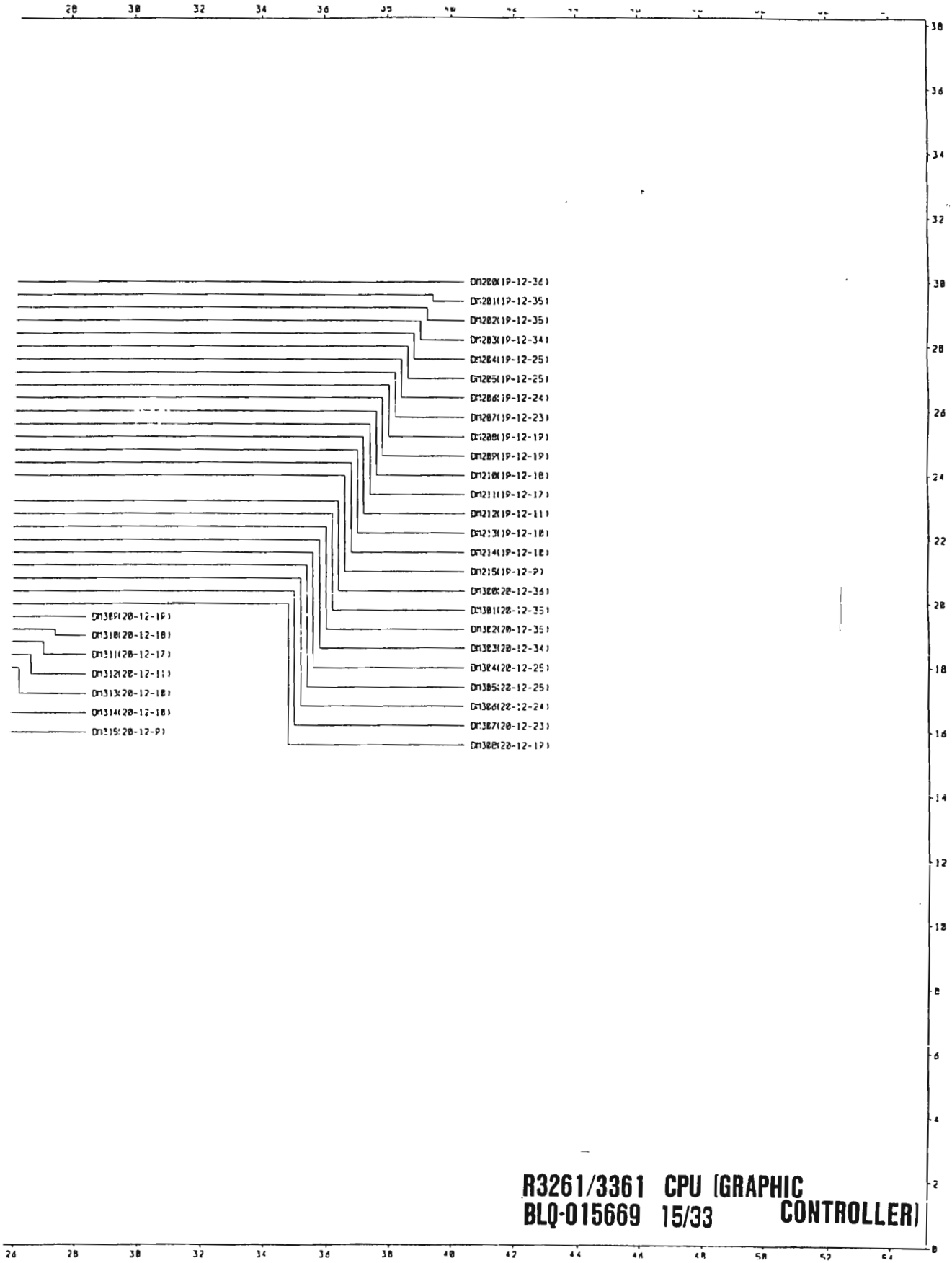

R3261/3361 CPU (GRAPHIC CONTROLLER)
BLQ-015669 15/33

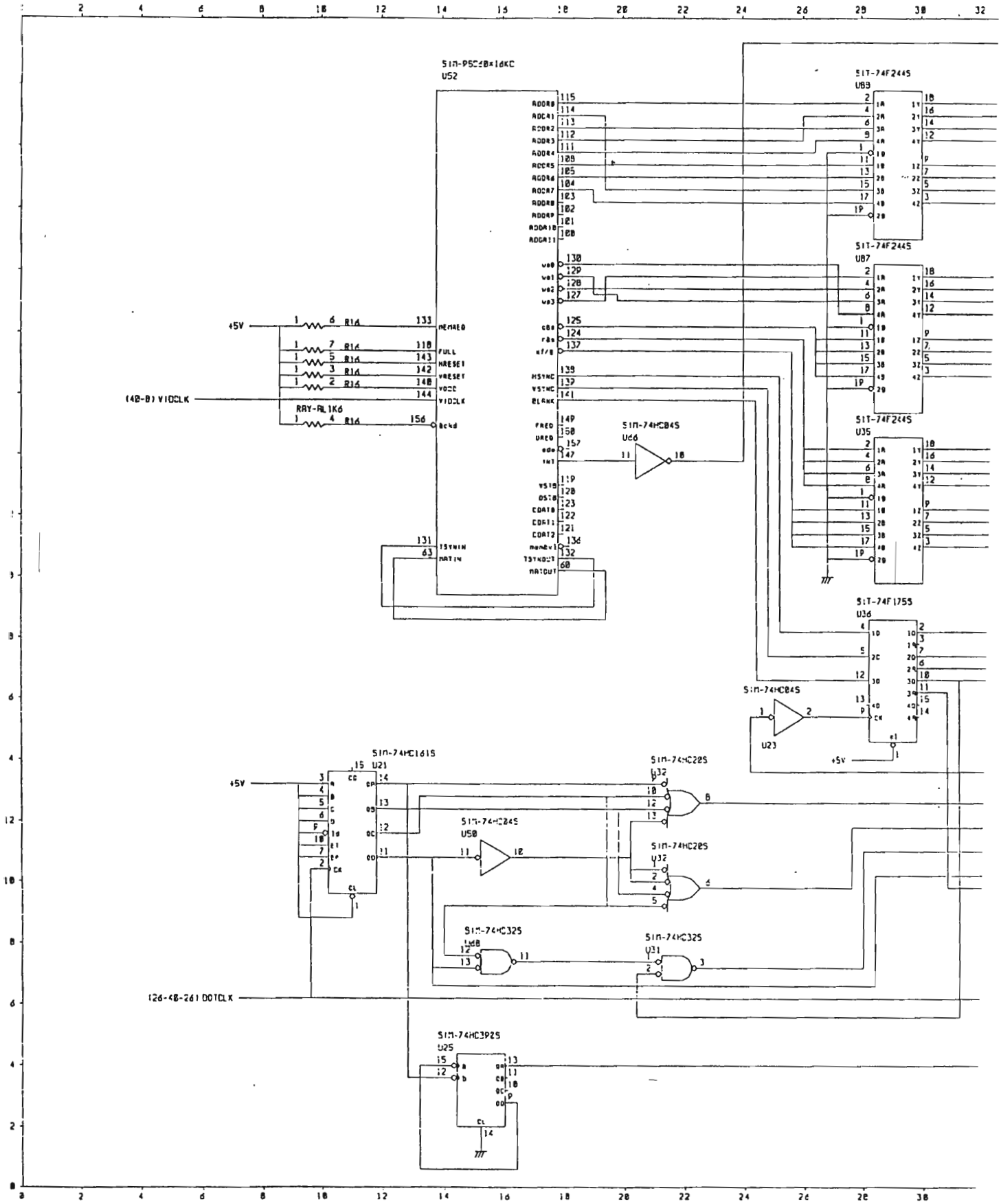
SIM-95C08x16KC
U52
SIT-74F244S
U89
U87
U35
SIT-74F175S
U36
SIM-74HC84S
U66
U23
SIM-74HC161S
U21
SIM-74HC20S
U32
U50
SIM-74HC32S
U31
SIM-74HC39S
U25
+5V
(40-8) VIDCLK
126-40-261 DOTCLK
RAY-RL1K6
R14

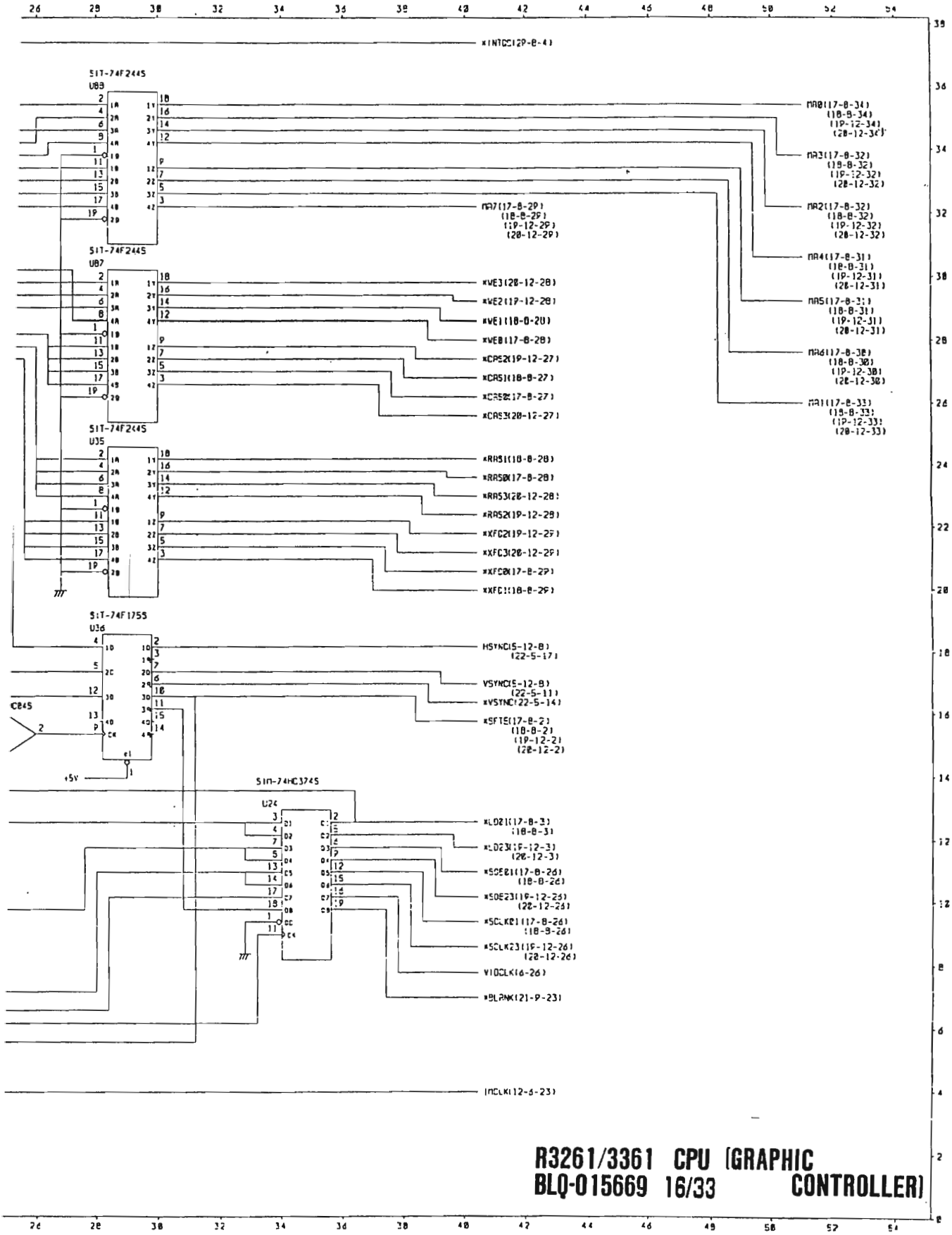

R3261/3361 CPU (GRAPHIC CONTROLLER)
BLQ-015669 16/33

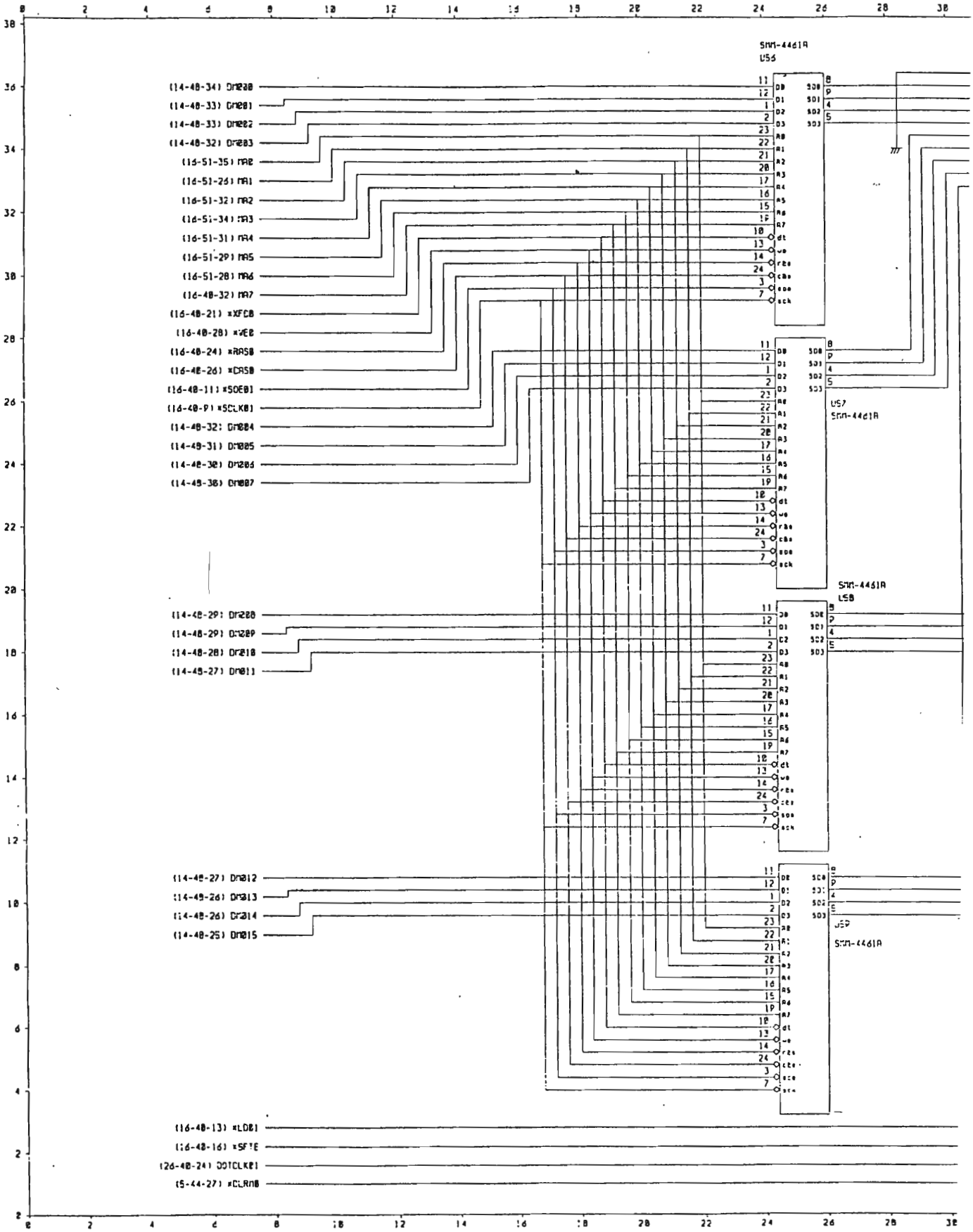
SRM-4461A
U56
U57
SRM-4461A
SRM-4461A
U58
U59
SRM-4461A
(14-48-34) DM208
(14-48-33) DM201
(14-48-33) DM202
(14-48-32) DM203
(16-51-35) MA0
(16-51-26) MA1
(16-51-32) MA2
(16-51-34) MA3
(16-51-31) MA4
(16-51-29) MA5
(16-51-28) MA6
(16-48-32) MA7
(16-48-21) *XFCS
(16-48-28) *WE0
(16-48-24) *RAS0
(16-48-26) *CAS0
(16-48-11) *SOE01
(16-48-9) *SCLK01
(14-48-32) DM004
(14-49-31) DM005
(14-48-30) DM006
(14-49-30) DM007
(14-48-29) DM208
(14-48-29) DM209
(14-48-28) DM210
(14-49-27) DM011
(14-49-27) DM012
(14-49-26) DM013
(14-48-26) DM014
(14-48-25) DM015
(16-48-13) *LDB1
(16-48-16) *SFTE
(26-48-24) DOTCLK01
(5-44-27) *CLRM0

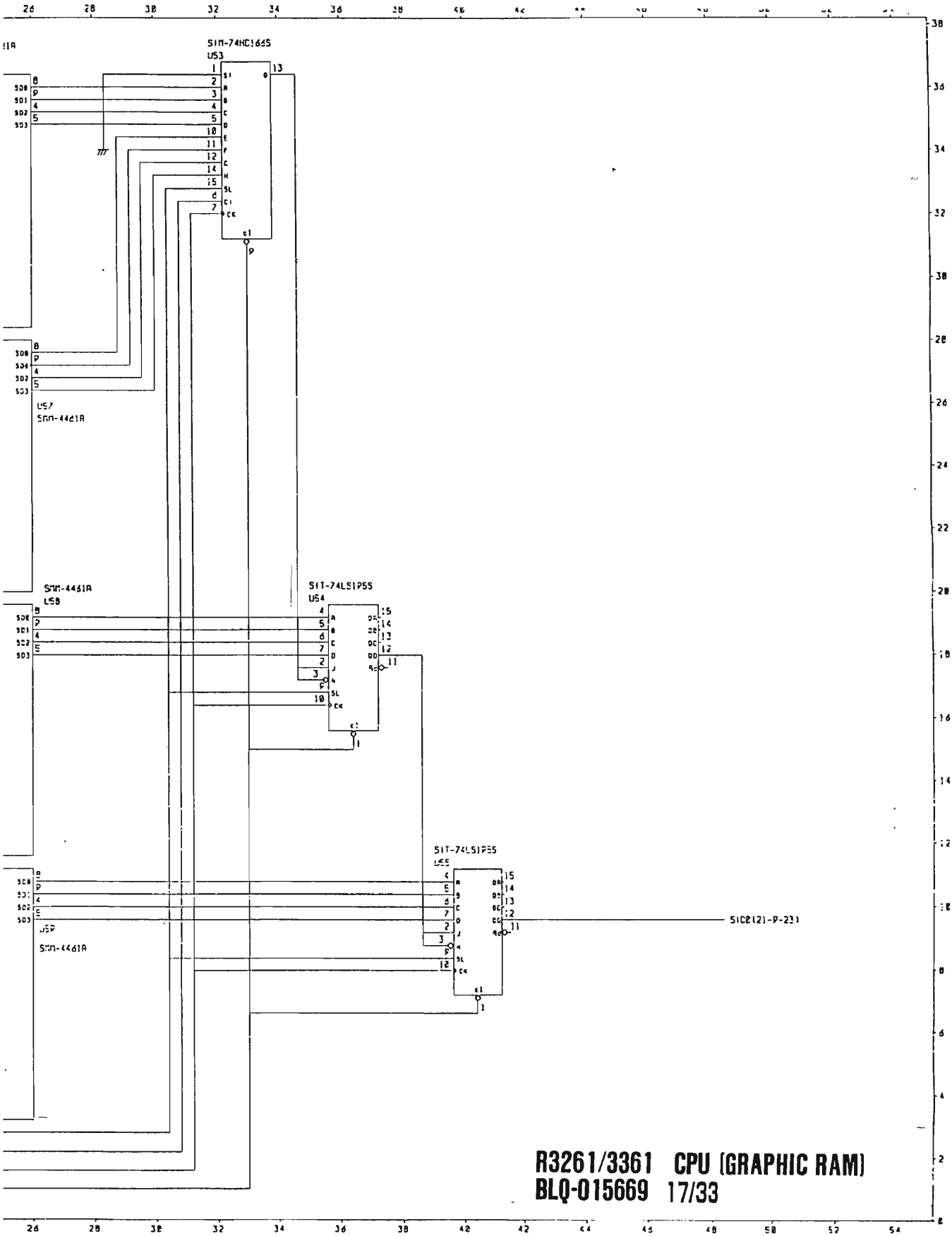

R3261/3361 CPU (GRAPHIC RAM)
BLQ-015669 17/33

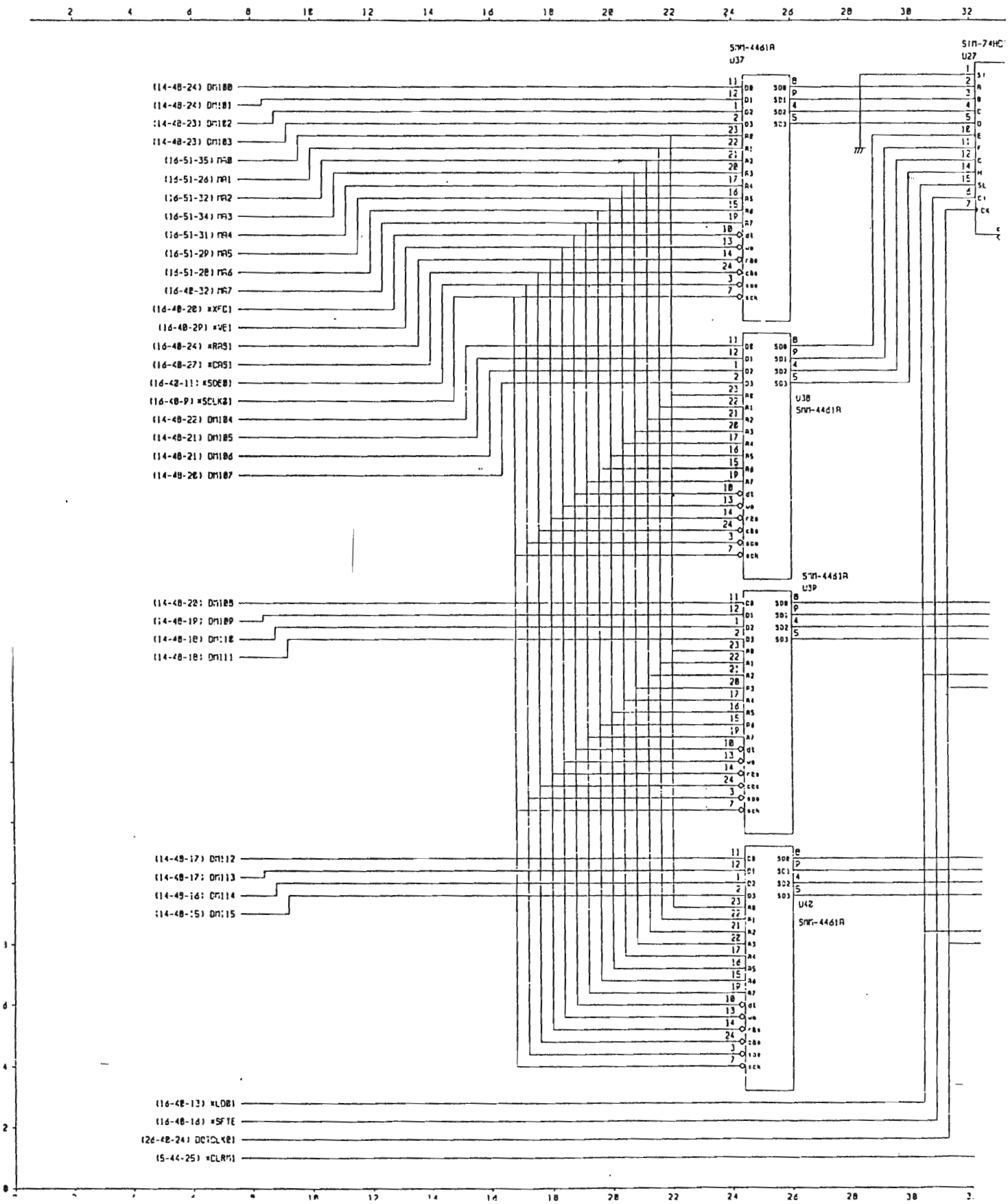
SMM-4461A
U37
SMM-74HC
U27
(14-48-24) DM100
(14-48-24) DM101
(14-48-23) DM102
(14-48-23) DM103
(16-51-35) MA0
(16-51-26) MA1
(16-51-32) MA2
(16-51-34) MA3
(16-51-31) MA4
(16-51-29) MA5
(16-51-28) MA6
(16-48-32) MA7
(16-48-28) *XFC1
(16-40-29) *WE1
(16-48-24) *RAS1
(16-48-27) *CAS1
(16-48-11) *SOE0
(16-40-9) *SCLK0
(14-48-22) DM104
(14-48-21) DM105
(14-48-21) DM106
(14-48-20) DM107
U38
SMM-4461A
SMM-4461A
U39
(14-48-20) DM108
(14-48-19) DM109
(14-48-18) DM110
(14-48-18) DM111
(14-48-17) DM112
(14-48-17) DM113
(14-48-16) DM114
(14-48-15) DM115
U42
SMM-4461A
(16-48-13) *LOD1
(16-48-16) *SFTE
(26-48-24) DOTCLK0
(5-44-25) *CLRM1

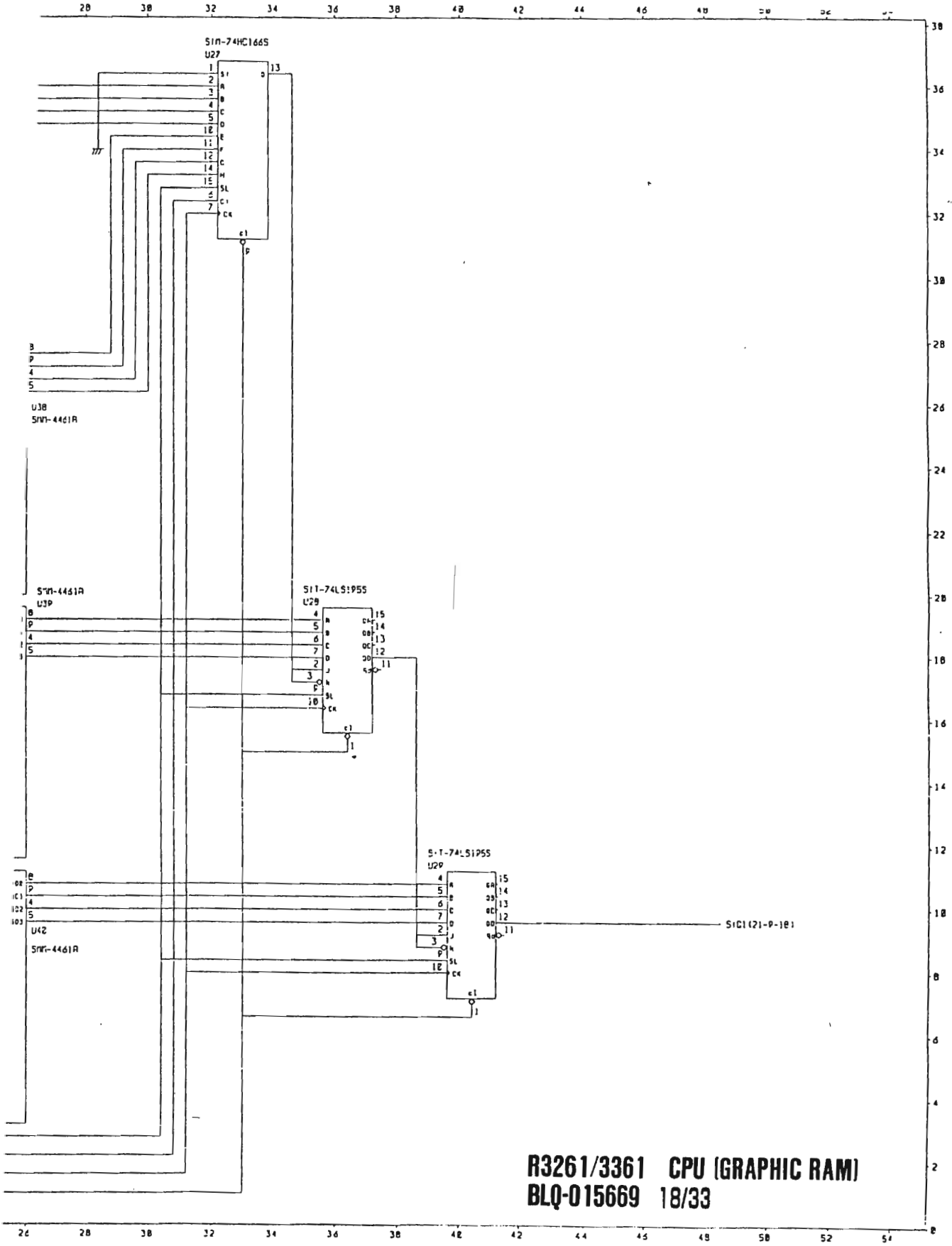

R3261/3361 CPU (GRAPHIC RAM)
BLQ-015669 18/33

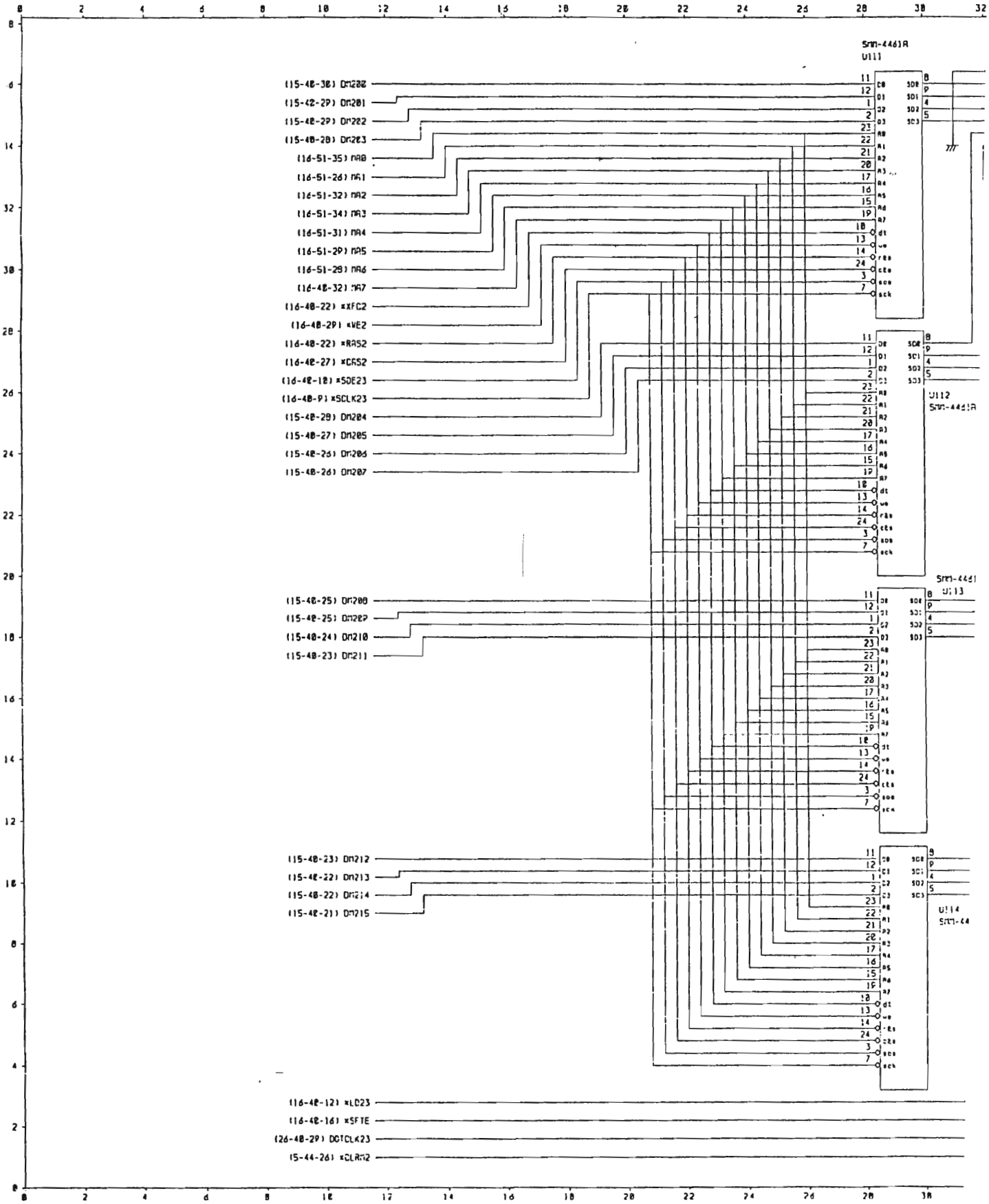
SRM-4461R
U111
U112
SRM-4461R
U113
U114
(15-40-30) DM200
(15-42-29) DM201
(15-40-29) DM202
(15-40-28) DM203
(16-51-35) MA0
(16-51-26) MA1
(16-51-32) MA2
(16-51-34) MA3
(16-51-31) MA4
(16-51-29) MA5
(16-51-28) MA6
(16-40-32) MA7
(16-40-22) *XFC2
(16-40-29) *WE2
(16-40-22) *RAS2
(16-40-27) *CAS2
(16-40-18) *SOE23
(16-40-9) *SCLK23
(15-40-28) DM204
(15-40-27) DM205
(15-40-26) DM206
(15-40-26) DM207
(15-40-25) DM208
(15-40-25) DM209
(15-40-24) DM210
(15-40-23) DM211
(15-40-23) DM212
(15-40-22) DM213
(15-40-22) DM214
(15-40-21) DM215
(16-40-12) *LD23
(16-40-16) *SFTE
(26-40-29) DOTCLK23
(5-44-26) *CLRM2

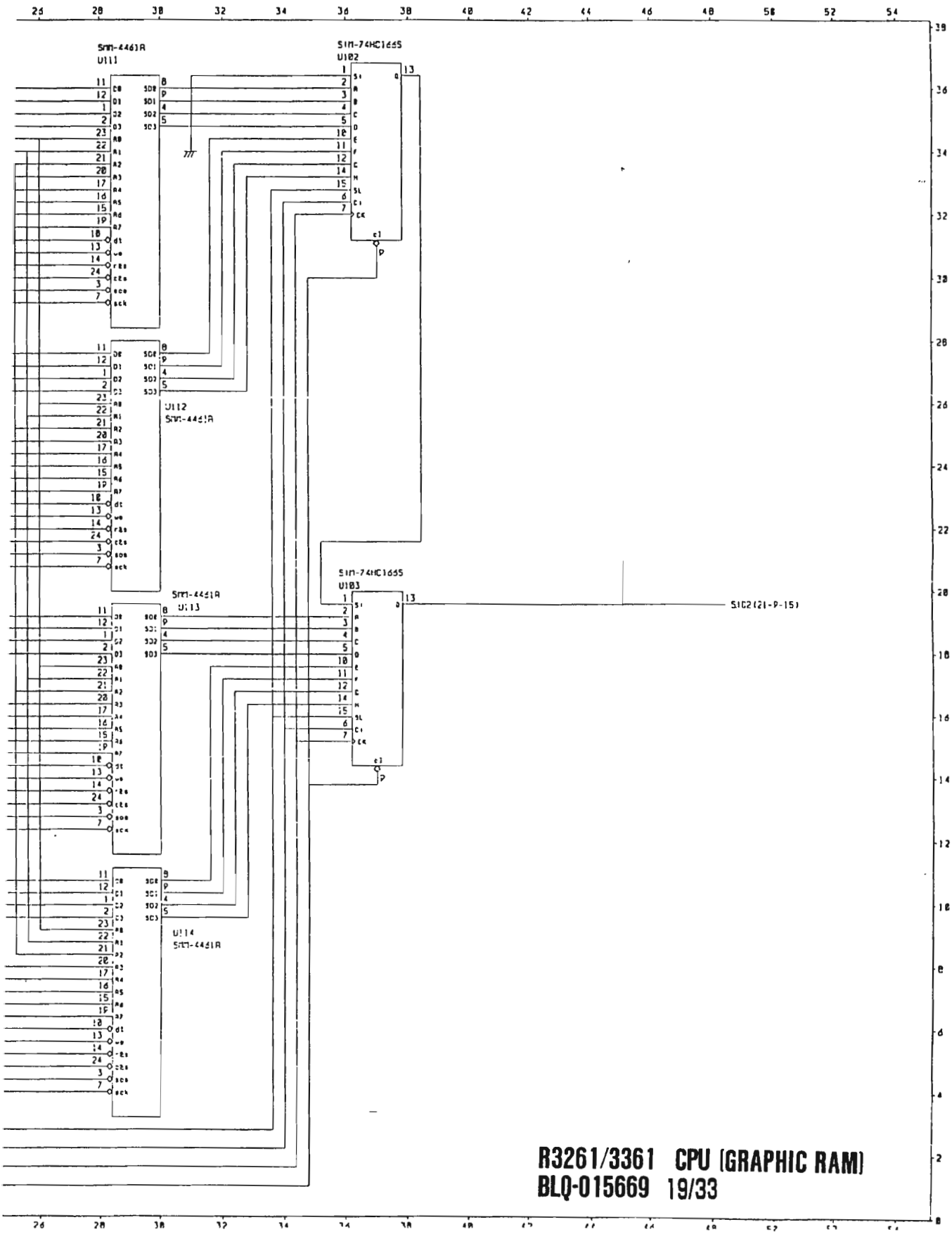

R3261/3361 CPU (GRAPHIC RAM)
BLQ-015669 19/33

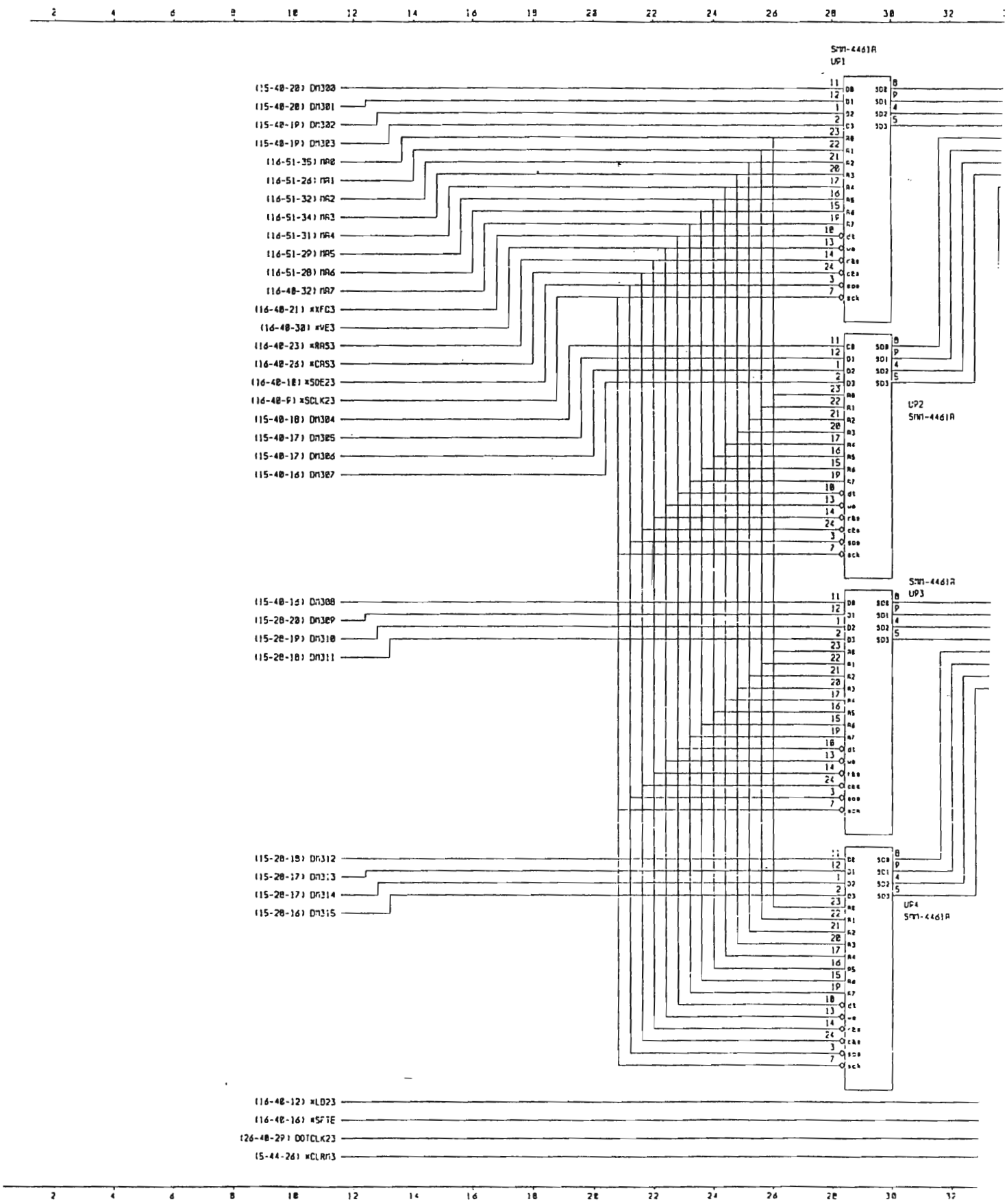
2 4 6 8 10 12 14 16 18 20 22 24 26 28 30 32
SMM-4461A
UP1
(15-40-20) DM300
(15-40-20) DM301
(15-40-19) DM302
(15-40-19) DM303
(16-51-35) MA0
(16-51-26) MA1
(16-51-32) MA2
(16-51-34) MA3
(16-51-31) MA4
(16-51-29) MA5
(16-51-28) MA6
(16-40-32) MA7
(16-40-21) *XFC3
(16-40-30) *VE3
(16-40-23) *RAS3
(16-40-26) *CAS3
(16-40-18) *SOE23
(16-40-F) *SCLK23
(15-40-18) DM304
(15-40-17) DM305
(15-40-17) DM306
(15-40-16) DM307
UP2
SMM-4461A
(15-40-16) DM308
(15-20-20) DM309
(15-20-19) DM310
(15-20-18) DM311
SMM-4461A
UP3
(15-20-15) DM312
(15-20-17) DM313
(15-20-17) DM314
(15-20-16) DM315
UP4
SMM-4461A
(16-40-12) *LD23
(16-40-16) *SFTE
(26-40-29) DOTCLK23
(5-44-26) *CLRM3
2 4 6 8 10 12 14 16 18 20 22 24 26 28 30 32

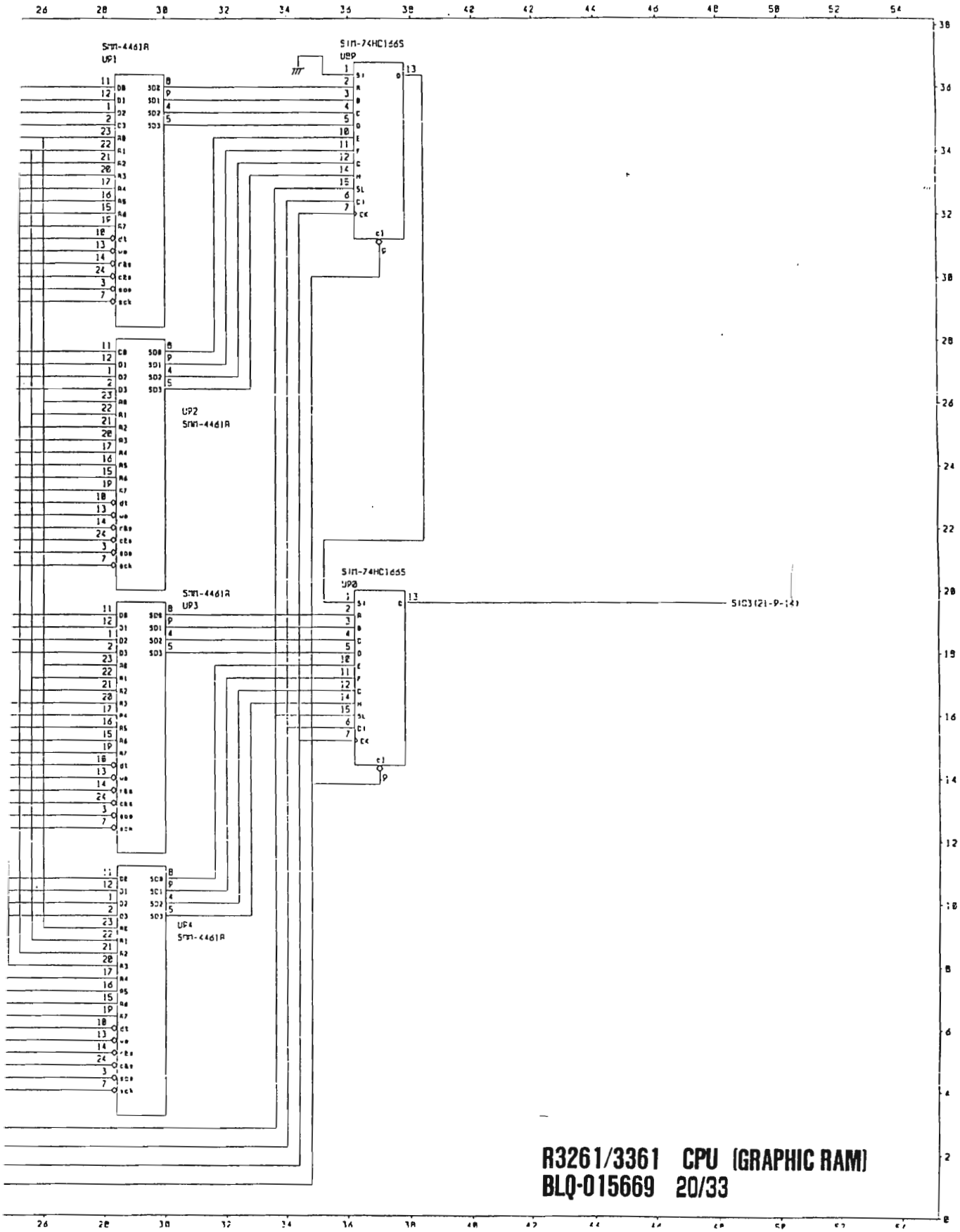

R3261/3361 CPU (GRAPHIC RAM)
BLQ-015669 20/33

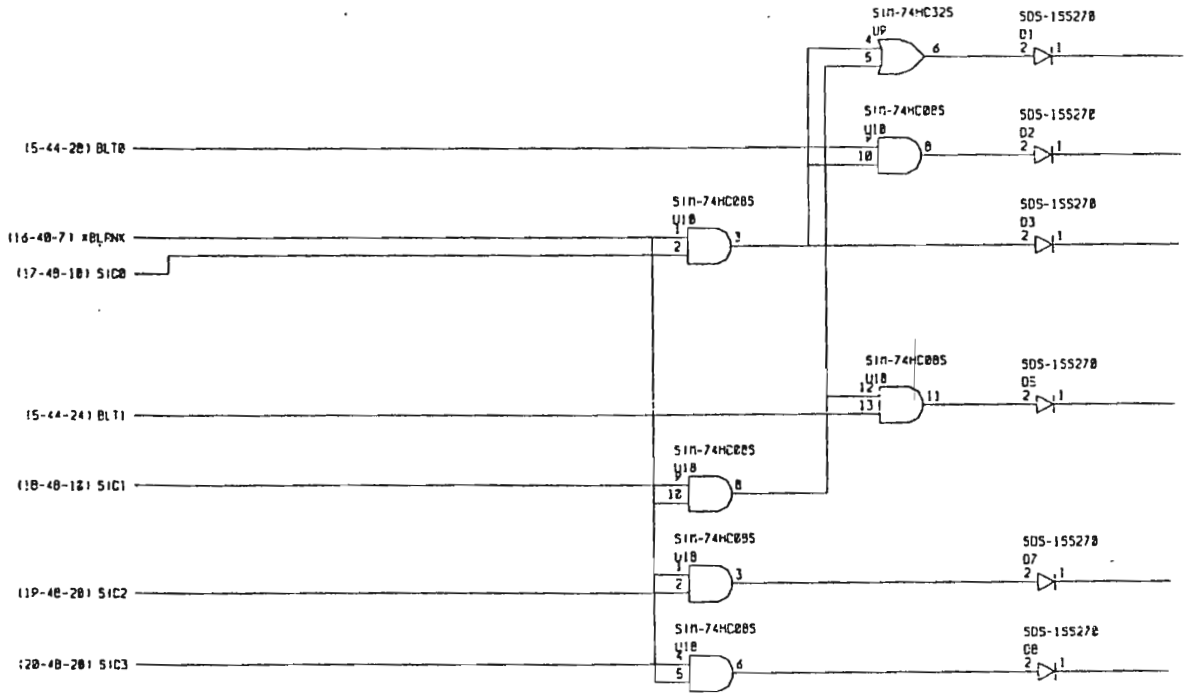
SN-74HC32S
U9
SDS-1SS270
D1
SN-74HC08S
U10
SDS-1SS270
D2
(5-44-20) BLT0
SN-74HC08S
U10
SDS-1SS270
D3
(16-40-7) xBLANK
(17-40-10) SIC0
SN-74HC08S
U10
SDS-1SS270
D5
(5-44-24) BLT1
SN-74HC08S
U10
(18-40-13) SIC1
SN-74HC08S
U10
SDS-1SS270
D7
(19-40-20) SIC2
SN-74HC08S
U10
SDS-1SS270
D8
(20-40-20) SIC3

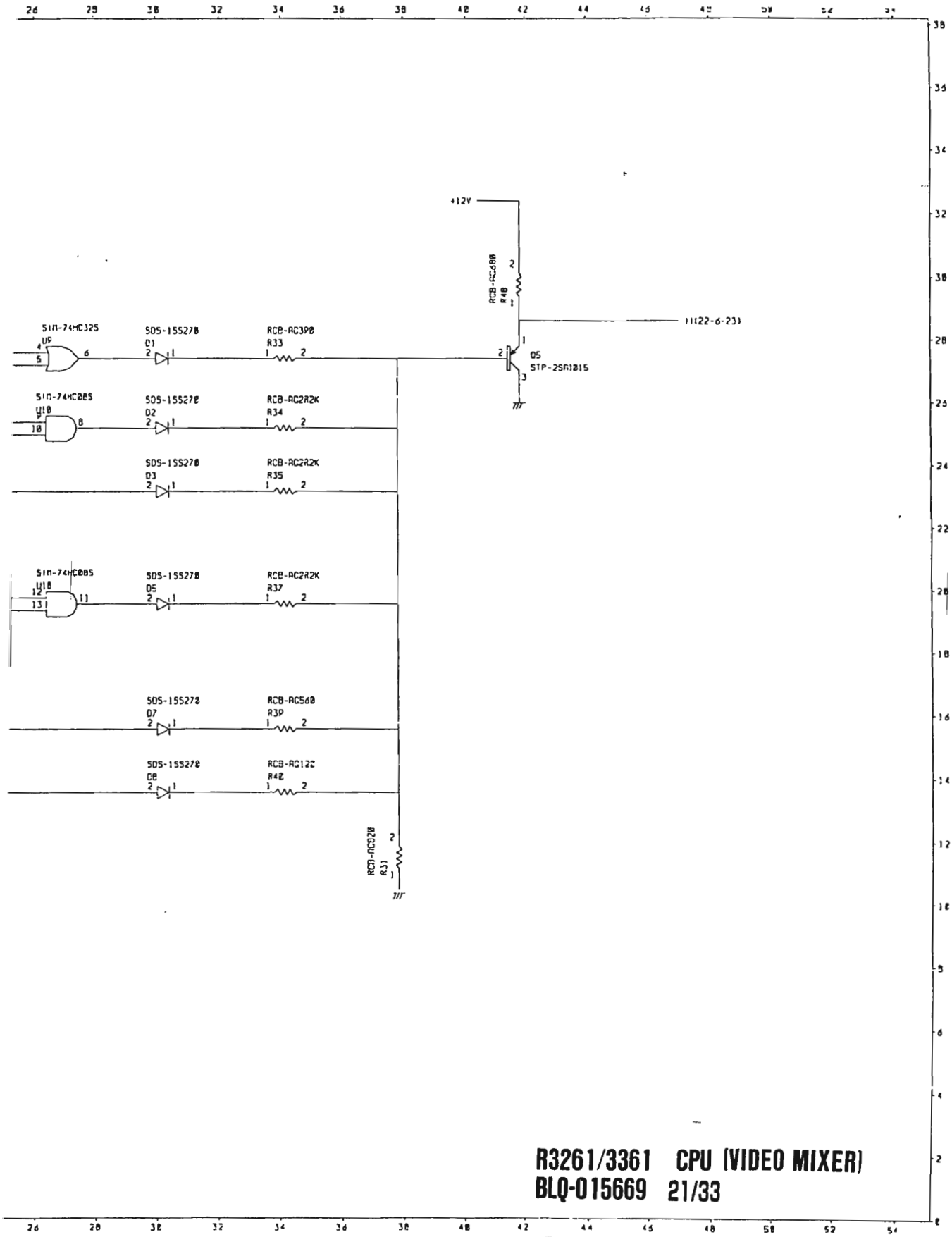

R3261/3361 CPU (VIDEO MIXER)
BLQ-015669 21/33

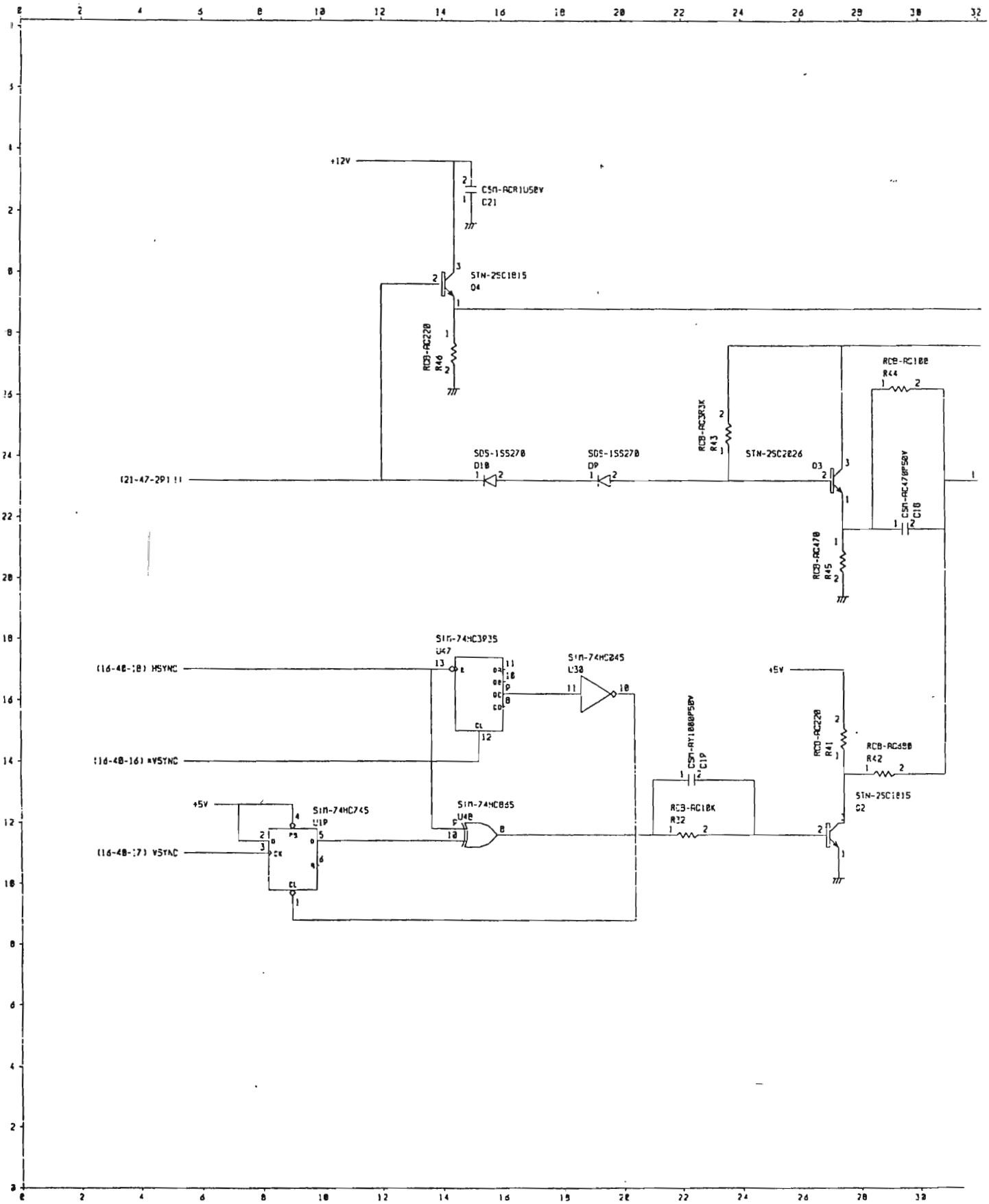
+12V
C5M-RCR1U50V
C21
STN-2SC1815
Q4
RCB-RC220
R46
RCB-RC3R3K
R43
RCB-RC100
R44
STN-2SC2026
Q3
C5M-RC470P50V
C10
RCB-RC470
R45
SDS-1SS270
D18
SDS-1SS270
DP
(21-47-2P1 !!
SIM-74HC393S
U47
SIM-74HC045
U30
(16-48-18) HSYNC
(16-48-16) HVSYNC
+5V
C5M-RY1000P50V
C19
RCB-RC10K
R32
RCB-RC220
R41
RCB-RC680
R42
STN-2SC1815
Q2
SIM-74HC745
U19
SIM-74HC065
U48
(16-48-17) VSYNC

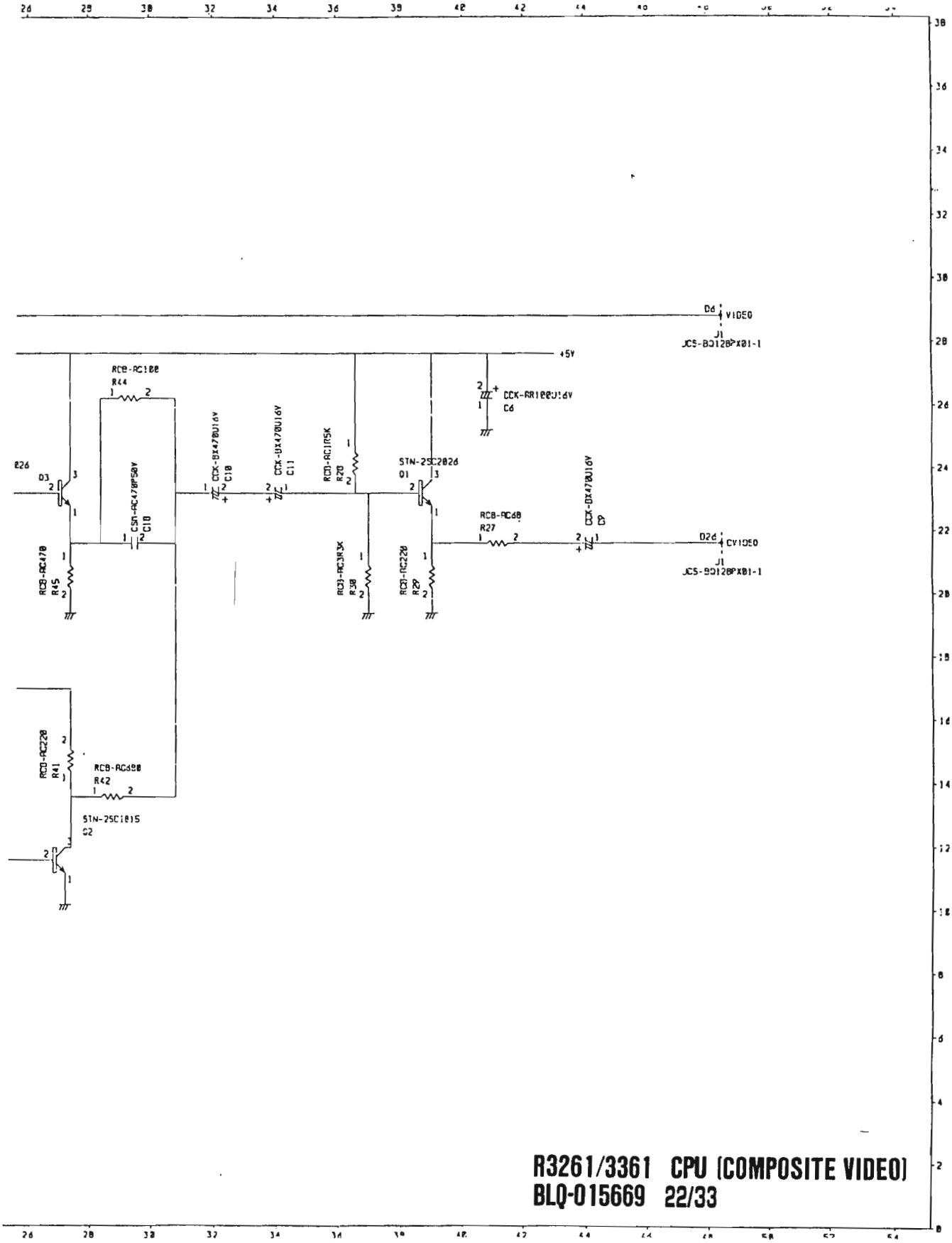

R3261/3361 CPU (COMPOSITE VIDEO)
BLQ-015669 22/33

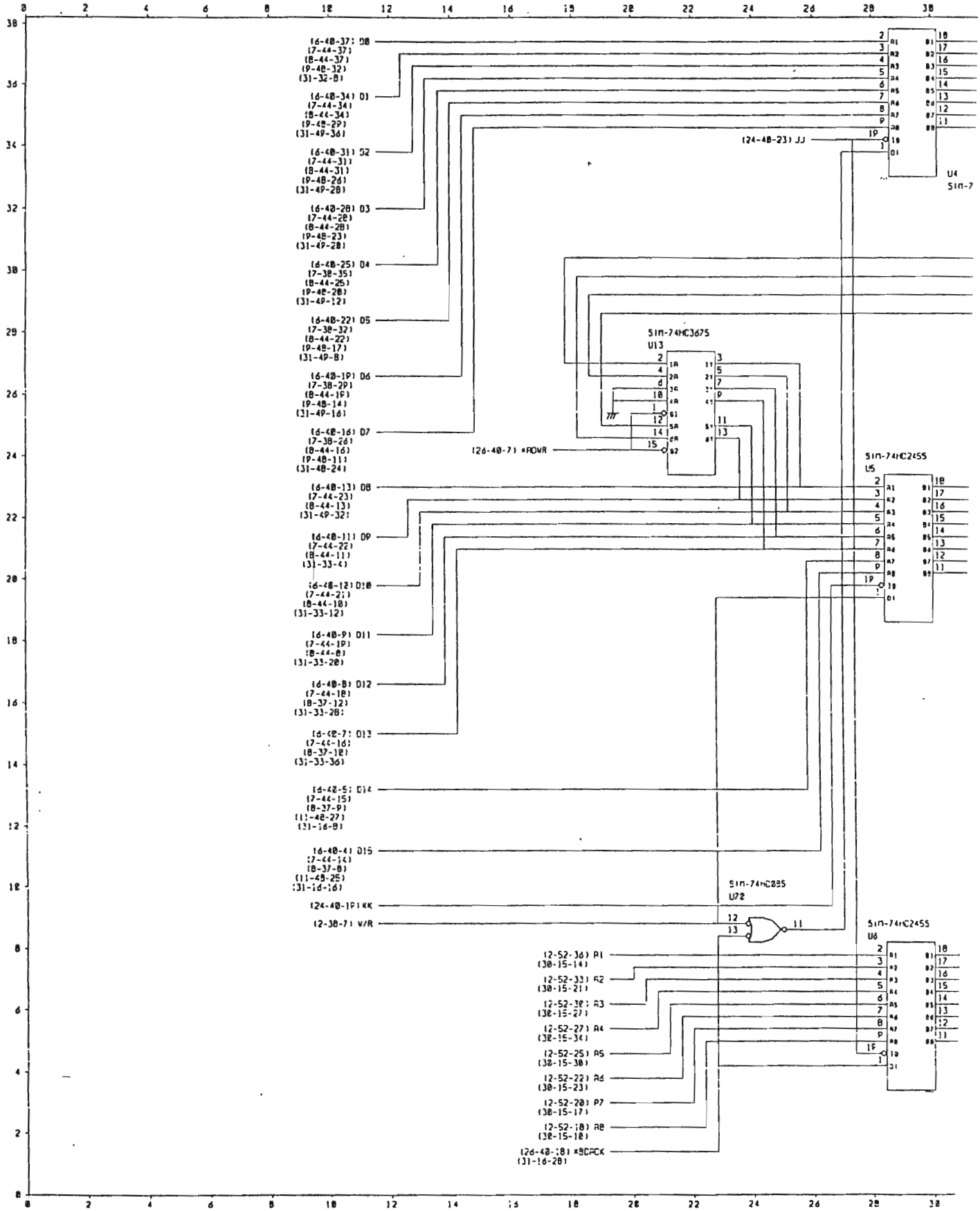
(6-40-37) D0
(7-44-37)
(8-44-37)
(9-48-32)
(31-32-8)
(6-40-34) D1
(7-44-34)
(8-44-34)
(9-48-29)
(31-49-36)
(6-40-31) D2
(7-44-31)
(8-44-31)
(9-48-26)
(31-49-28)
(6-40-28) D3
(7-44-28)
(8-44-28)
(9-48-23)
(31-49-28)
(6-40-25) D4
(7-38-35)
(8-44-25)
(9-48-20)
(31-49-12)
(6-40-22) D5
(7-38-32)
(8-44-22)
(9-48-17)
(31-49-8)
(6-40-19) D6
(7-38-29)
(8-44-19)
(9-48-14)
(31-49-16)
(6-40-16) D7
(7-38-26)
(8-44-16)
(9-48-11)
(31-48-24)
(6-40-13) D8
(7-44-23)
(8-44-13)
(31-49-32)
(6-40-11) D9
(7-44-22)
(8-44-11)
(31-33-4)
(6-40-12) D10
(7-44-21)
(8-44-10)
(31-33-12)
(6-40-9) D11
(7-44-19)
(8-44-8)
(31-33-20)
(6-40-8) D12
(7-44-18)
(8-37-12)
(31-33-28)
(6-40-7) D13
(7-44-16)
(8-37-10)
(31-33-36)
(6-42-5) D14
(7-44-15)
(8-37-9)
(11-48-27)
(31-16-9)
(6-40-4) D15
(7-44-14)
(8-37-8)
(11-48-25)
(31-16-16)
(24-40-19) KK
(2-38-7) W/R
(24-40-23) JJ
U4
SIM-7
SIM-74HC3675
U13
(26-40-7) *RDWR
SIM-74HC245S
U5
SIM-74HC285
U72
SIM-74HC245S
U6
(2-52-36) A1
(30-15-14)
(2-52-33) A2
(30-15-21)
(2-52-30) A3
(30-15-27)
(2-52-27) A4
(30-15-34)
(2-52-25) A5
(30-15-38)
(2-52-22) A6
(30-15-23)
(2-52-20) A7
(30-15-17)
(2-52-18) A8
(30-15-10)
(26-40-18) *BCRCK
(31-16-28)

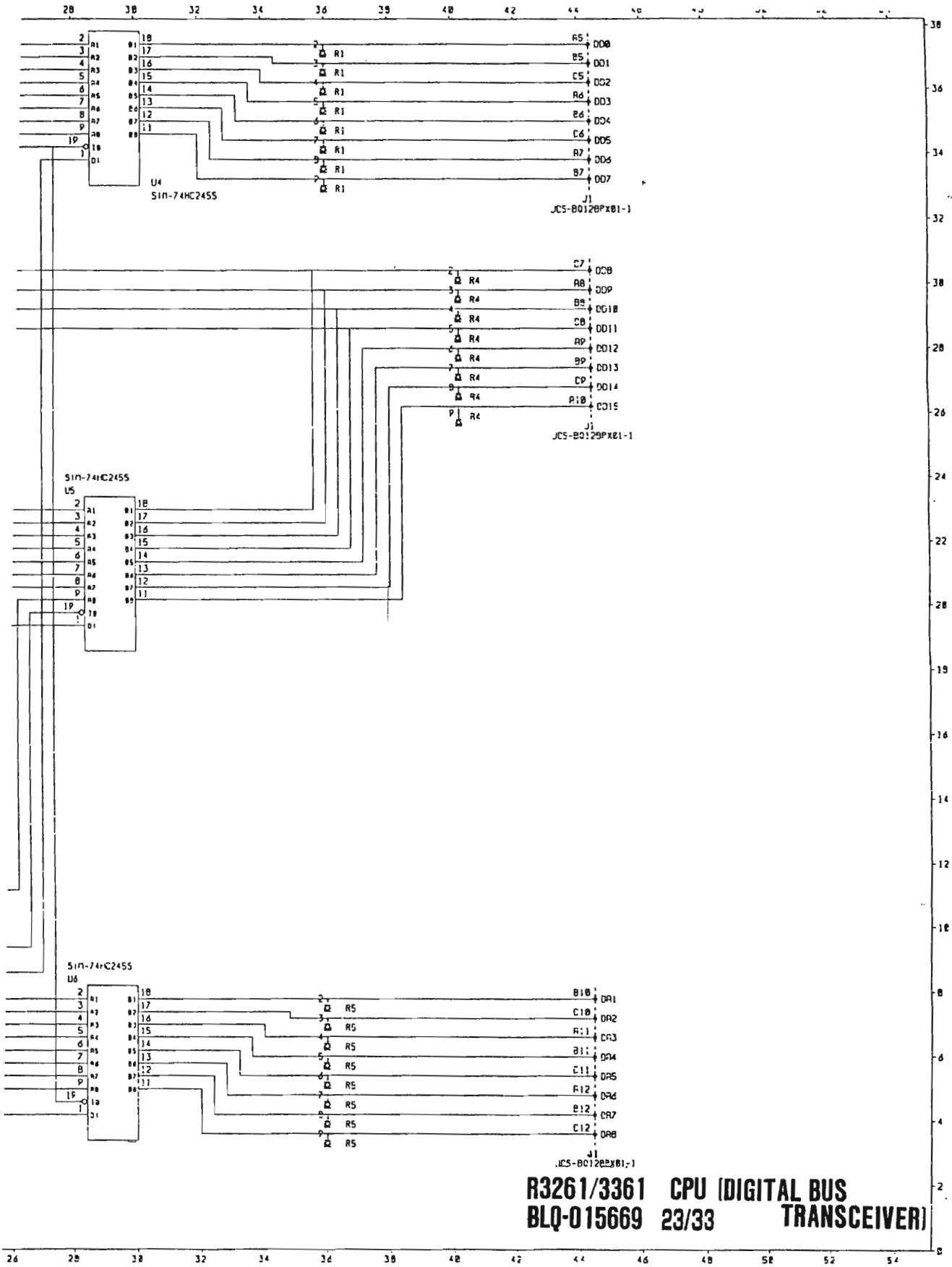

R3261/3361 CPU (DIGITAL BUS TRANSCEIVER)
BLQ-015669 23/33

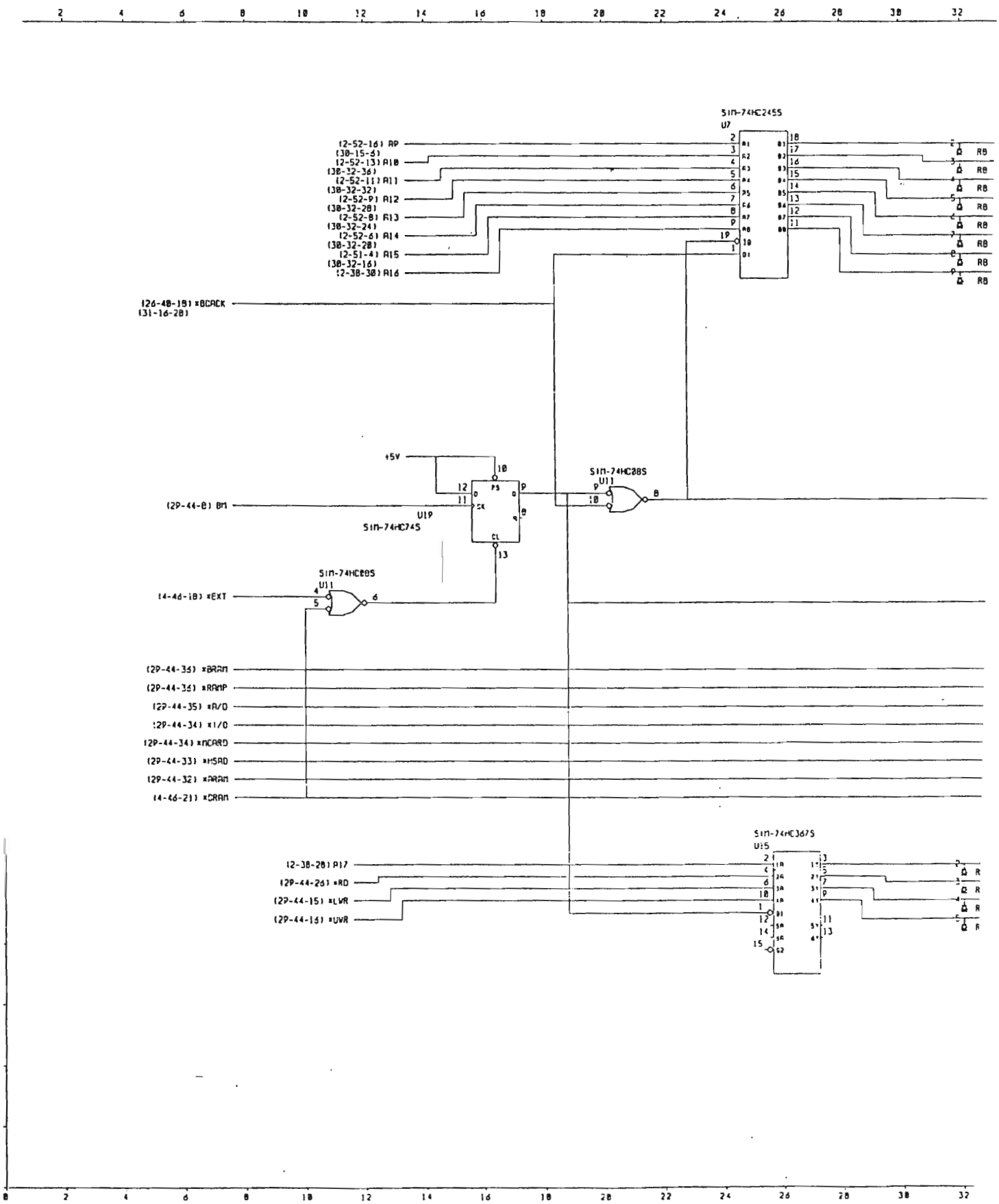
SIM-74HC245S
U7
(2-52-16) A0
(30-15-6)
(2-52-13) A10
(30-32-36)
(2-52-11) A11
(30-32-32)
(2-52-9) A12
(30-32-28)
(2-52-8) A13
(30-32-24)
(2-52-6) A14
(30-32-20)
(2-51-4) A15
(30-32-16)
(2-38-30) A16
(26-40-18) *BCACK
(31-16-28)
+5V
(2P-44-8) BM
U19
SIM-74HC74S
SIM-74HC08S
U11
(4-46-18) *EXT
(2P-44-36) *BRAM
(2P-44-36) *RAMP
(2P-44-35) *A/D
(2P-44-34) *I/O
(2P-44-34) *DCARD
(2P-44-33) *HSAD
(2P-44-32) *ARAM
(4-46-21) *CRAM
SIM-74HC367S
U15
(2-38-28) A17
(2P-44-26) *RD
(2P-44-15) *LWR
(2P-44-16) *UWR

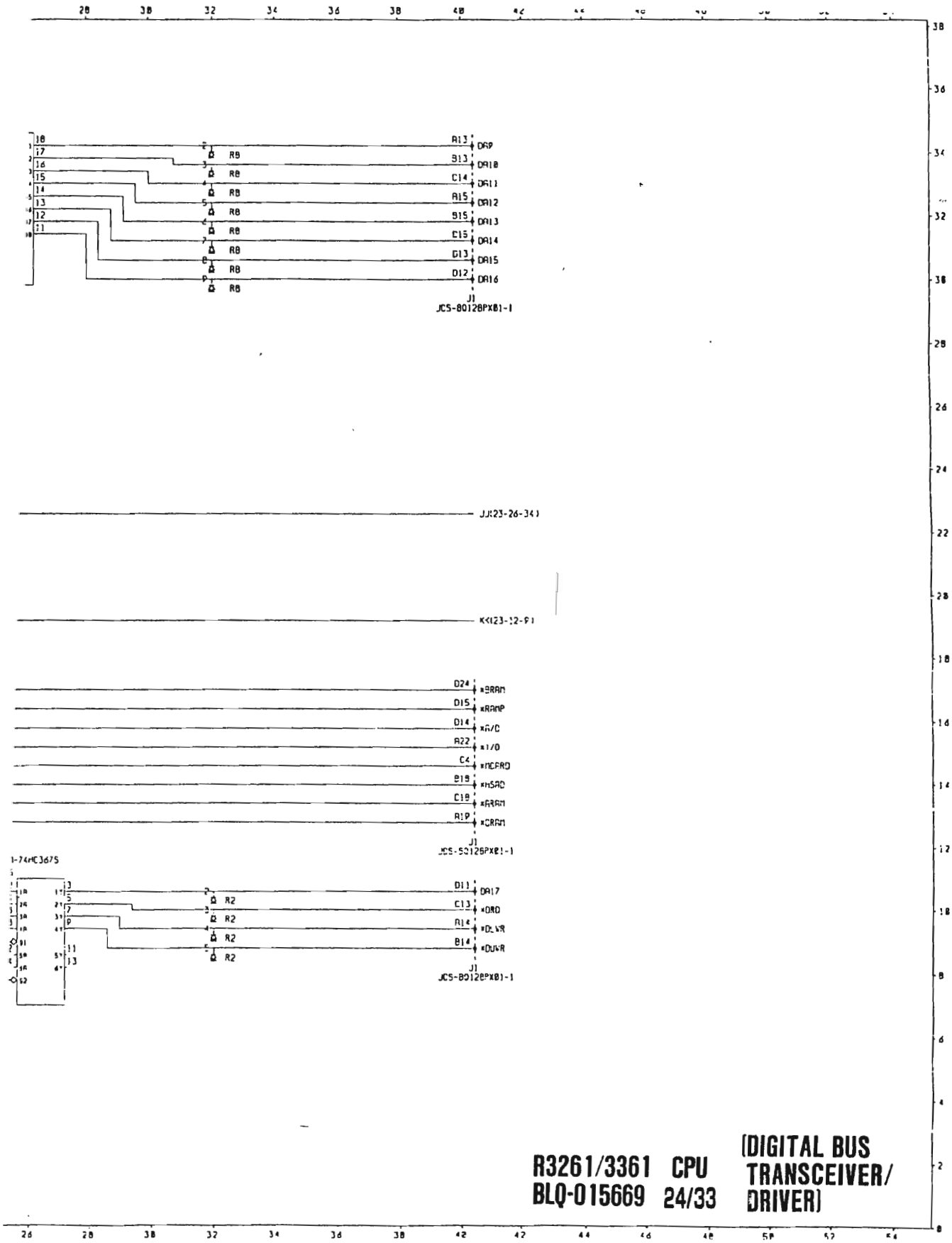

R3261/3361 CPU (DIGITAL BUS TRANSCEIVER/ DRIVER)
BLQ-015669 24/33

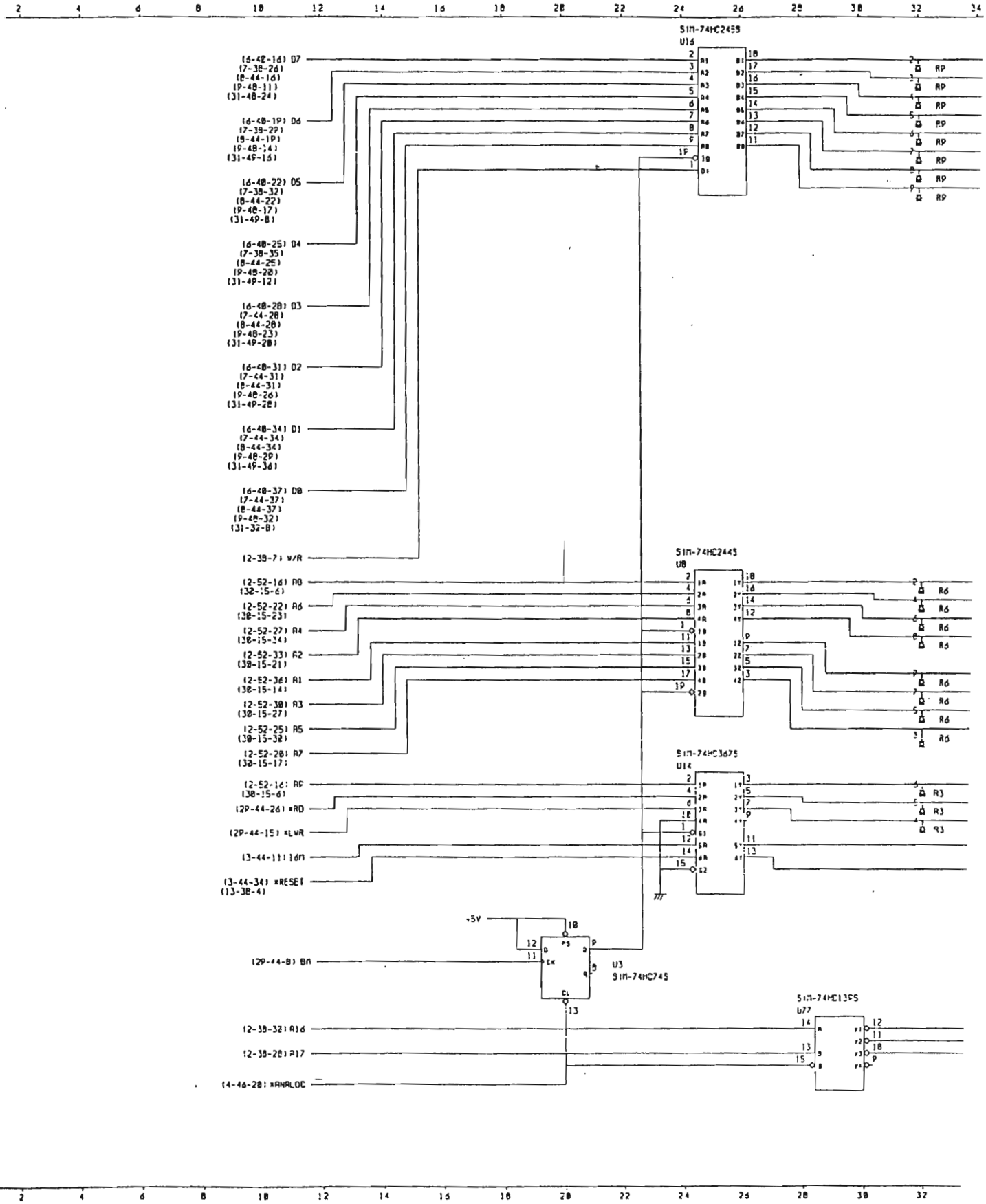
SIM-74HC245S
U16
(6-48-16) D7
(7-38-26)
(8-44-16)
(9-48-11)
(31-48-24)
(6-48-19) D6
(7-38-29)
(8-44-19)
(9-48-14)
(31-49-16)
(6-48-22) D5
(7-38-32)
(8-44-22)
(9-48-17)
(31-49-8)
(6-48-25) D4
(7-38-35)
(8-44-25)
(9-48-20)
(31-49-12)
(6-48-28) D3
(7-44-28)
(8-44-28)
(9-48-23)
(31-49-20)
(6-48-31) D2
(7-44-31)
(8-44-31)
(9-48-26)
(31-49-28)
(6-48-34) D1
(7-44-34)
(8-44-34)
(9-48-29)
(31-49-36)
(6-48-37) D0
(7-44-37)
(8-44-37)
(9-48-32)
(31-32-8)
(2-38-7) W/R
RP
SIM-74HC244S
U8
(2-52-16) A0
(30-15-6)
(2-52-22) A6
(30-15-23)
(2-52-27) A4
(30-15-34)
(2-52-33) A2
(30-15-21)
(2-52-36) A1
(30-15-14)
(2-52-30) A3
(30-15-27)
(2-52-25) A5
(30-15-32)
(2-52-20) A7
(30-15-17)
R6
SIM-74HC367S
U14
(2-52-16) A0
(30-15-6)
(29-44-26) *RD
(29-44-15) *LWR
(3-44-11) 16M
(3-44-34) *RESET
(13-38-4)
R3
+5V
(29-44-8) BM
U3
SIM-74HC74S
SIM-74HC138S
U77
(2-38-32) A16
(2-38-28) A17
(4-46-28) *ANALOG

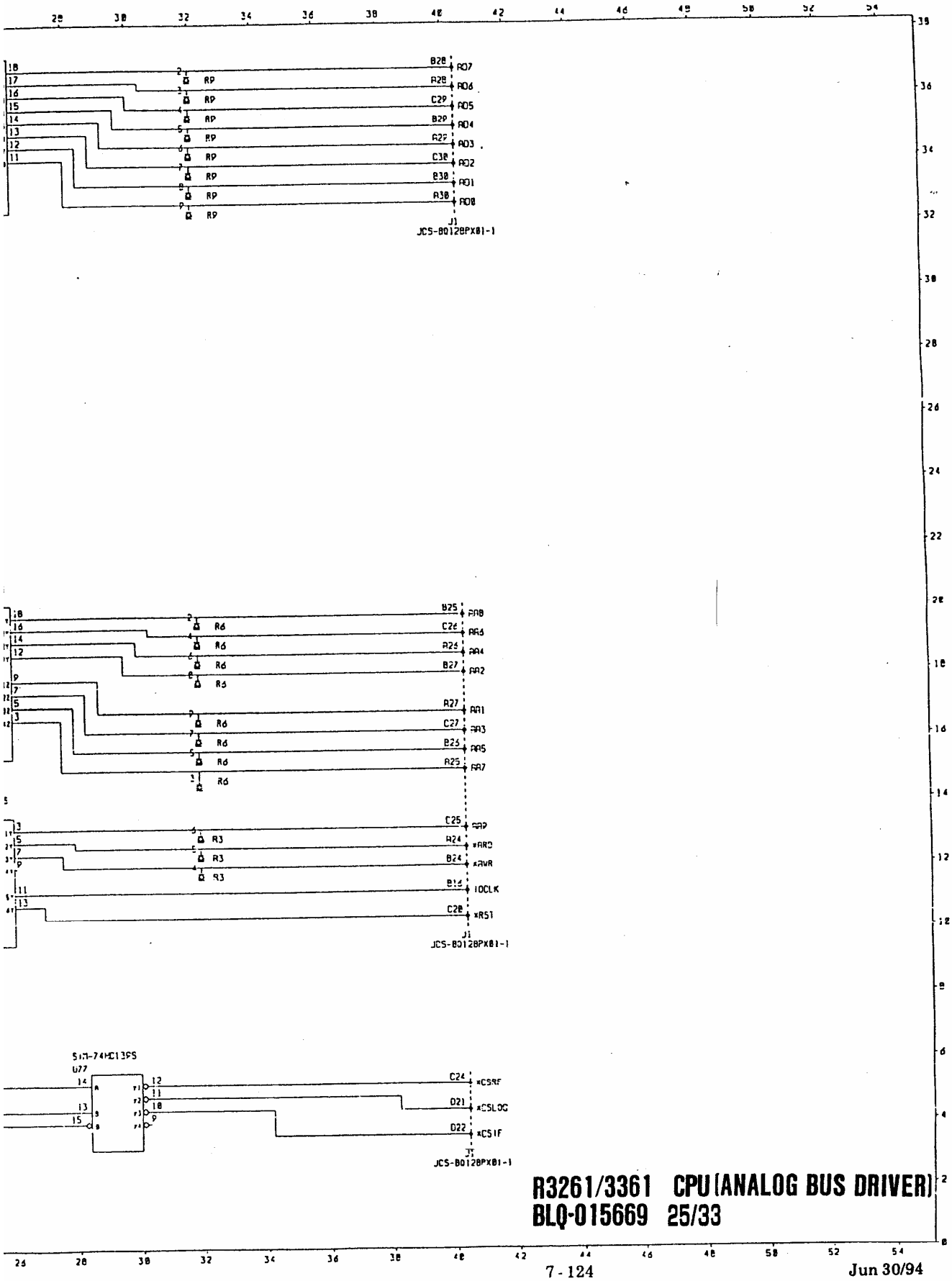

R3261/3361 CPU (ANALOG BUS DRIVER)
BLQ-015669 25/33

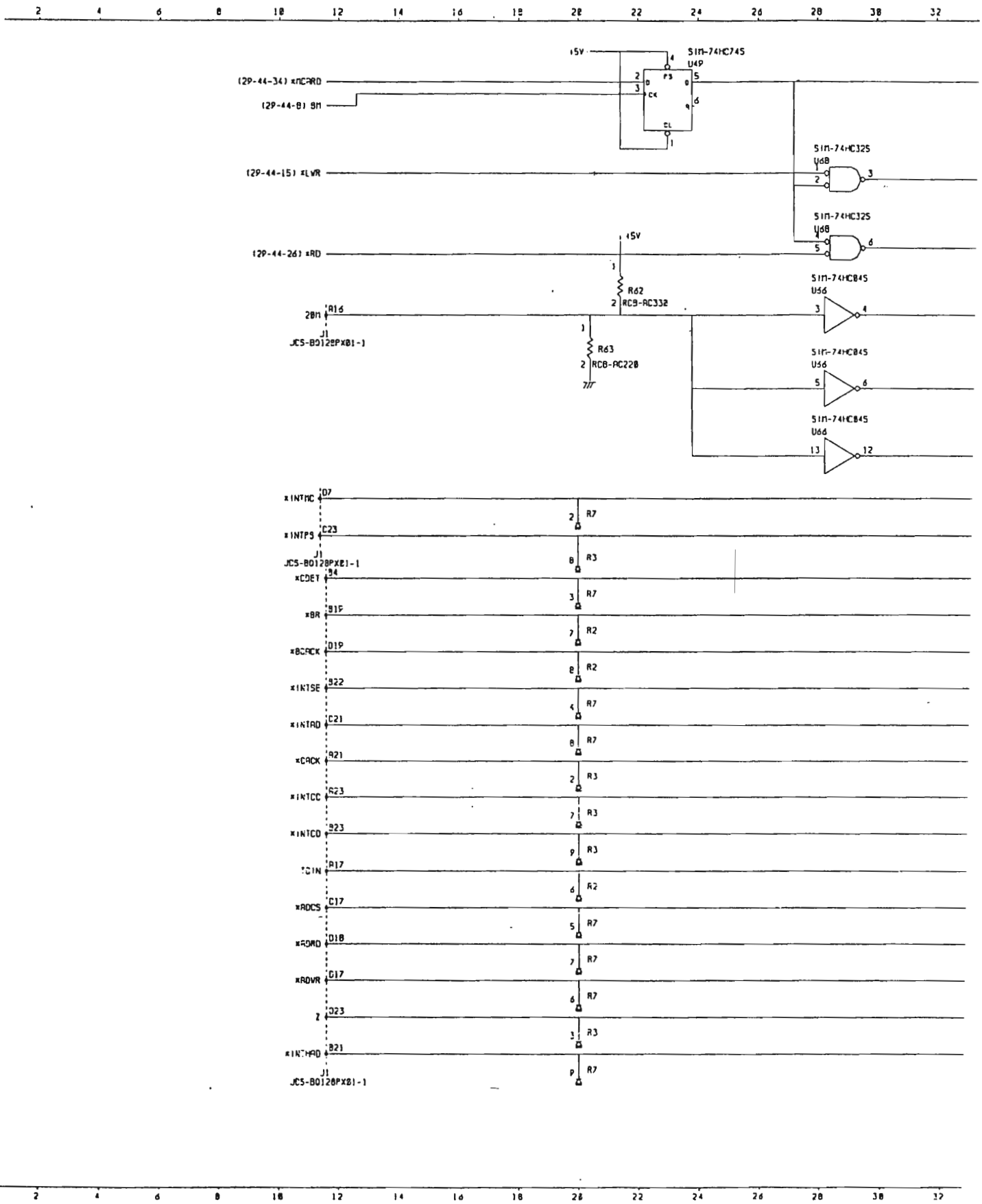
2 4 6 8 10 12 14 16 18 20 22 24 26 28 30 32
+5V
SN-74HC74S
U4P
(29-44-34) xMCARD
(29-44-8) 8M
(29-44-15) xLWR
SN-74HC32S
U68
(29-44-26) xRD
R62
RC8-AC332
R63
RC8-AC220
SN-74HC04S
U56
20M
R16
J1
JCS-B0128PX01-1
xINTMC
D7
xINTPS
C23
xCDET
B4
xBR
B19
xBACK
D19
xINTSE
B22
xINTAD
C21
xCACK
A21
xINTCC
G23
xINTCD
B23
TCIN
R17
xRDCS
C17
xRDRD
D18
xRDWR
C17
Z
D23
xINTHAD
B21
R7
R3
R2
2 4 6 8 10 12 14 16 18 20 22 24 26 28 30 32

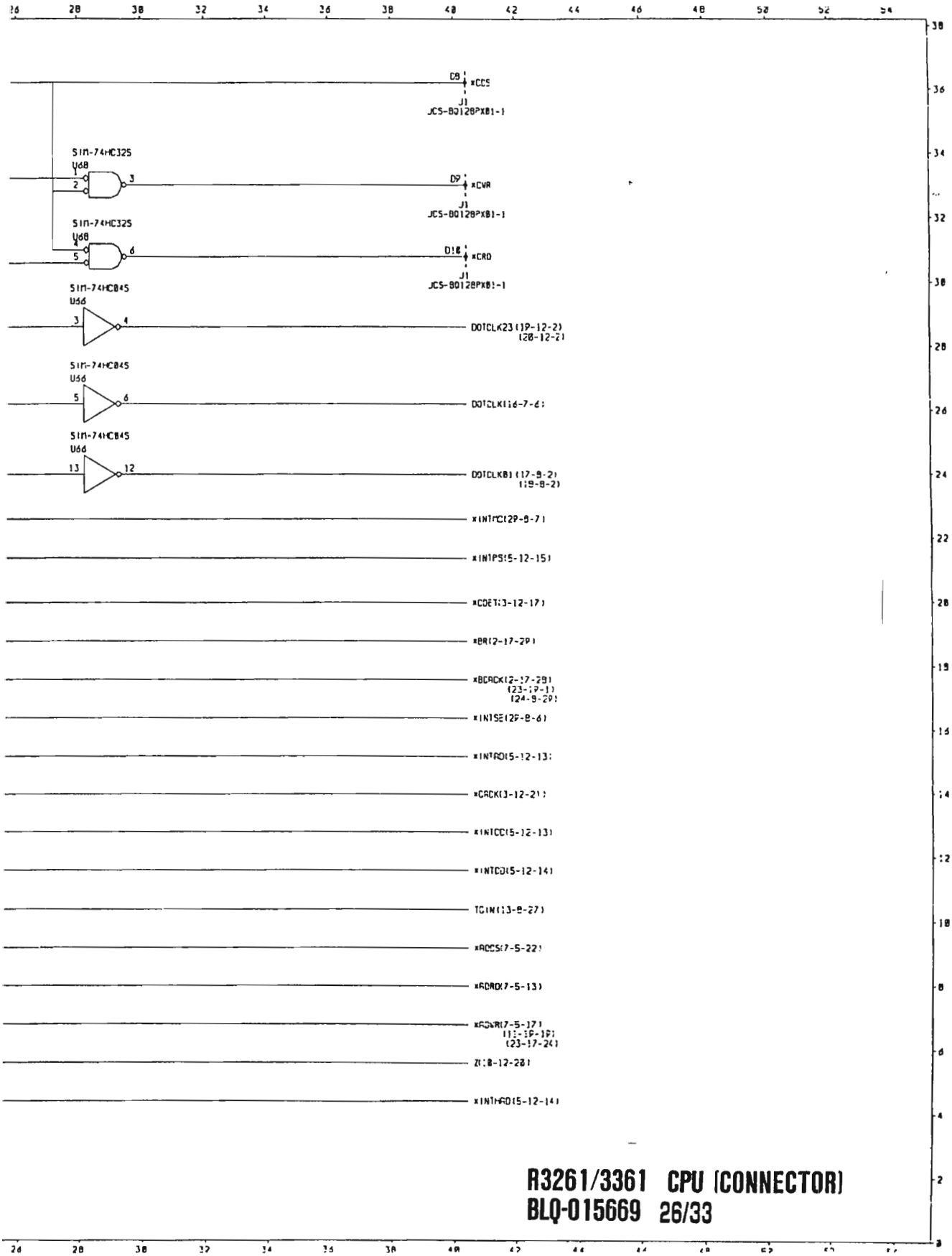

R3261/3361 CPU (CONNECTOR)
BLQ-015669 26/33

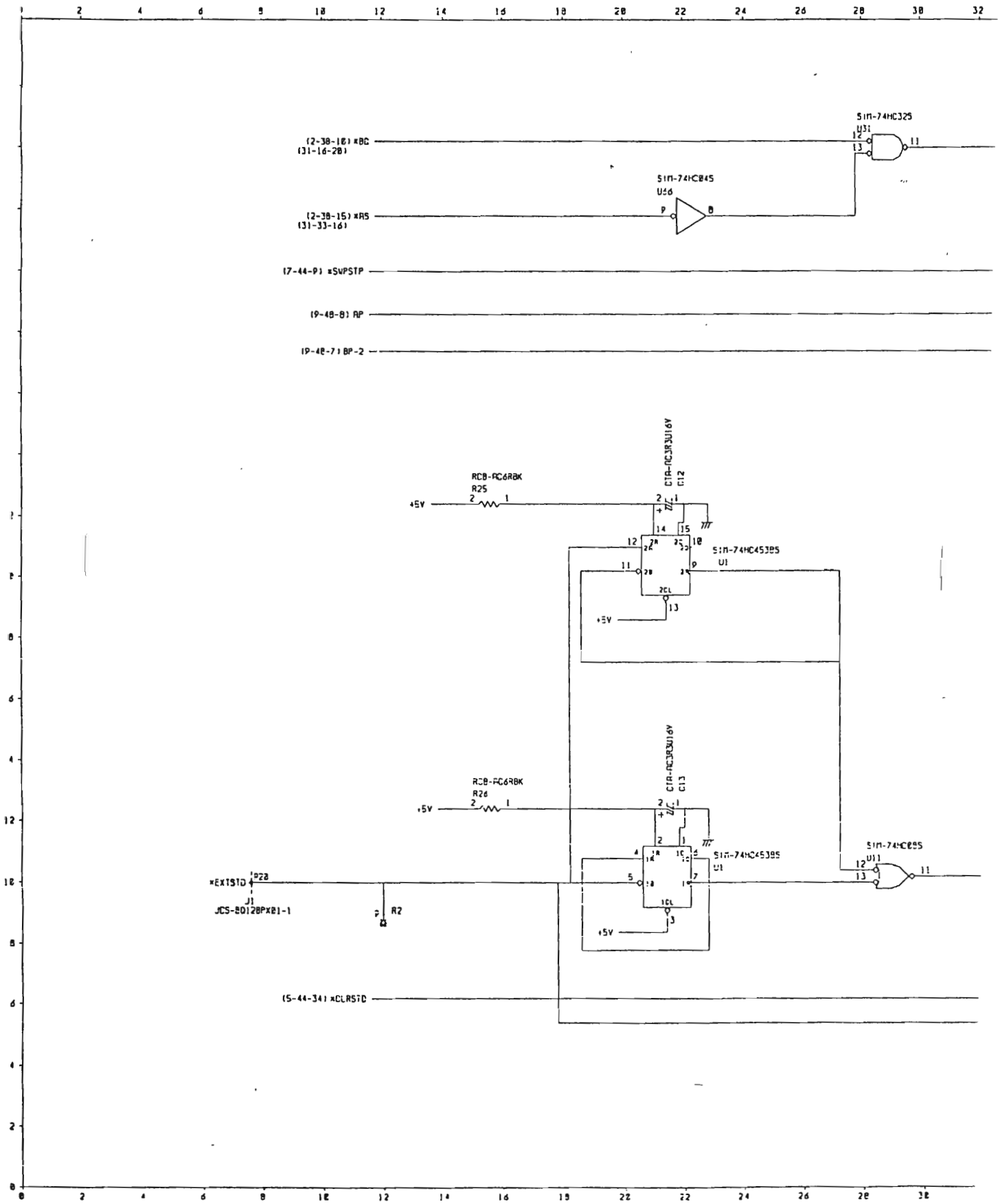
SIM-74HC325
U31
(2-38-10) xBC
(31-16-20)
SIM-74HC045
U56
(2-38-15) xRS
(31-33-16)
(7-44-9) xSVPSTP
(9-48-8) AP
(9-48-7) BP-2
CTA-RC3R3U16V
C12
RCB-RC6R8K
R25
+5V
SIM-74HC4538S
U1
CTA-RC3R3U16V
C13
RCB-RC6R8K
R26
+5V
SIM-74HC4538S
U1
SIM-74HC085
U11
xEXTSTD
J1
JCS-80128PX81-1
R2
(5-44-34) xCLRSTD

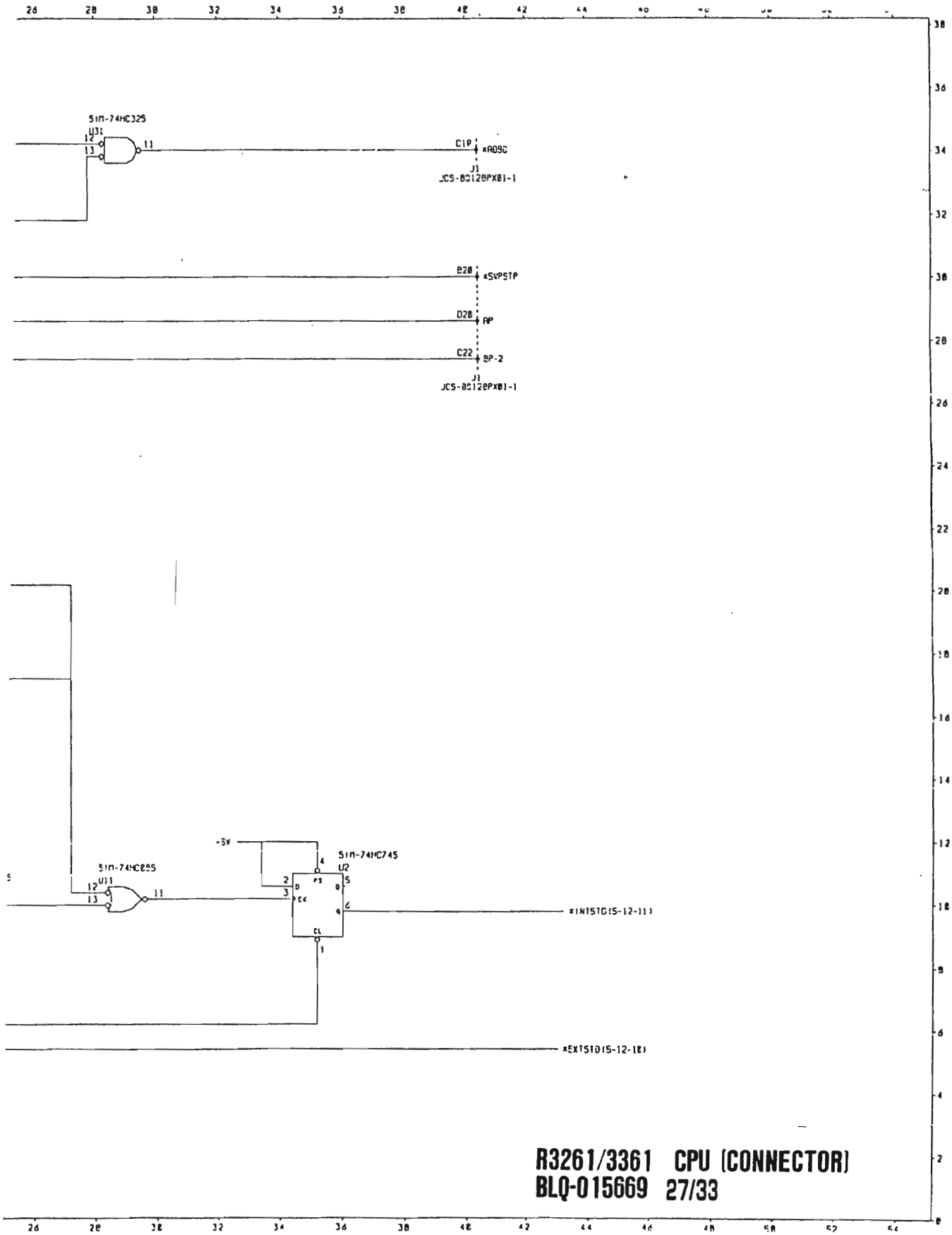

R3261/3361 CPU (CONNECTOR)
BLQ-015669 27/33

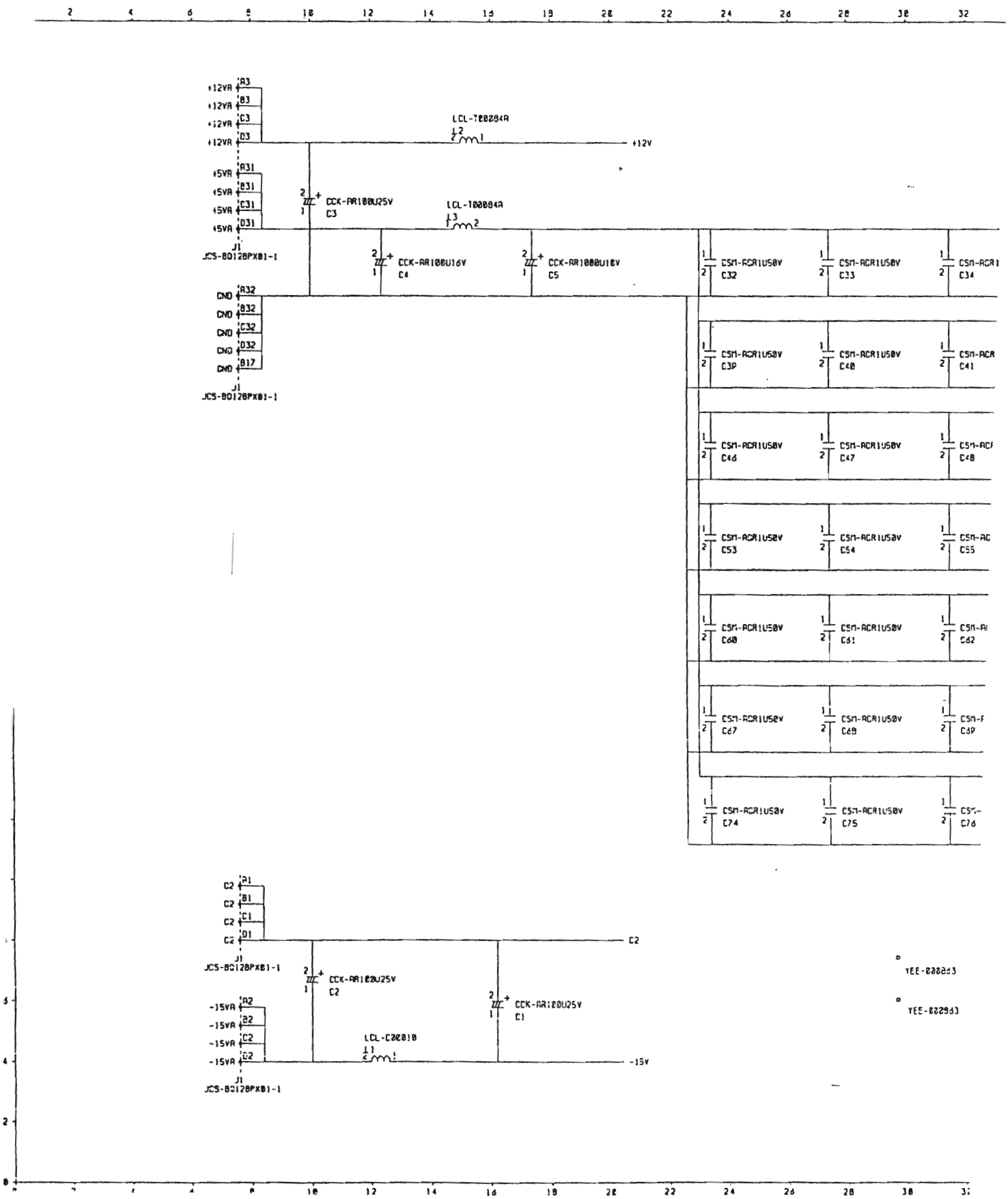
+12VA
+5VA
GND
-15VA
C2
J1
JCS-BC128PXB1-1
LCL-T00084A
+12V
CCK-AR100U25V
C3
CCK-AR100U16V
C4
CCK-AR1000U10V
C5
CSM-ACR1U50V
C32
C33
C34
C39
C40
C41
C46
C47
C48
C53
C54
C55
C60
C61
C62
C67
C68
C69
C74
C75
C76
CCK-AR120U25V
C2
C1
LCL-C00010
-15V
YEE-000853
YEE-000963

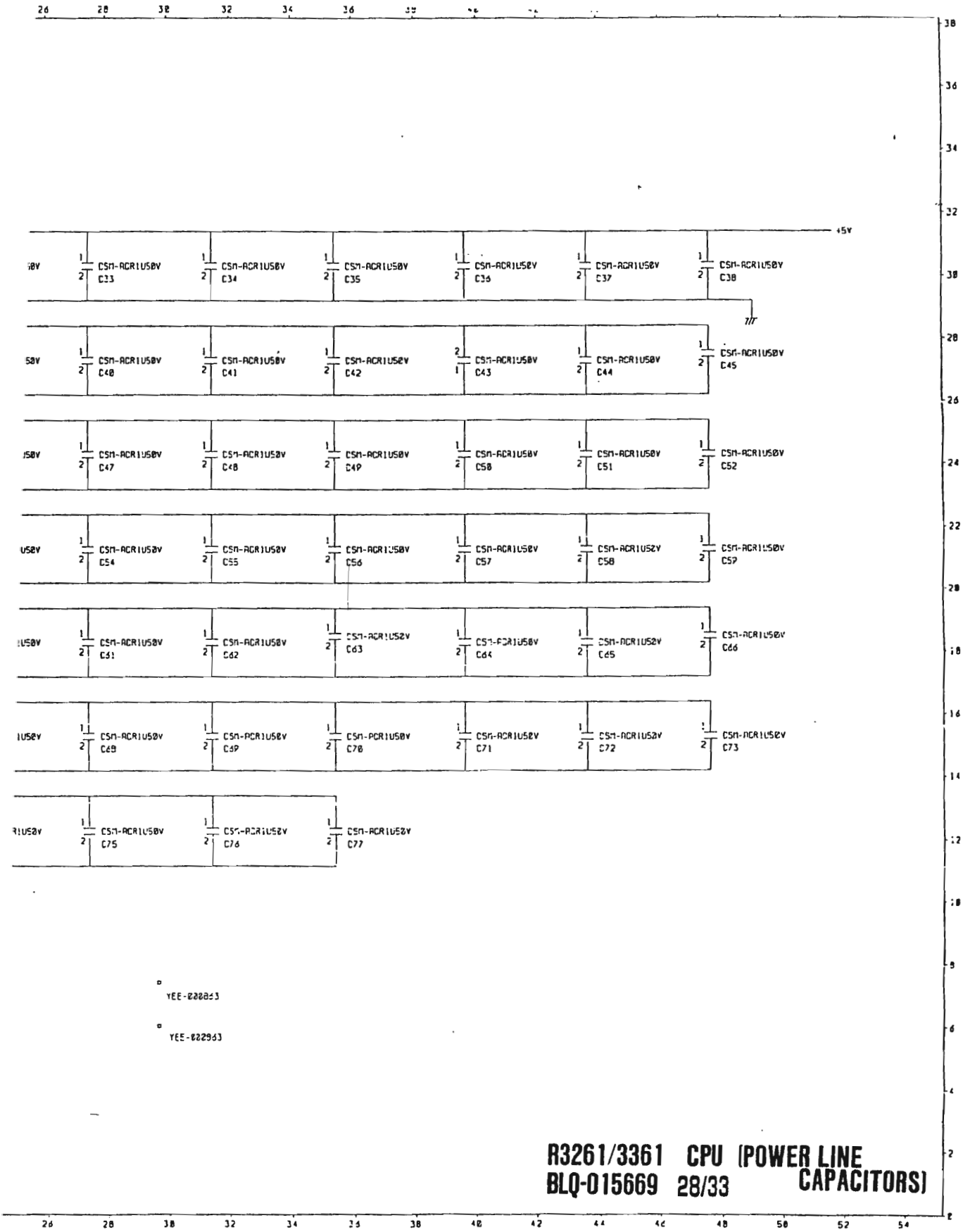

R3261/3361 CPU (POWER LINE CAPACITORS)
BLQ-015669 28/33

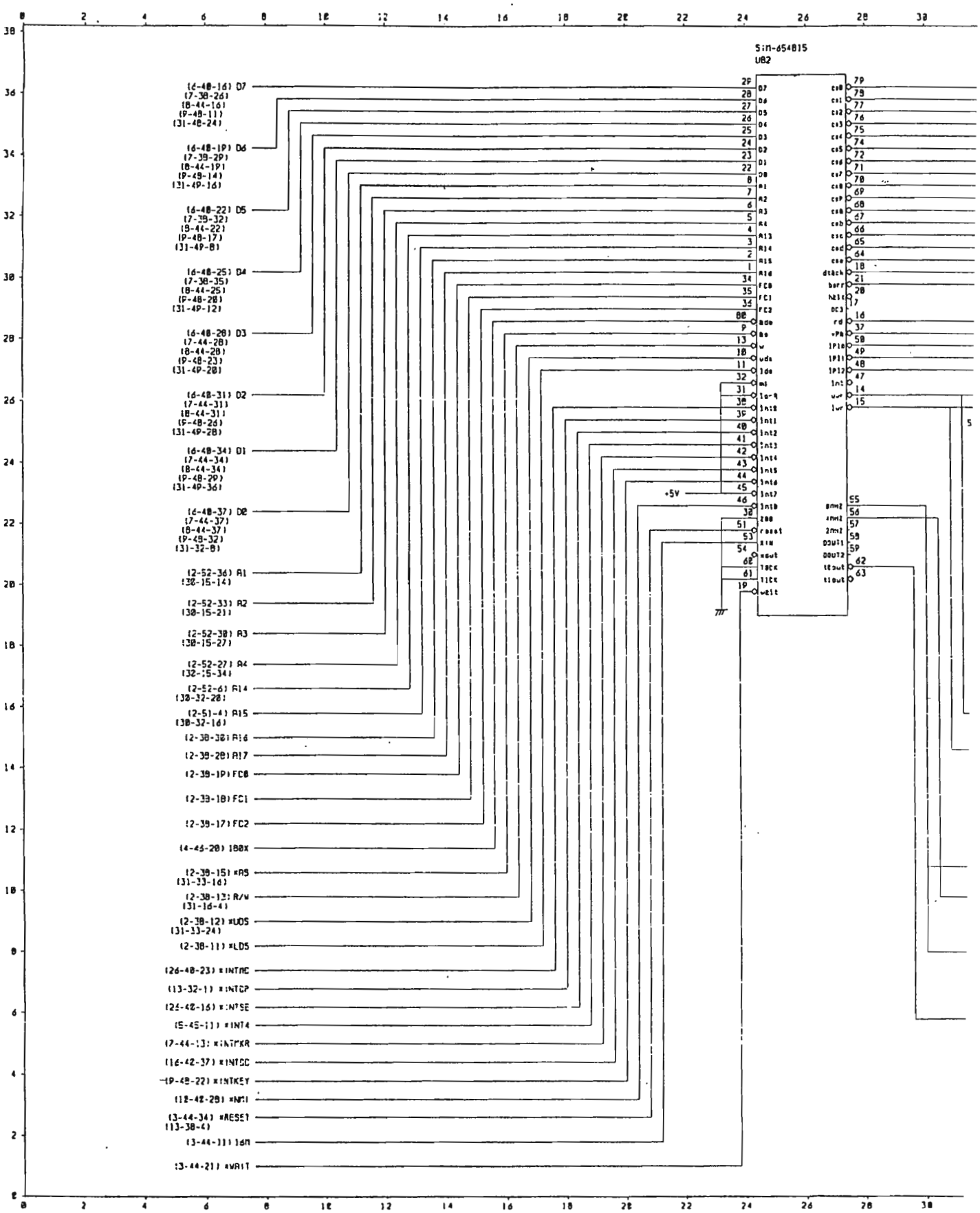
SIM-654815
U82
(6-48-16) D7
(7-38-26)
(8-44-16)
(9-48-11)
(31-48-24)
(6-48-19) D6
(7-38-29)
(8-44-19)
(9-49-14)
(31-49-16)
(6-48-22) D5
(7-39-32)
(8-44-22)
(9-48-17)
(31-49-8)
(6-48-25) D4
(7-38-35)
(8-44-25)
(9-48-20)
(31-49-12)
(6-48-28) D3
(7-44-28)
(8-44-28)
(9-48-23)
(31-49-20)
(6-48-31) D2
(7-44-31)
(8-44-31)
(9-48-26)
(31-49-28)
(6-48-34) D1
(7-44-34)
(8-44-34)
(9-48-29)
(31-49-36)
(6-48-37) D0
(7-44-37)
(8-44-37)
(9-49-32)
(31-32-8)
(2-52-36) A1
(30-15-14)
(2-52-33) A2
(30-15-21)
(2-52-30) A3
(30-15-27)
(2-52-27) A4
(32-15-34)
(2-52-6) A14
(30-32-28)
(2-51-4) A15
(30-32-16)
(2-38-38) A16
(2-39-28) A17
(2-39-19) FC0
(2-39-18) FC1
(2-39-17) FC2
(4-46-20) 180X
(2-39-15) *AS
(31-33-16)
(2-38-13) R/W
(31-16-4)
(2-38-12) *UDS
(31-33-24)
(2-38-11) *LDS
(26-48-23) *INTAC
(13-32-1) *INTGP
(25-42-16) *INTSE
(5-45-11) *INT4
(7-44-13) *INTFKR
(16-42-37) *INTSC
(9-48-22) *INTKEY
(18-42-29) *NMI
(3-44-34) *RESET
(13-38-4)
(3-44-11) 16M
(3-44-21) *WAIT
+5V

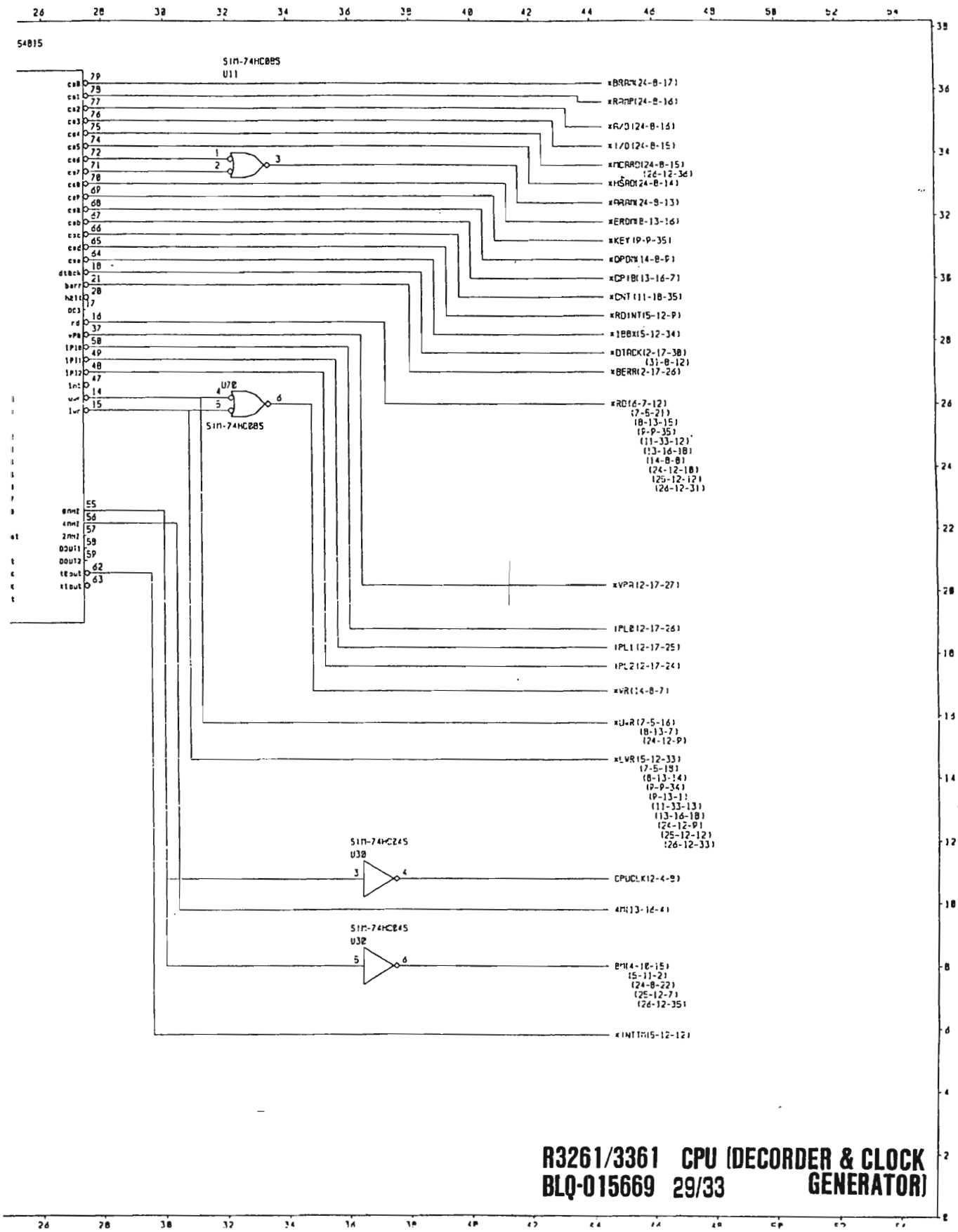

R3261/3361 CPU (DECORDER & CLOCK GENERATOR)
BLQ-015669 29/33

2 4 6 8 10 12 14 16 18 20 22 24 26 28 30 32 34

CND 1
CND 2
J10
JCR-AF040PX02

A4 3
J10
JCR-AF040PX02
A4(6-7-34)
(7-5-34)
(8-13-26)
(11-18-36)
(23-19-5)
(25-12-18)
(29-8-17)

A5 4
J10
JCR-AF040PX02
A5(6-7-33)
(7-5-33)
(8-13-25)
(11-18-35)
(23-19-5)
(25-12-15)

A3 5
J10
JCR-AF040PX02
A3(6-7-35)
(7-5-35)
(8-13-27)
(9-9-36)
(13-16-10)
(23-19-6)
(25-12-16)
(29-8-18)

A6 6
J10
JCR-AF040PX02
A6(6-7-32)
(7-5-33)
(8-13-24)
(23-19-4)
(25-12-19)

A2 7
J10
JCR-AF040PX02
A2(6-7-36)
(7-5-36)
(8-13-28)
(9-9-37)
(11-33-18)
(13-16-16)
(14-8-18)
(23-19-7)
(25-12-17)
(29-8-19)

A7 8
J10
JCR-AF040PX02
A7(6-7-31)
(7-5-32)
(9-13-23)
(23-19-3)
(25-12-14)

A1 9
J10
JCR-AF042PX02
A1(6-7-37)
(7-5-37)
(8-13-29)
(9-9-38)
(11-33-11)
(13-16-17)
(14-8-11)
(23-19-8)
(25-12-17)
(29-8-20)

A8 10
J10
JCR-AF042PX02
A8(5-12-36)
(6-7-38)
(7-5-31)
(8-13-22)
(23-19-2)

(2-38-19)FC0 11 FC0
J10
JCR-AF042PX02

A9 12
J10
JCR-AF040PX02
A9(5-12-36)
(6-7-29)
(7-5-32)
(8-13-21)
(24-13-34)
(25-12-13)
(25-12-28)

(2-39-18)FC1 13 FC1
J10
JCR-AF040PX02

A10 14
J10
JCR-AF040PX02
A10(5-12-35)
(6-7-28)
(7-5-29)
(8-13-20)
(24-13-34)

(2-39-17)FC2 15 FC2
J10
JCR-AF040PX02

A11 16
A11(5-12-32)
(6-7-27)
(7-5-29)
(8-13-19)
(24-13-33

IPL0 17
IPL0(2-17-26)

A12 18
A12(6-7-26)
(7-5-28)
(8-13-18)
(24-13-32

IPL1 19
IPL1(2-17-25)

A13 20
A13(6-7-18)
(7-5-27)
(8-13-17)
(24-13-3

IPL2 21
IPL2(2-17-24

A14 22
A14(6-7-17)
(7-5-26)
(24-13-3
(29-8-1.

xBERR 23
xBERR(2-17-2

A15 24
A15(6-7-16)
(7-5-25)
(24-13-
(29-8-1

xVPA 25
xVPA(2-17-2
J10
JCR-AF042PX02

(2-38-30)A16 26 A16

(2-38-16)E 27 E
J10
JCR-AF040PX02

(2-38-29)A17 28 A17

(2-38-9)VMA 29 VMA
J10
JCR-AF040PX02

2 4 6 8 10 12 14 16 18 20 22 24 26 28 30 32

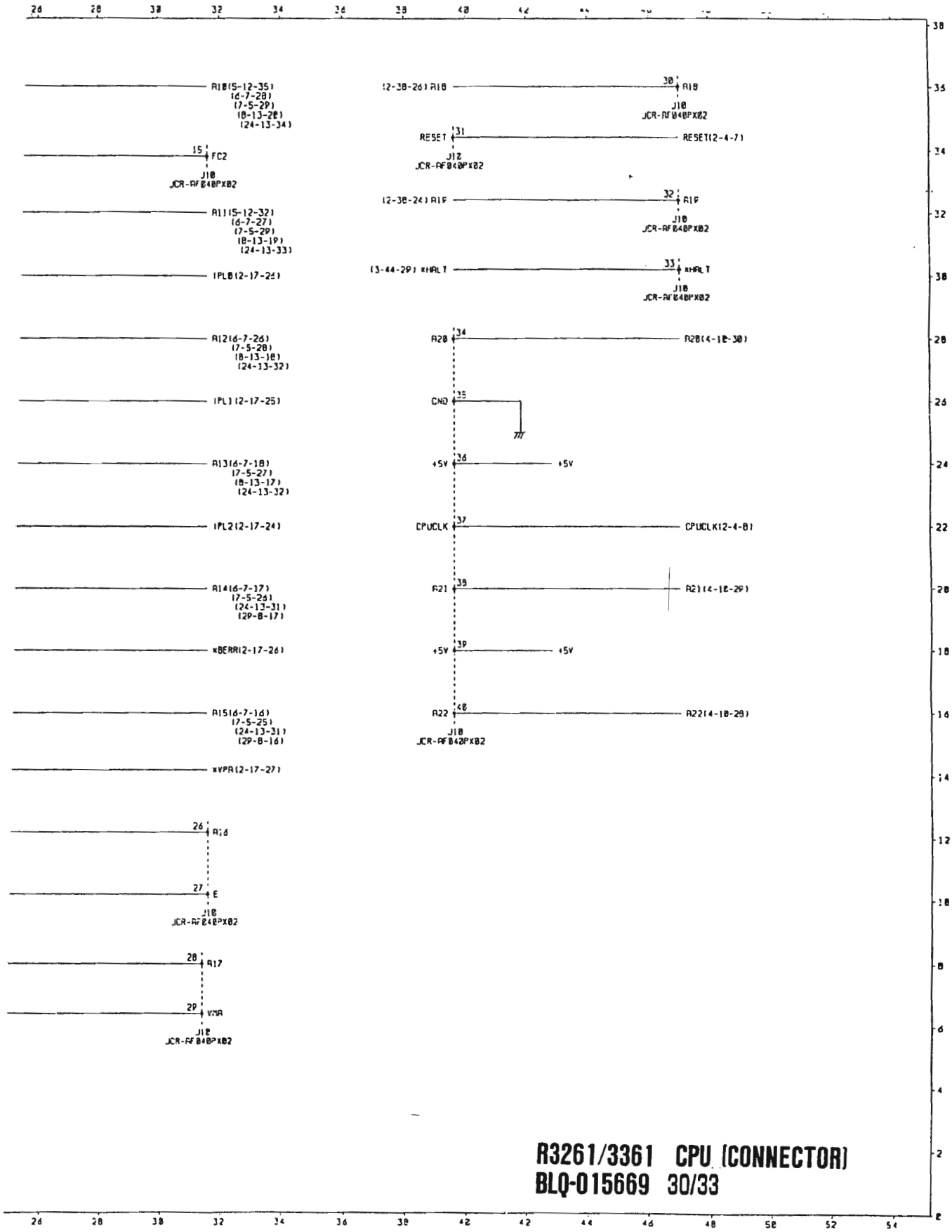

R3261/3361 CPU (CONNECTOR)
BLQ-015669 30/33

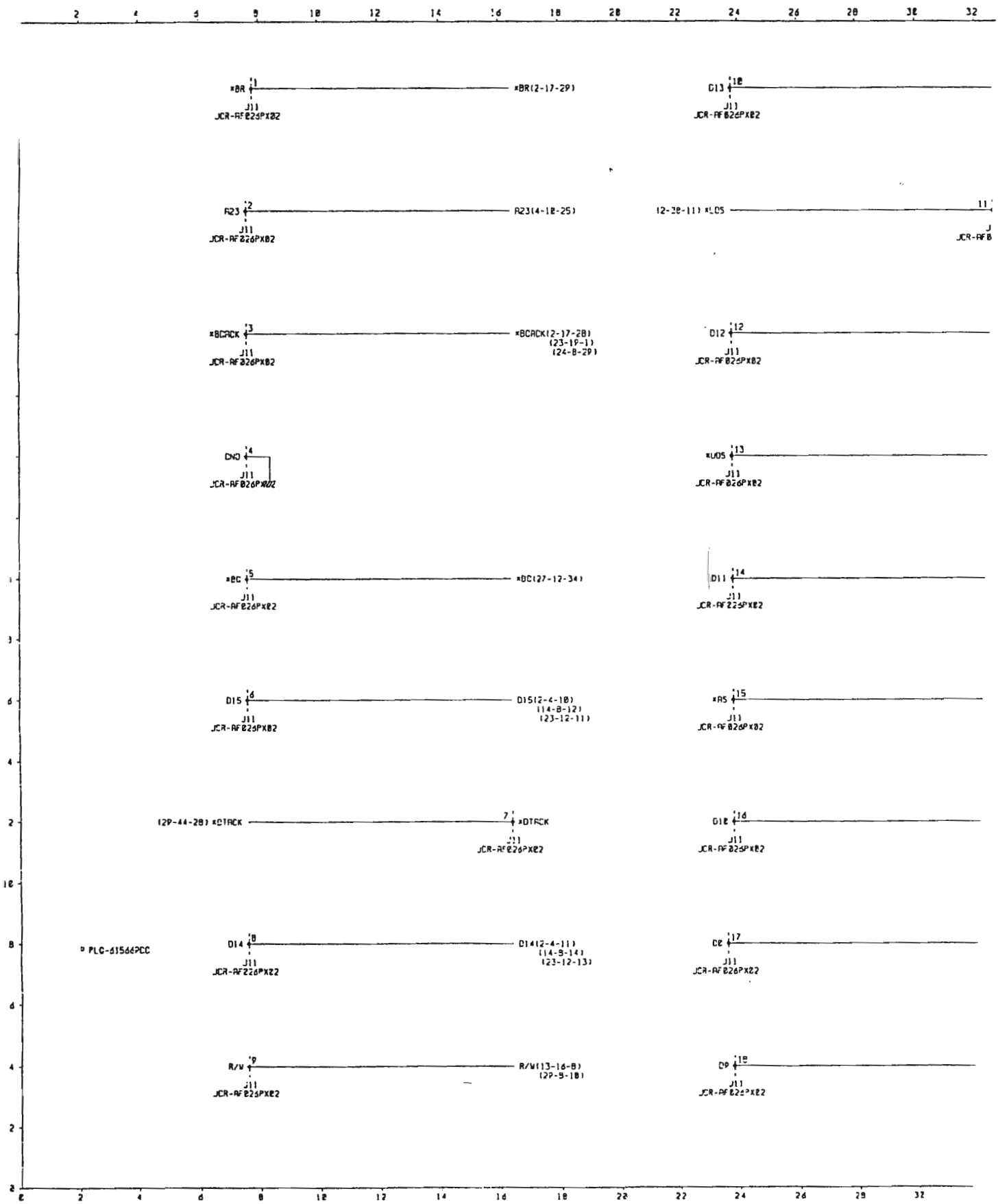
*BR 1 J11 JCR-AF026PX02
*BR(2-17-29)
D13 10 J11 JCR-AF026PX02
A23 2 J11 JCR-AF026PX02
A23(4-18-25)
(2-38-11) *LDS 11
*BCACK 3 J11 JCR-AF026PX02
*BCACK(2-17-28) (23-19-1) (24-8-29)
D12 12 J11 JCR-AF026PX02
GND 4 J11 JCR-AF026PX02
*UDS 13 J11 JCR-AF026PX02
*BC 5 J11 JCR-AF026PX02
*BC(27-12-34)
D11 14 J11 JCR-AF026PX02
D15 6 J11 JCR-AF026PX02
D15(2-4-10) (14-8-12) (23-12-11)
*RS 15 J11 JCR-AF026PX02
(29-44-28) *DTACK 7 J11 JCR-AF026PX02
*DTACK
D10 16 J11 JCR-AF026PX02
PLC-61566PCC
D14 8 J11 JCR-AF026PX02
D14(2-4-11) (14-8-14) (23-12-13)
D8 17 J11 JCR-AF026PX02
R/W 9 J11 JCR-AF026PX02
R/W(13-16-8) (29-9-10)
D9 18 J11 JCR-AF026PX02

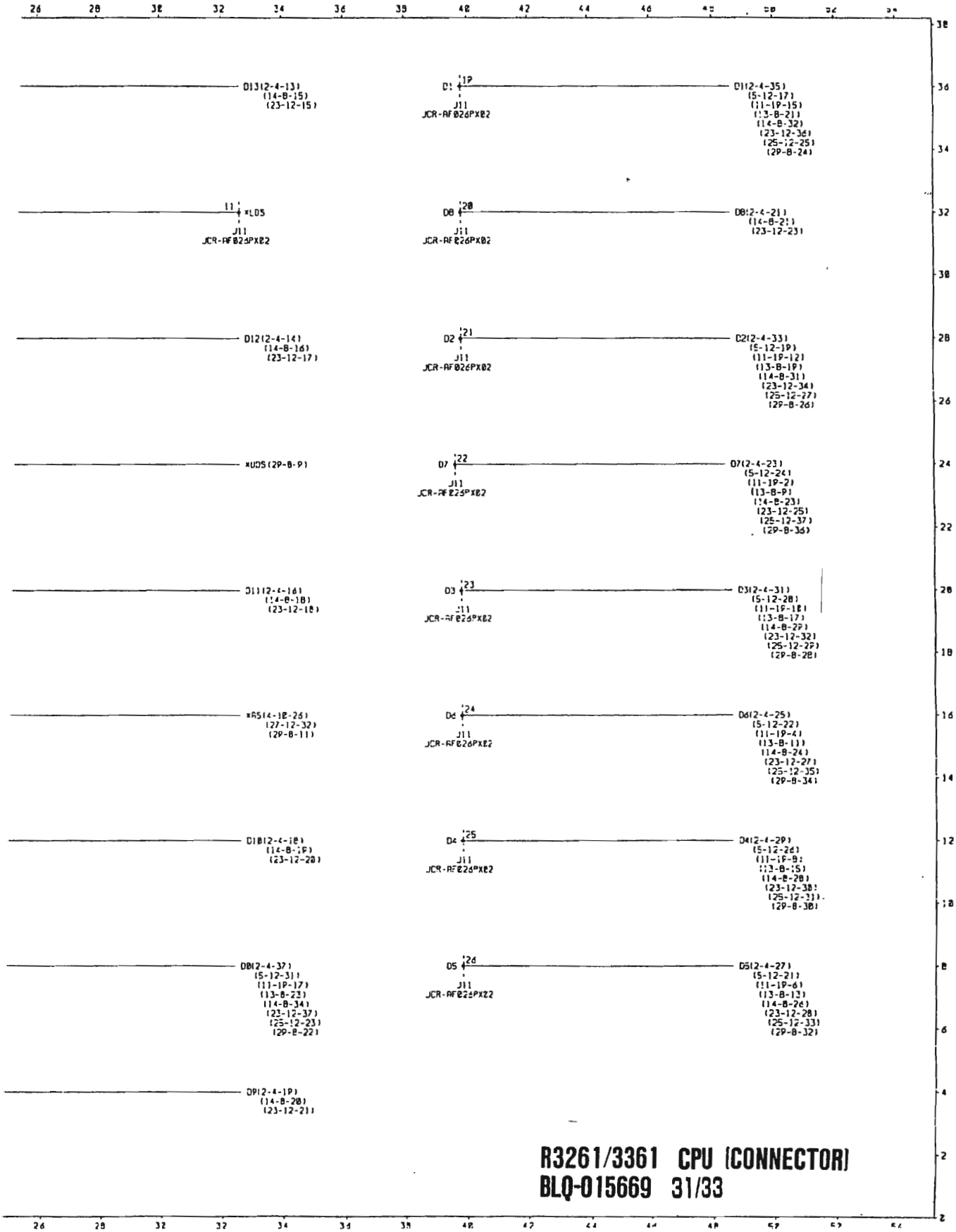

R3261/3361 CPU (CONNECTOR)
BLQ-015669 31/33

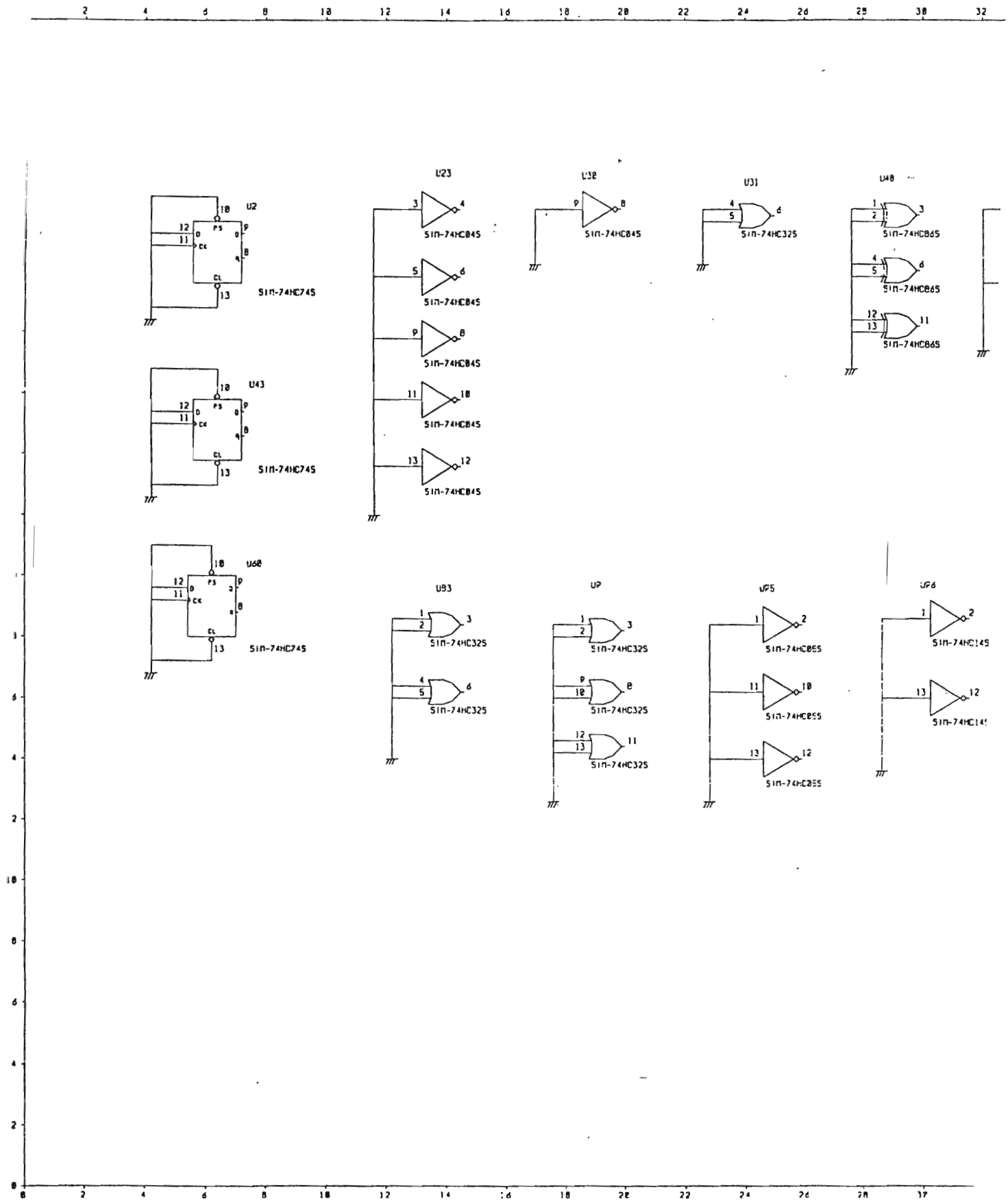
U2
SIM-74HC74S
U43
SIM-74HC74S
U68
SIM-74HC74S
U23
SIM-74HC04S
U32
SIM-74HC04S
U31
SIM-74HC32S
U48
SIM-74HC86S
U93
SIM-74HC32S
U9
SIM-74HC32S
U95
SIM-74HC05S
U96
SIM-74HC14S

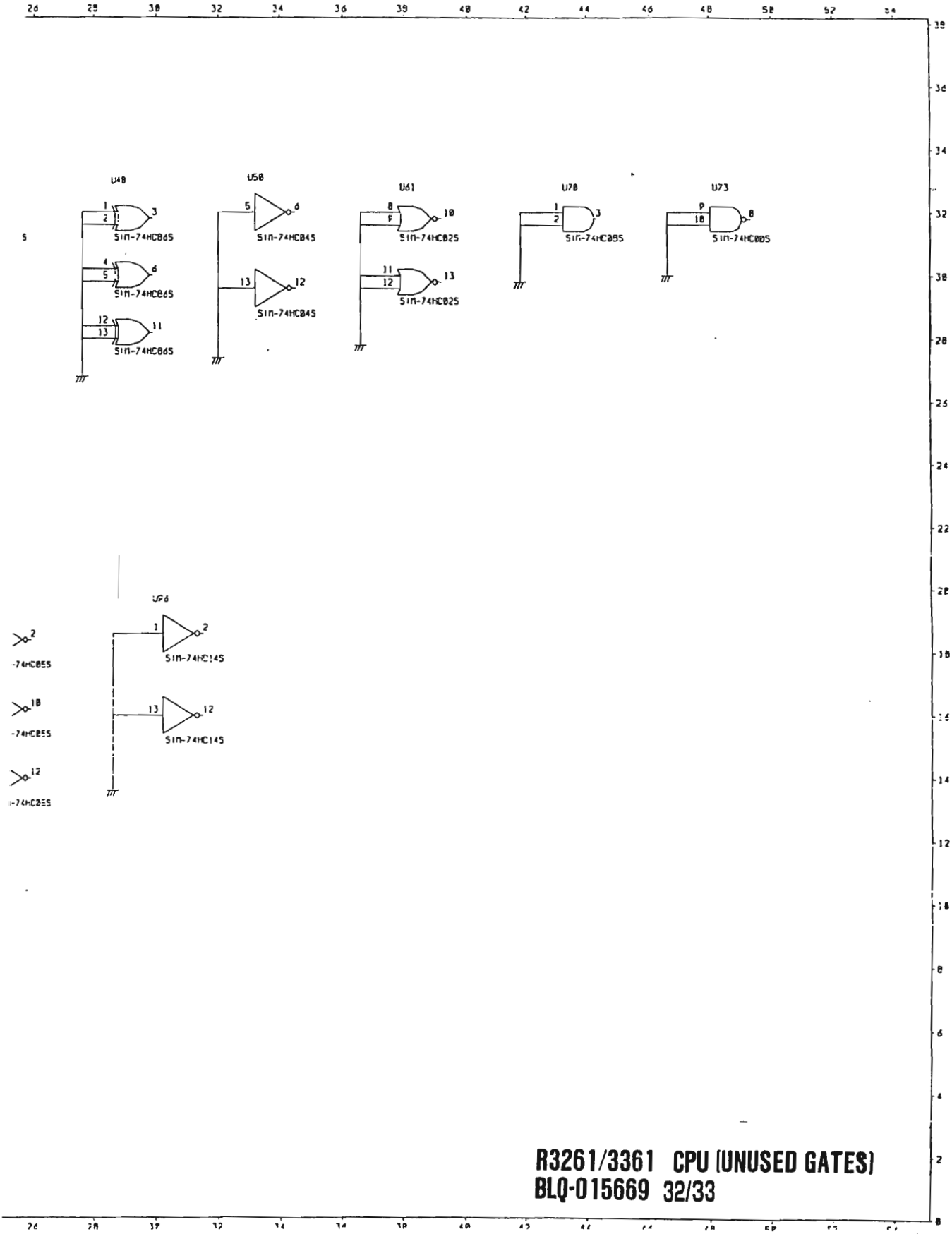

R3261/3361 CPU (UNUSED GATES)
BLQ-015669 32/33

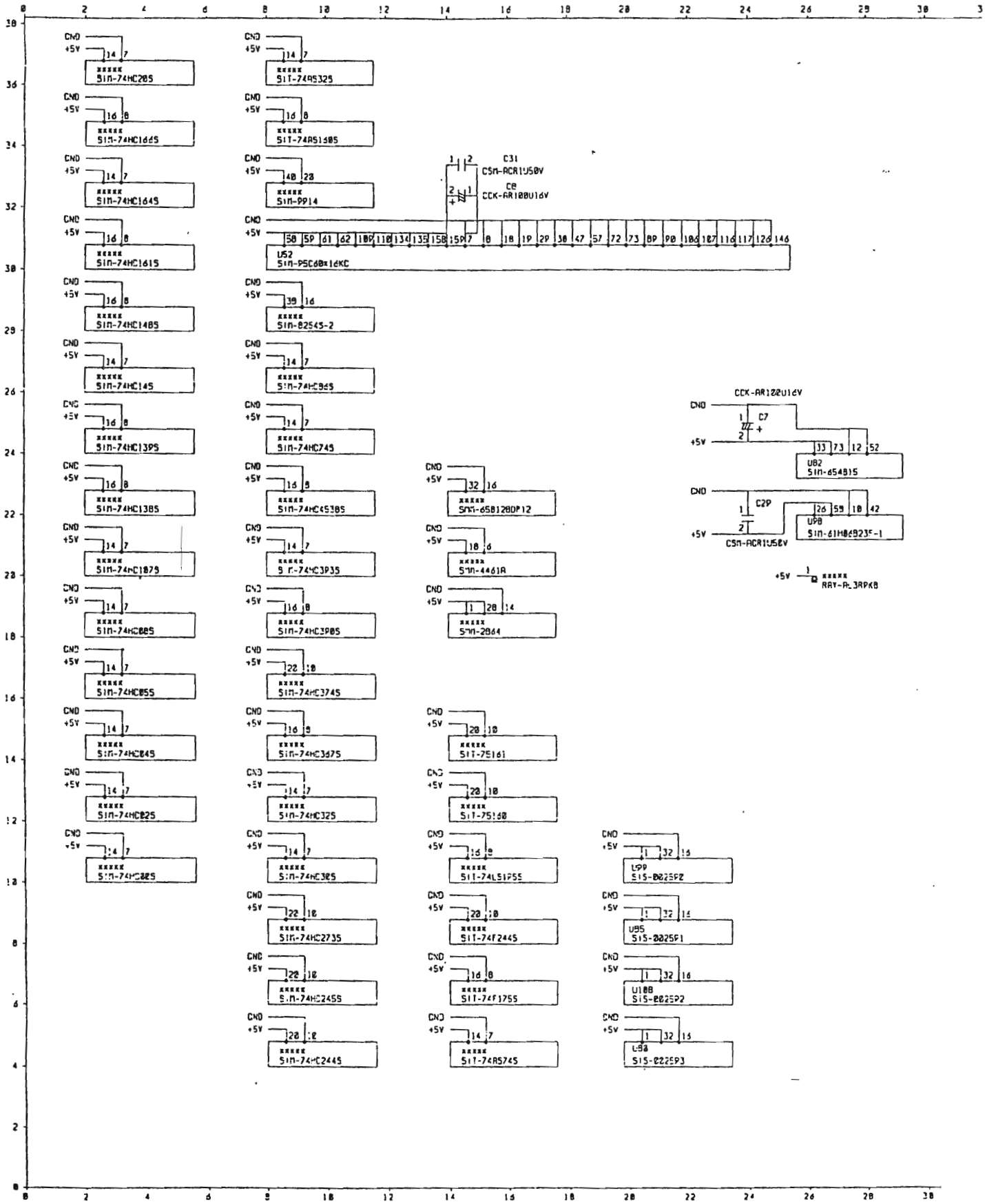
C31
CSM-ACR1U50V
C8
CCK-AR100U16V
U52
SIM-P5C60x16KC
CCK-AR120U16V
C7
U82
SIM-654B15
C2P
CSM-ACR1U50V
U98
SIM-61H86B23F-1
RAY-AL3RPK8
SIM-74HC20S
SIM-74HC16GS
SIM-74HC164S
SIM-74HC161S
SIM-74HC148S
SIM-74HC14S
SIM-74HC139S
SIM-74HC138S
SIM-74HC187S
SIM-74HC08S
SIM-74HC05S
SIM-74HC04S
SIM-74HC02S
SIM-74HC08S
SIT-74AS32S
SIT-74AS158S
SIM-P914
SIM-82545-2
SIM-74HC86S
SIM-74HC74S
SIM-74HC4538S
SIM-74HC390S
SIM-74HC30S
SIM-74HC245S
SIM-74HC244S
SIM-74HC273S
SIM-74HC32S
SIM-74HC38S
SIM-74HC37S
SIM-74HC367S
SIM-74HC245S
SIM-74HC244S
SMM-65B128DP12
SMM-4461A
SMM-2864
SIT-75161
SIT-75160
SIT-74LS175S
SIT-74F244S
SIT-74F175S
SIT-74AS74S
U99
SIS-002592
U95
SIS-002591
U100
SIS-002592
U98
SIS-002593

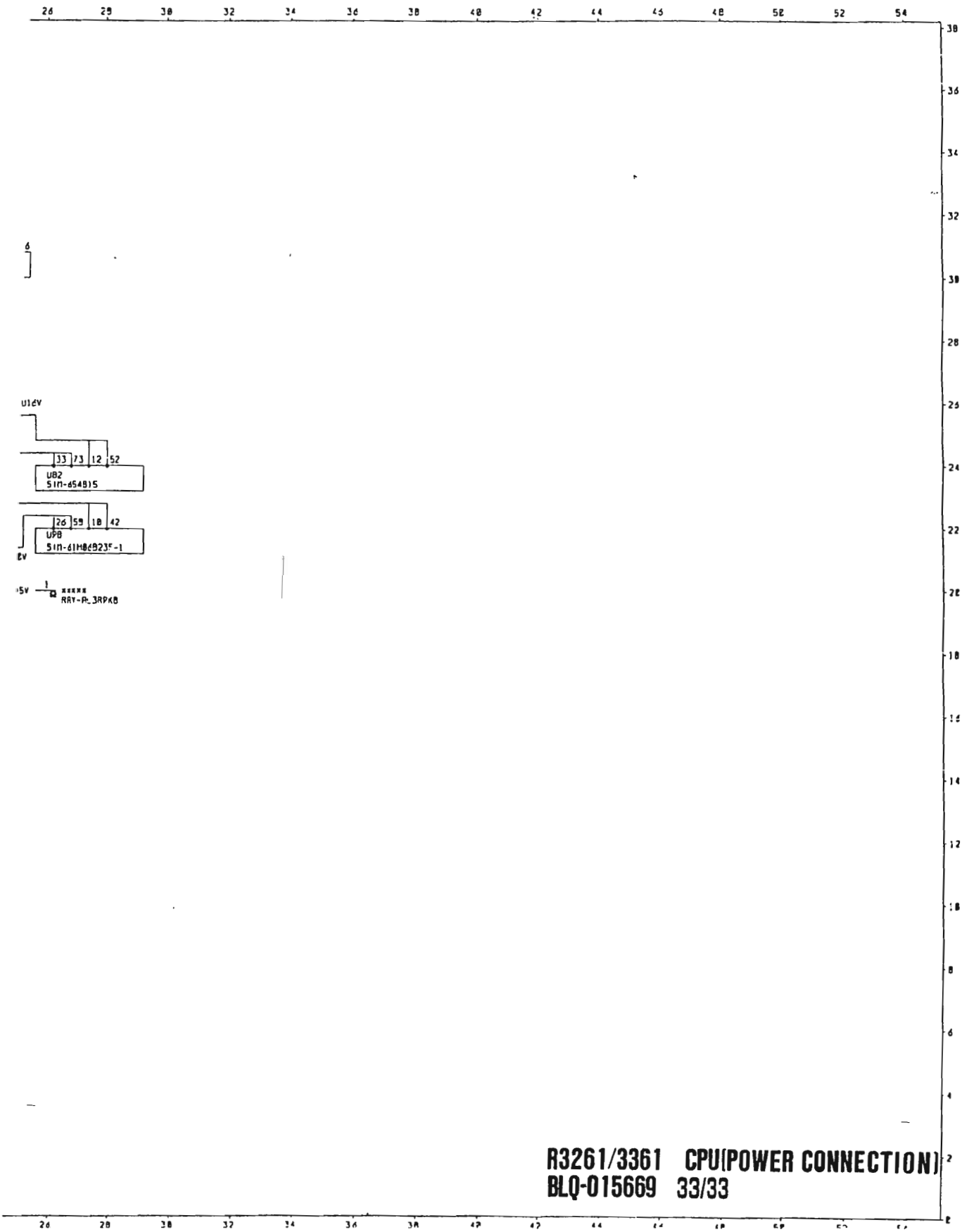

R3261/3361 CPU(POWER CONNECTION)
BLQ-015669 33/33

R3261/3361
TG KEY
BLB-015775 (1/1)

Parts No.	Advantest Stock No.	Description	Note
D1	NLD-000010	LED	
J1	DCB-QS1272X02-1	CABLE ASSEMBLY	
S1	KSP-000609	SWITCH	

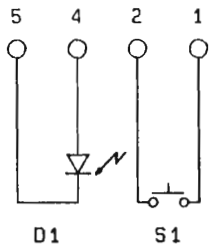

R3361 TG KEY
BLB-015775

R3261/3361
KEY
BLQ-015673 (1/1)

Parts No.	Advantest Stock No.	Description	Note
D1-3	NLD-000010	LED	
D4	NLD-000111	LED	
D5	NLD-000010	LED	
J1	DCB-RR1792X03-1	CONNECTOR	
J2	JCP-BH005PX02	CONNECTOR	
R1-6	RCB-AG680	FXD CAR 680Ω ±5% 1/8W	
S1-6	KSP-000888	SWITCH	
S7-42	KSP-000609	SWITCH	

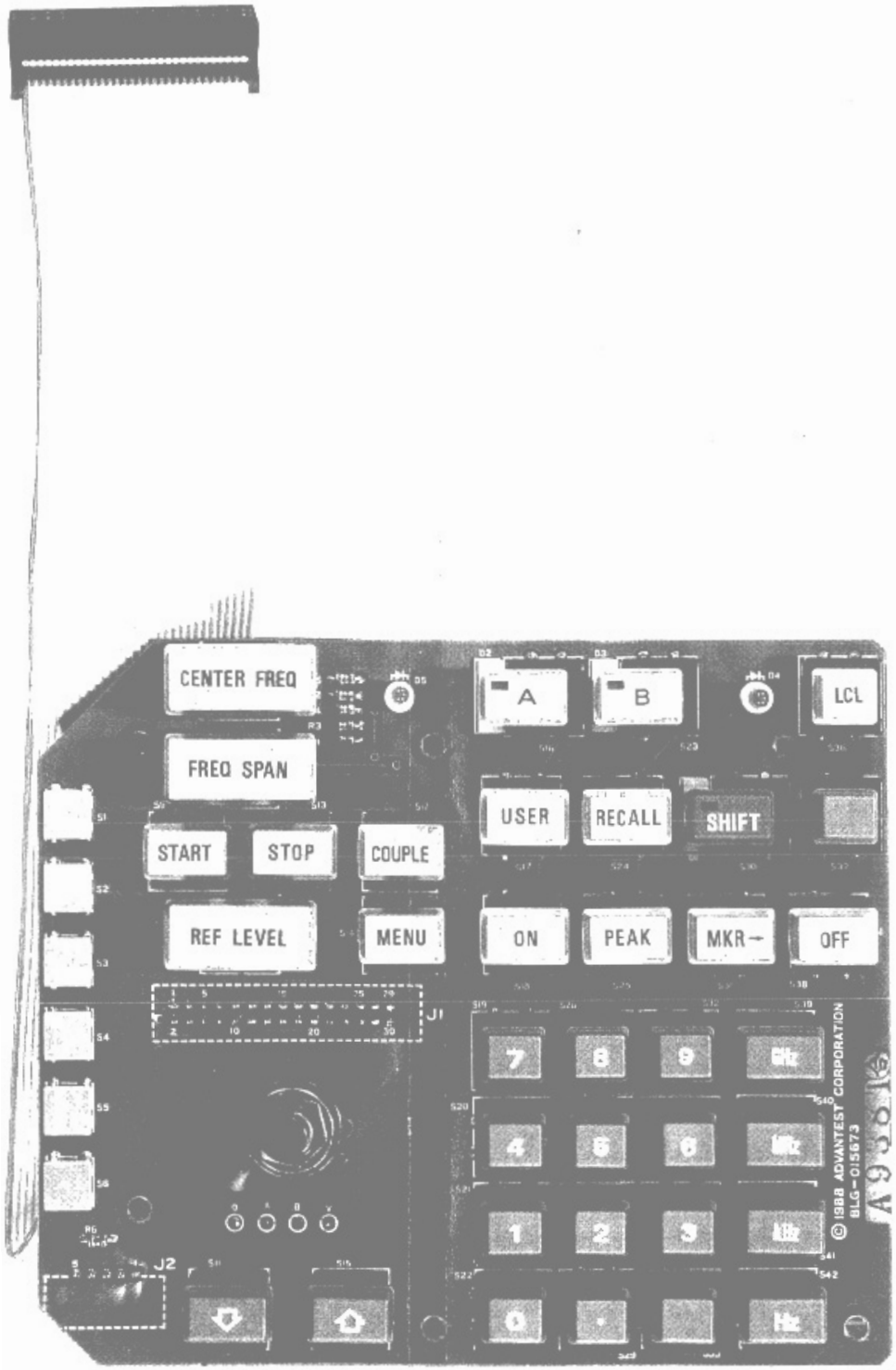

PARTS LOCATION
KEY
BLG-015673

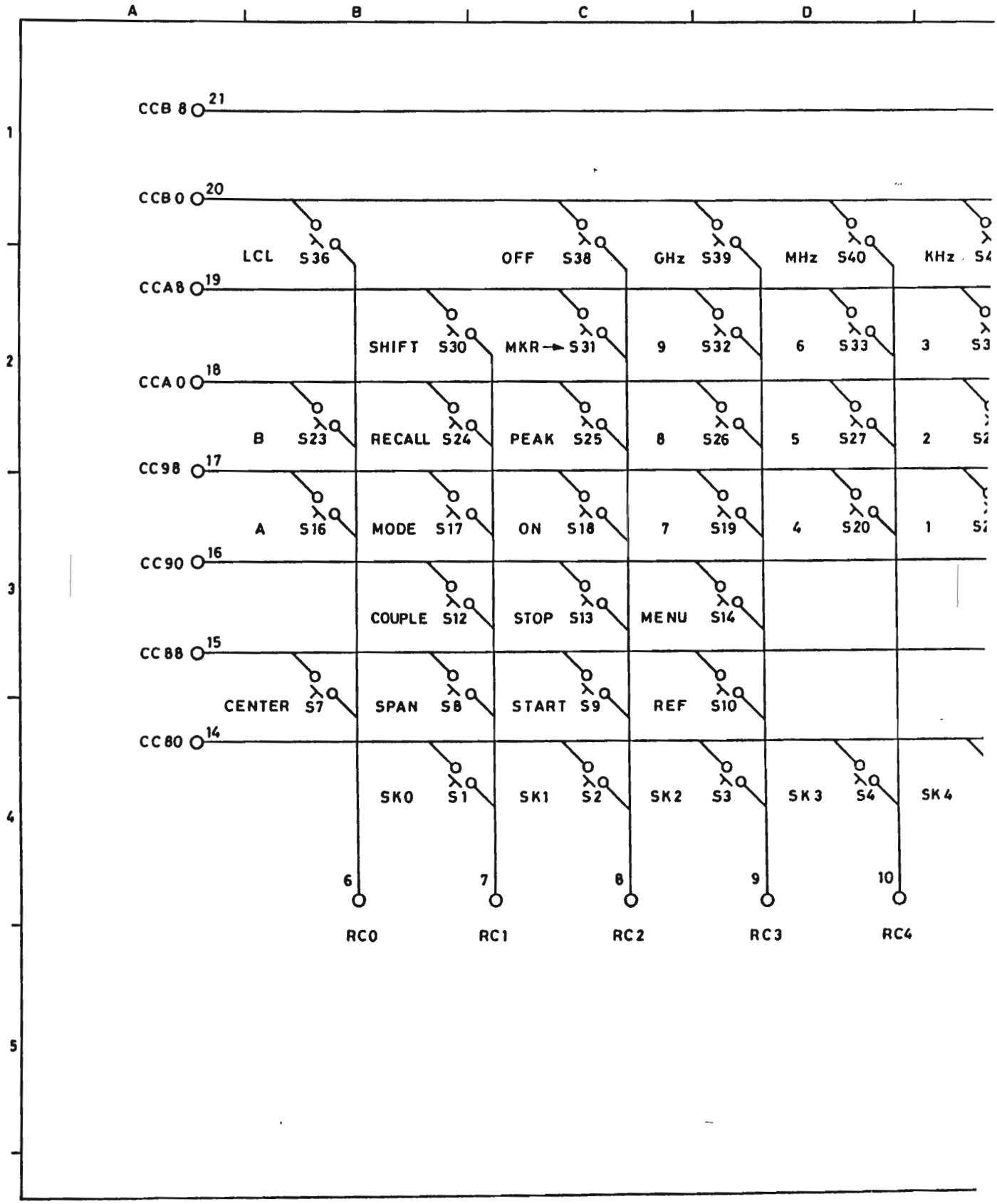
A
B
C
D
1
2
3
4
5
CCB 8 21
CCB 0 20
CCA 8 19
CCA 0 18
CC98 17
CC90 16
CC88 15
CC80 14
LCL S36
OFF S38
GHz S39
MHz S40
KHz
SHIFT S30
MKR→ S31
9 S32
6 S33
3
B S23
RECALL S24
PEAK S25
8 S26
5 S27
2
A S16
MODE S17
ON S18
7 S19
4 S20
1
COUPLE S12
STOP S13
MENU S14
CENTER S7
SPAN S8
START S9
REF S10
SK0 S1
SK1 S2
SK2 S3
SK3 S4
SK4
6
7
8
9
10
RC0
RC1
RC2
RC3
RC4

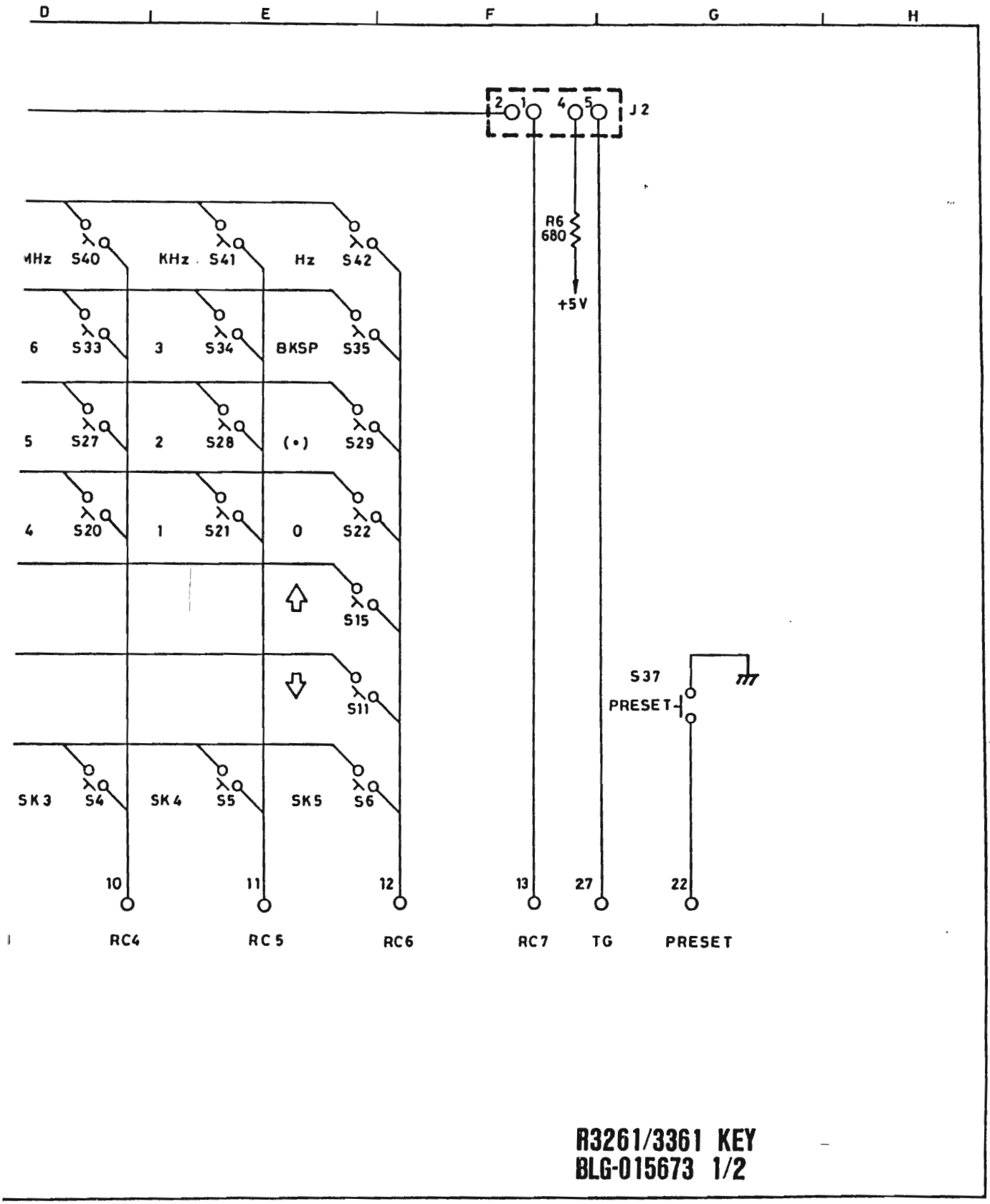
D
E
F
G
H
J2
R6
680
+5V
MHz S40
KHz S41
Hz S42
6 S33
3 S34
BKSP S35
5 S27
2 S28
(•) S29
4 S20
1 S21
0 S22
S15
S11
SK3 S4
SK4 S5
SK5 S6
S37
PRESET
10
11
12
13
27
22
RC4
RC5
RC6
RC7
TG
PRESET
R3261/3361 KEY
BLG-015673 1/2

A B C D E

D1 ~ D5
R1 ~ R5 : RCB- AG680

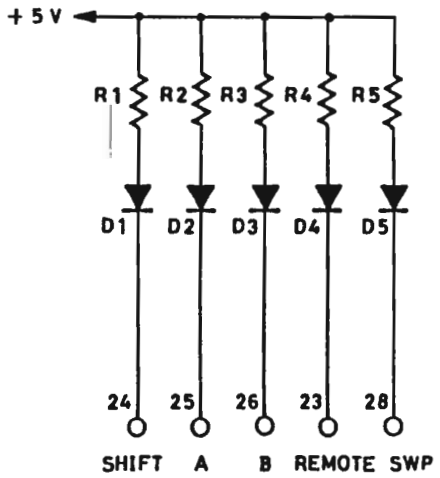

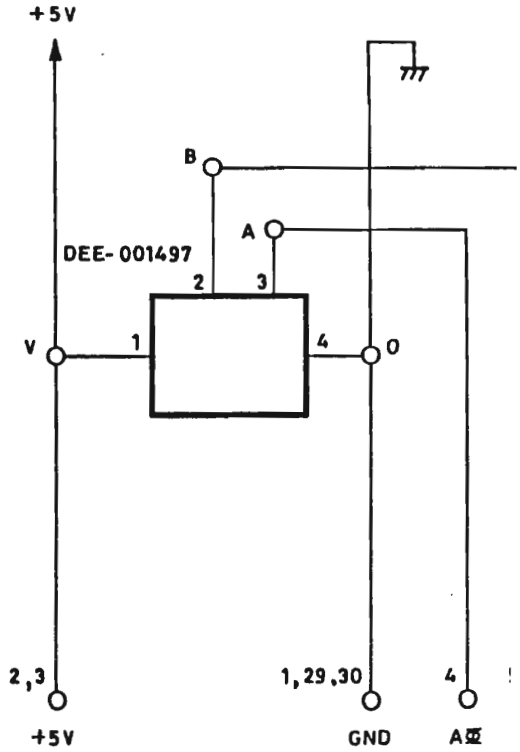

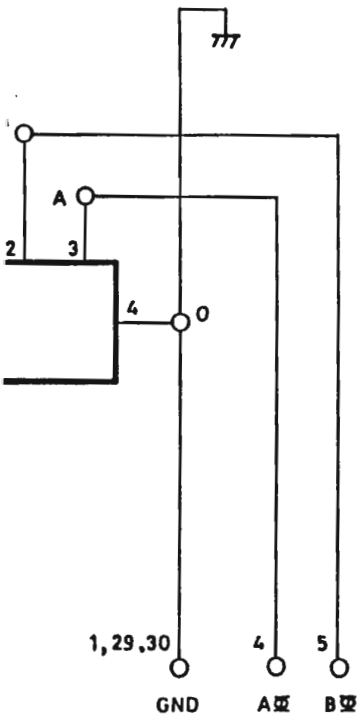

R3261/3361 KEY
BLG-015673 2/2

R3261/3361
RF BLOCK
WBL-3261RF (1/1)

Parts No.	Advantest Stock No.	Description	Note
	BLB-015646		
	BLB-015647		
	BLB-015727		
	BLC-015650		
	BLG-015645		
	BLH-015667		
	BLK-015649		
	BTB-015641		
	BTB-015642		
	BTB-016118		
	BTD-015644		
	DCB-FQ1170X01-1	CABLE ASSEMBLY	
	JCS-AD010JX01-1	CONNECTOR	
	JTM-BL001JX01	CONNECTOR	
	JTM-BP001JX01	CONNECTOR	
C1	CFT-AK220P50V	FXD COAXIAL 220PF +100%, -0% 50V	
C2	CSM-TG1U50V	FXD CER 1μF +80%, -20% 50V	
CB3	DCB-FF3828X14-1	CABLE ASSEMBLY	
CB4	DCB-FF3828X09-1	CABLE ASSEMBLY	
CB5	DCB-FF3828X09-1	CABLE ASSEMBLY	
CB7	DCB-FF0971X11A-1	CABLE ASSEMBLY	
CB8	DCB-FF0971X09A-1	CABLE ASSEMBLY	
CB9	DCB-FF3828X06-1	CABLE ASSEMBLY	
CB10	DCB-FF3828X06-1	CABLE ASSEMBLY	
CB11	DCB-FQ3829X01-1	CABLE ASSEMBLY	
CB12	DCB-QR3831X01-1	CABLE ASSEMBLY	
FL1	DNF-001052	EMI FILTER	
FL32	DNF-001052	EMI FILTER	
FL40	DEE-001830	4GHz COAXIAL LPF	
J1	JCF-AF001JX09	CONNECTOR	
J2	JCF-AC001JX02	CONNECTOR	
J9	JCF-AC001JX02	CONNECTOR	
J10	JCF-AF003JX05-3	CONNECTOR	
J11	JCS-AV004JX01	CONNECTOR	
J12	JCR-AE010JX02	CONNECTOR	
J13	YEE-000734-1	CONNECTOR	
L1	LCL-B00820	COIL 33μH ±10%	
OS1	DXY-001664-1	TOP-1244 YTO (CUSTOM DEVICE)	

R3261/3361
RF BLOCK
WBL-3361RF (1/1)

Parts No.	Advantest Stock No.	Description	Note
	BLB-015646		
	BLB-015647		
	BLB-015727		
	BLC-015650		
	BLG-015645		
	BLH-015667		
	BLK-015649		
	BTB-015641		
	BTB-015642		
	BTB-016118		
	BTD-015644		
	DCB-FQ1170X01-1	CABLE ASSEMBLY	
	DCB-FQ1170X02-1	CABLE ASSEMBLY	
	JCS-AD010JX01-1	CONNECTOR	
	JTM-BL001JX01	CONNECTOR	
	JTM-BP001JX01	CONNECTOR	
C1	CFT-AK220P50V	FXD COAXIAL 220PF +100%, -0% 50V	
C2	CSM-TG1U50V	FXD CER 1μF +80%, -20% 50V	
CB3	DCB-FF3828X14-1	CABLE ASSEMBLY	
CB4	DCB-FF3828X09-1	CABLE ASSEMBLY	
CB6	DCB-FF0971X12A-1	CABLE ASSEMBLY	
CB7	DCB-FF0971X11A-1	CABLE ASSEMBLY	
CB8	DCB-FF0971X09A-1	CABLE ASSEMBLY	
CB9	DCB-FF3828X06-1	CABLE ASSEMBLY	
CB10	DCB-FF3828X06-1	CABLE ASSEMBLY	
CB11	DCB-FQ3829X01-1	CABLE ASSEMBLY	
CB12	DCB-QR3831X01-1	CABLE ASSEMBLY	
FL1	DNF-001052	EMI FILTER	
FL32	DNF-001052	EMI FILTER	
FL40	DEE-001830	4GHz COAXIAL LPF	
J1	JCF-AF001JX09	CONNECTOR	
J2	JCF-AC001JX02	CONNECTOR	
J9	JCF-AC001JX02	CONNECTOR	
J10	JCI-AF003JX05-3	CONNECTOR	
J11	JCS-AV004JX01	CONNECTOR	
J12	JCR-AE010JX02	CONNECTOR	
J13	YEE-000734-1	CONNECTOR	
L1	LCL-B00820	COIL 33μH ±10%	
OS1	DXY-001664	TOP-1244 YTO (CUSTOM DEVICE)	

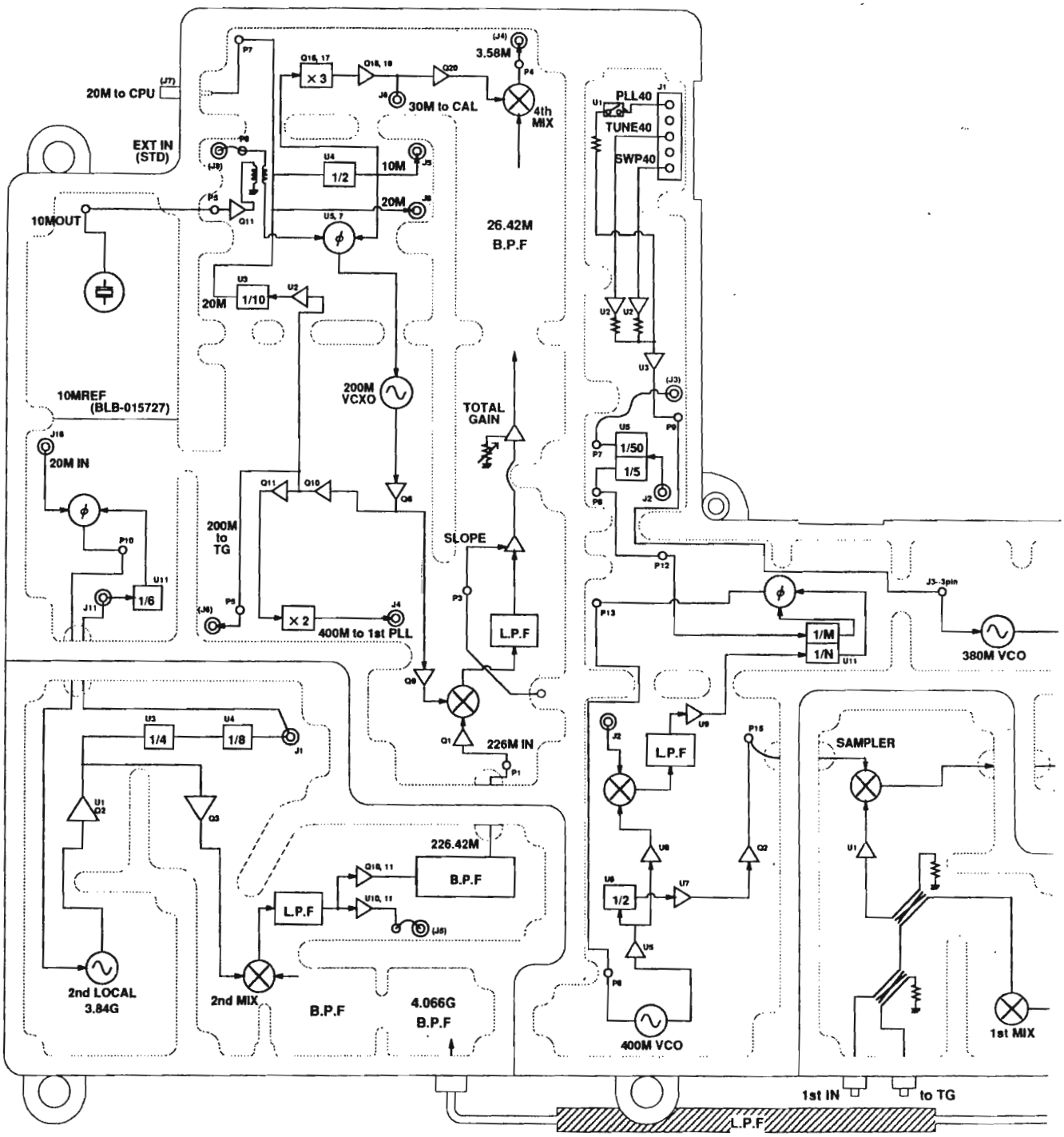
20M to CPU
EXT IN (STD)
10MOUT
10MREF (BLB-015727)
20M IN
3.58M
30M to CAL
4th MIX
10M
20M
26.42M B.P.F
PLL40
TUNE40
SWP40
200M VCXO
TOTAL GAIN
SLOPE
L.P.F
200M to TG
400M to 1st PLL
226M IN
380M VCO
SAMPLER
1st MIX
226.42M
B.P.F
2nd LOCAL 3.84G
2nd MIX
4.066G B.P.F
400M VCO
1st IN
to TG
L.P.F

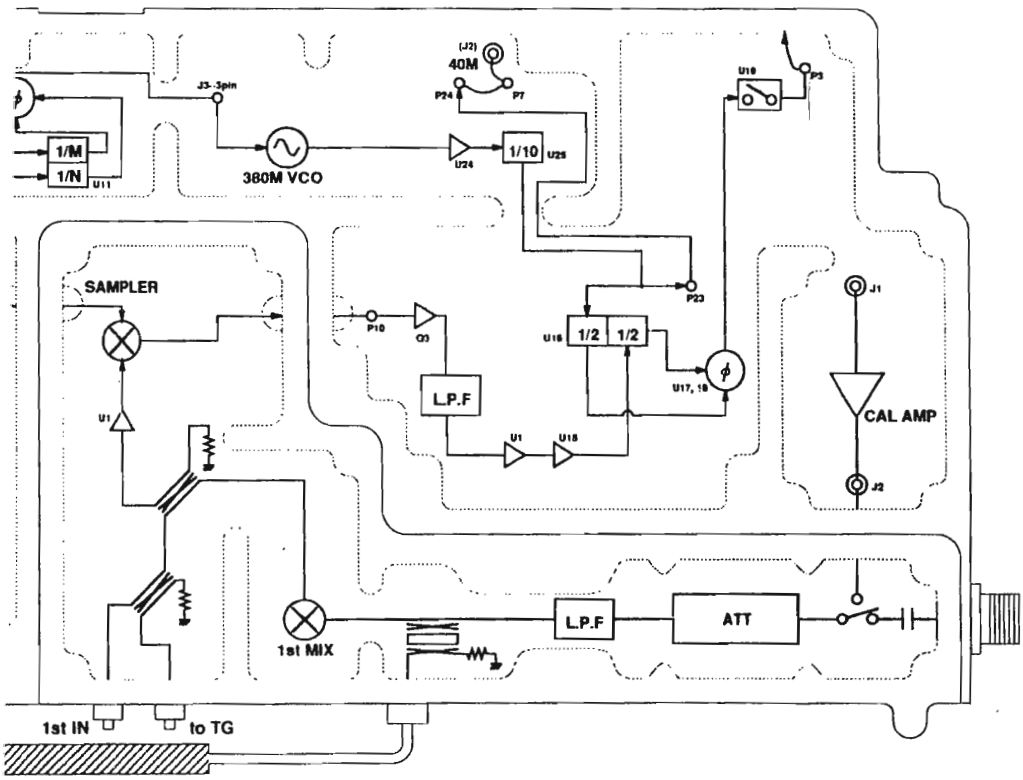

CIRCUIT LAYOUT
RF BLOCK 1
WBL-3261RF
WBL-3361RF
BLB-015646
BTB-016118
BLC-015650
BLG-015645
BCK-015649
BTB-015641
BTB-015642
BTB-015644

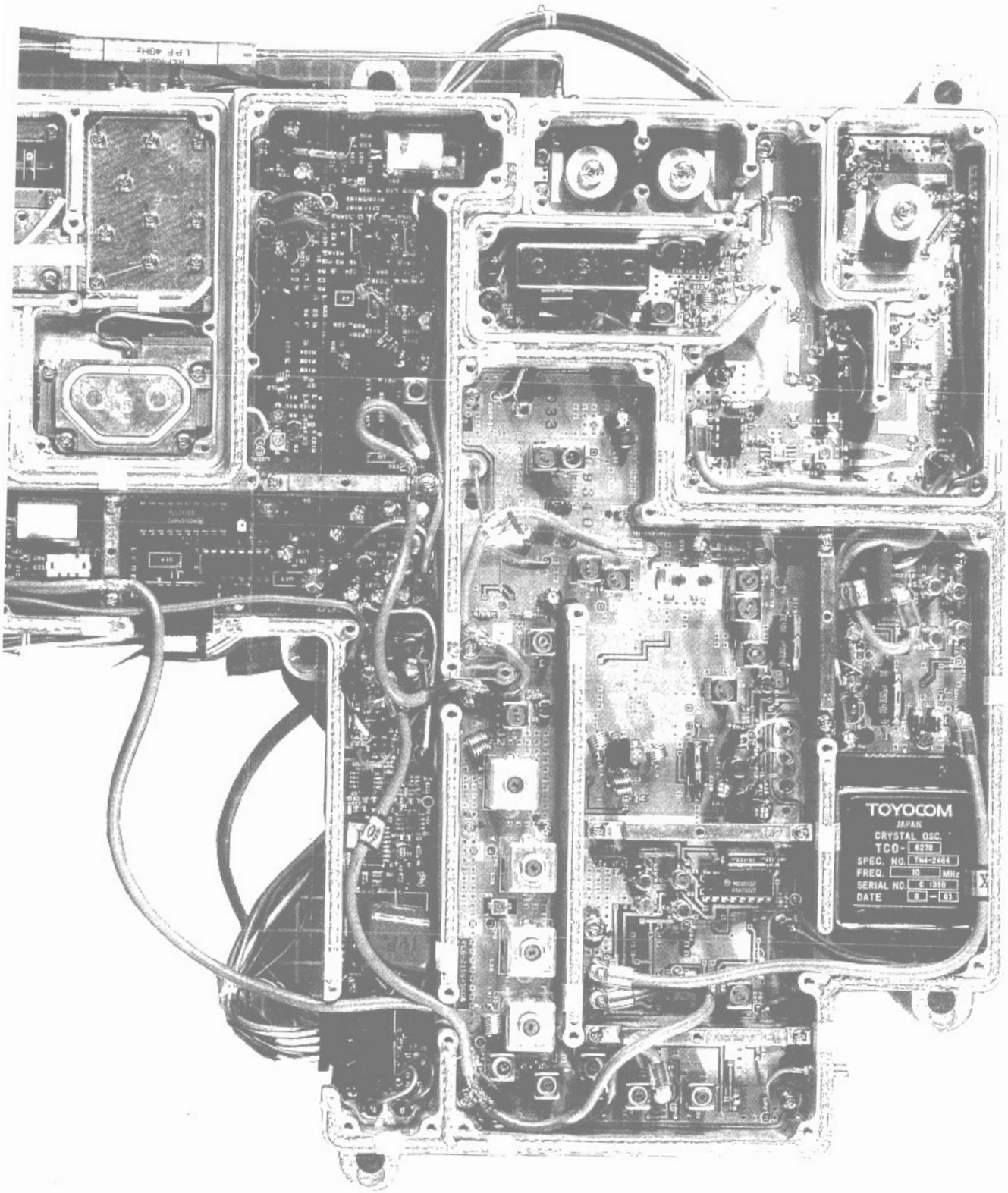
TOYOCOM
JAPAN
CRYSTAL OSC.
TCO-
SPEC. NO.
FREQ.
MHz
SERIAL NO.
DATE

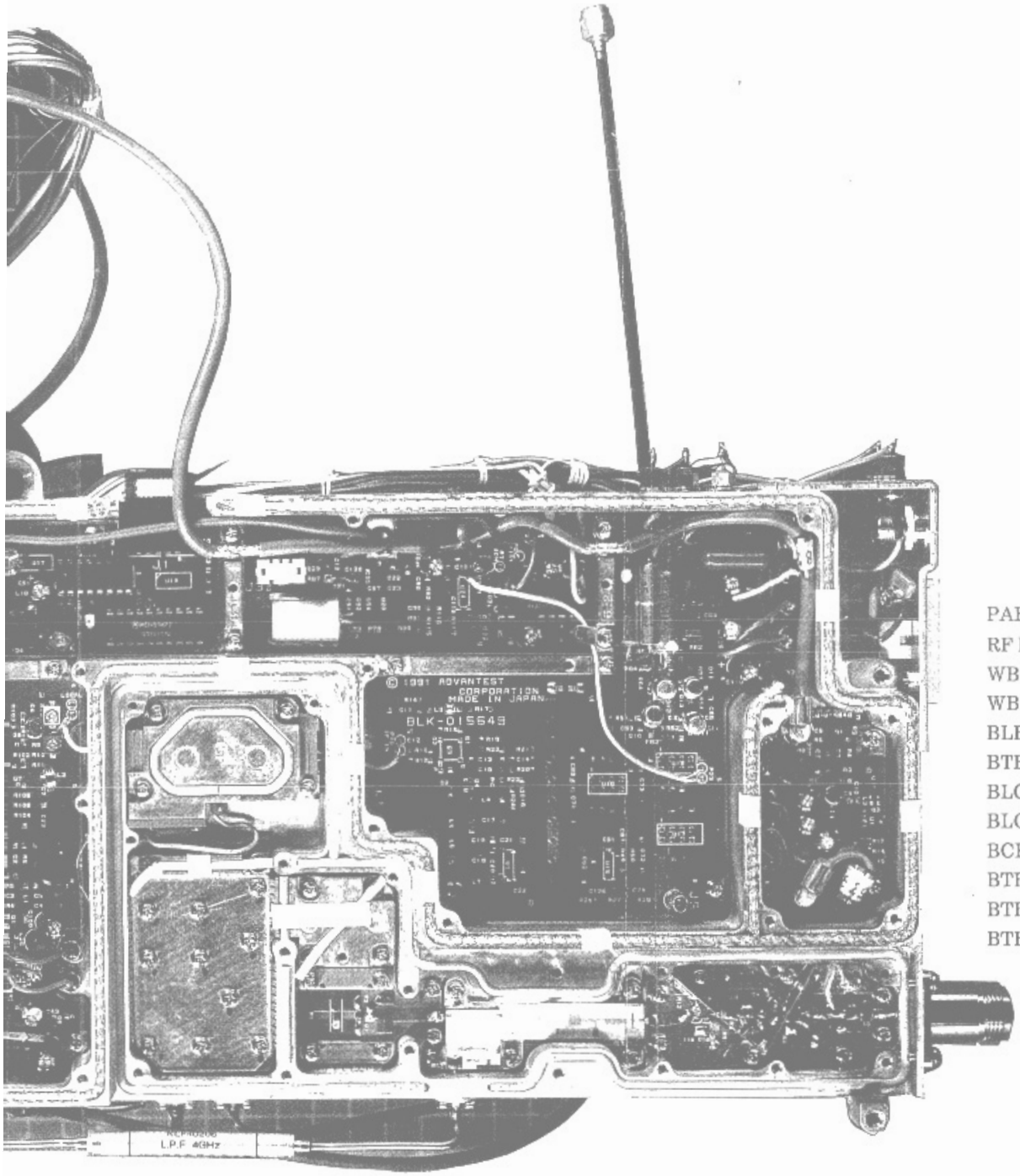

PARTS LOCATION
RF BLOCK 1
WBL-3261RF
WBL-3361RF
BLB-015646
BTB-016118
BLC-015650
BLG-015645
BCK-015649
BTB-015641
BTB-015642
BTB-015644

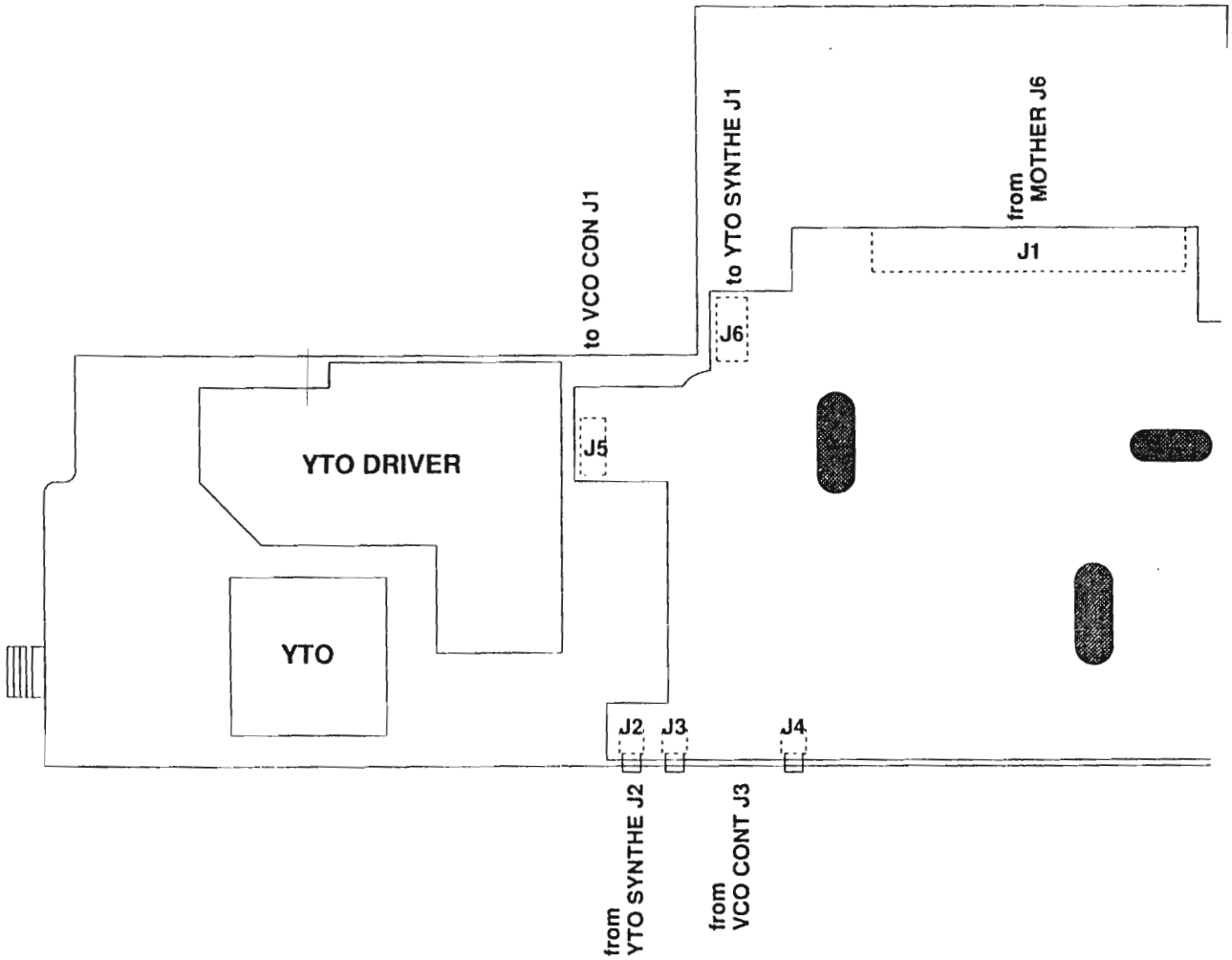
YTO DRIVER
YTO
J5
J6
J1
J2
J3
J4
to VCO CON J1
to YTO SYNTHE J1
from MOTHER J6
from YTO SYNTHE J2
from VCO CONT J3

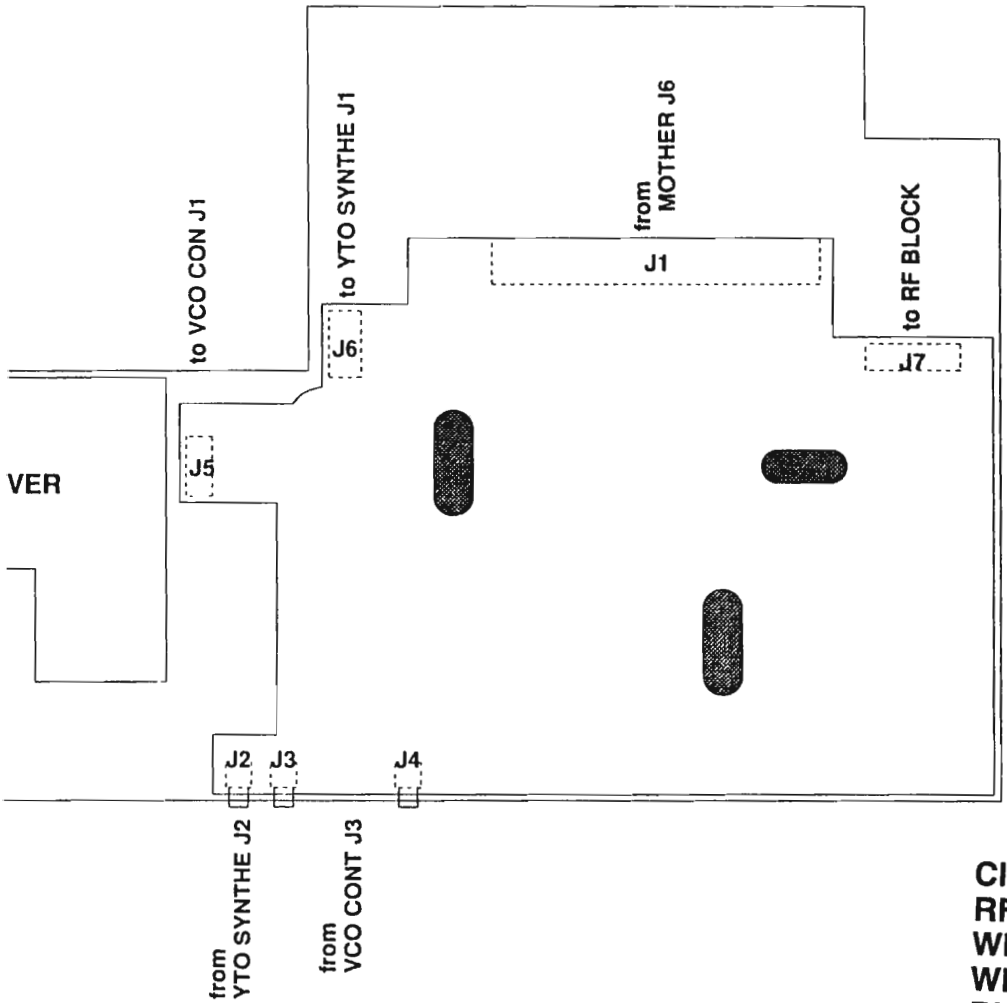

CIRCUIT LAYOUT
RF BLOCK 2
WBL-3261RF
WBL-3361RF
BLB-015727

FF0971
FF0971
TOP1244
YTO FREQ 38.8 2GHz
SER 310123
MFD BY ADVANTEST
TOKYO JAPAN
© 1988 ADVANTEST CORPORATION
MADE IN JAPAN

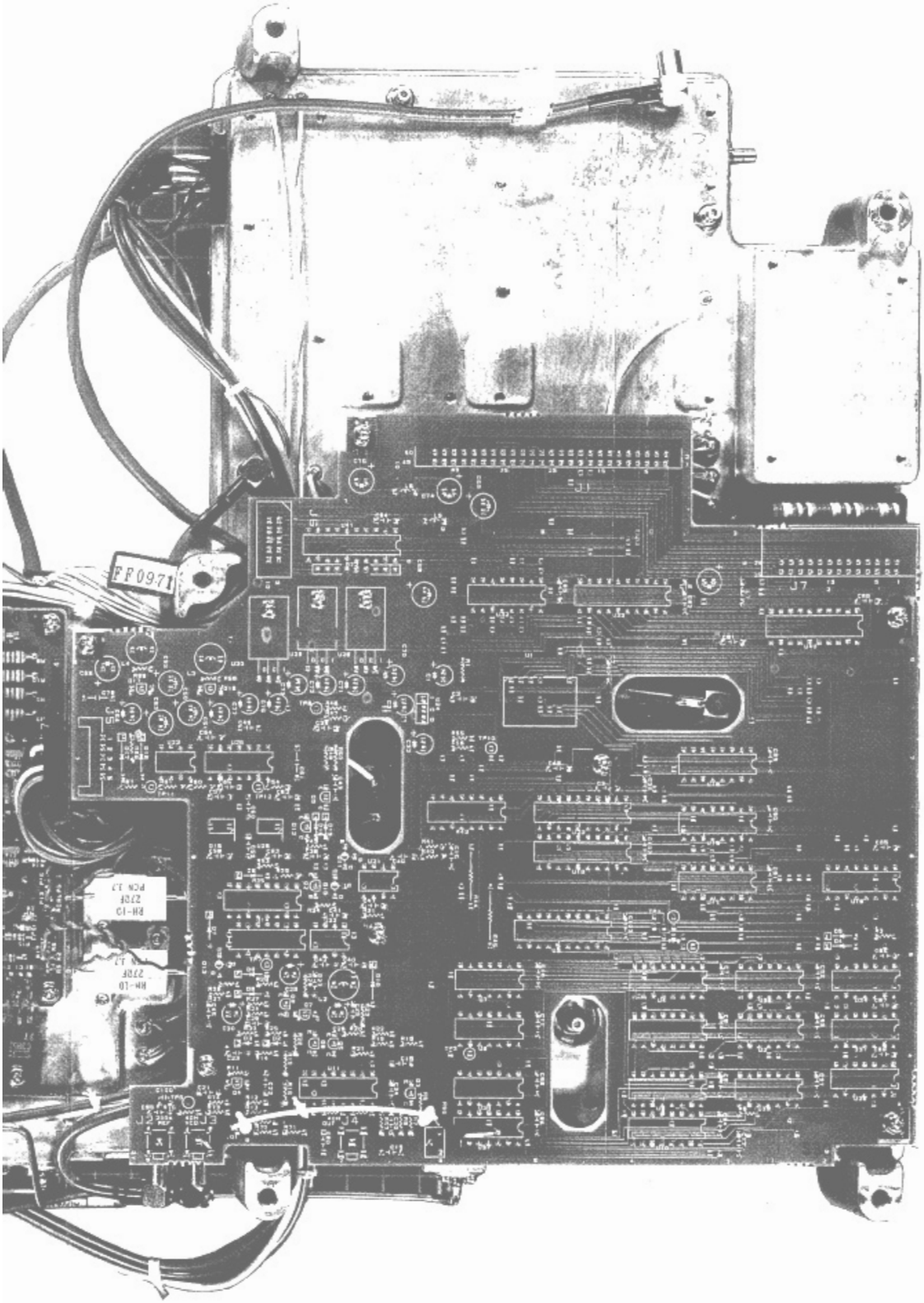

PARTS LOCATION
RF BLOCK 2
WBL-3261RF
WBL-3361RF
BLB-015727

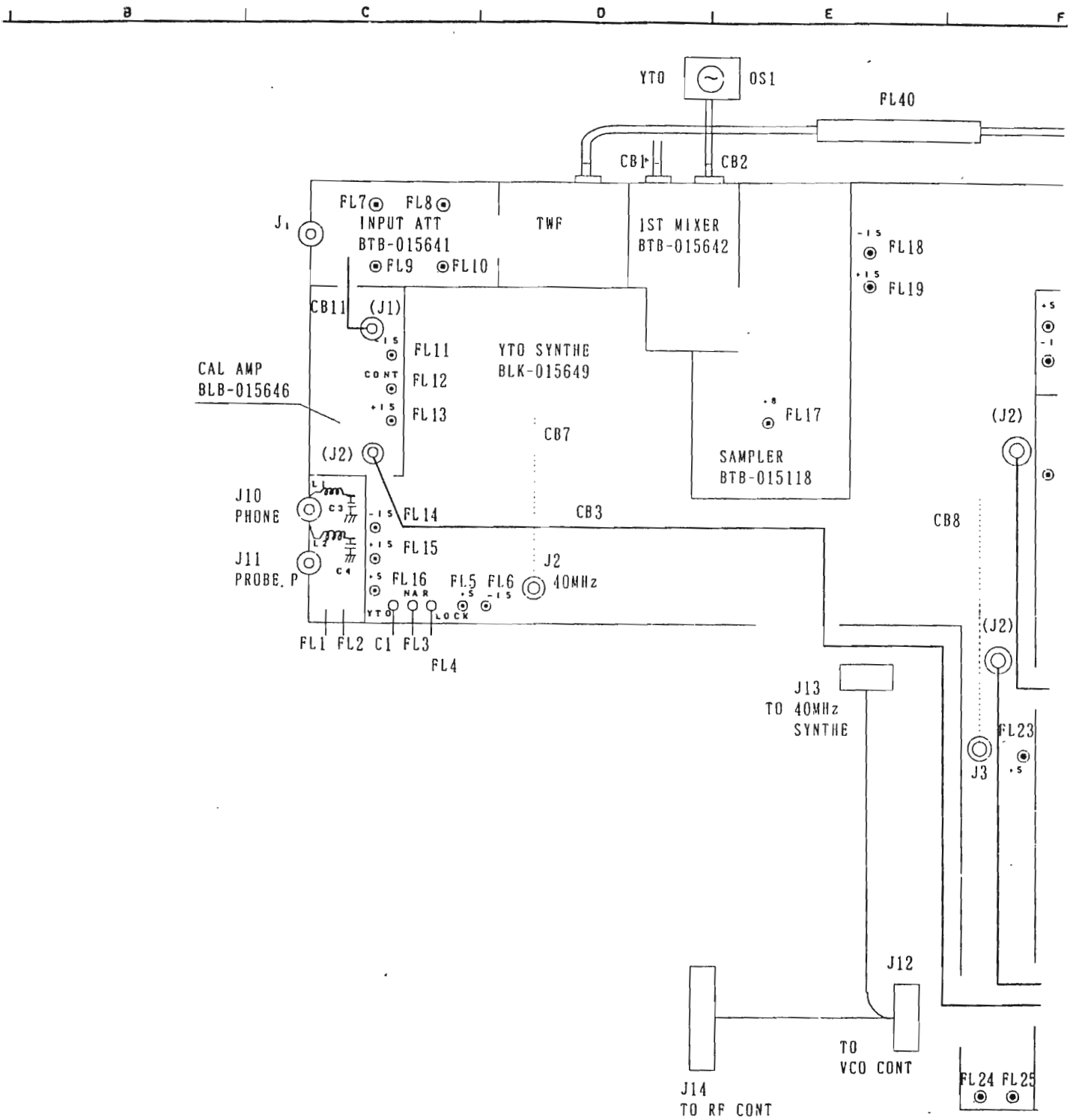
B
C
D
E
F
YTO
OS1
FL40
CB1
CB2
FL7
FL8
INPUT ATT
BTB-015641
FL9
FL10
TWF
1ST MIXER
BTB-015642
FL18
FL19
J1
CB11
(J1)
FL11
YTO SYNTHE
BLK-015649
CAL AMP
BLB-015646
CONT
FL12
FL13
FL17
CB7
(J2)
SAMPLER
BTB-015118
J10
PHONE
FL14
CB3
CB8
J11
PROBE. P
FL15
J2
40MHz
FL16
FL5
FL6
NAR
YTO
LOCK
FL1
FL2
C1
FL3
FL4
J13
TO 40MHz
SYNTHE
FL23
J3
J12
TO
VCO CONT
J14
TO RF CONT
FL24
FL25

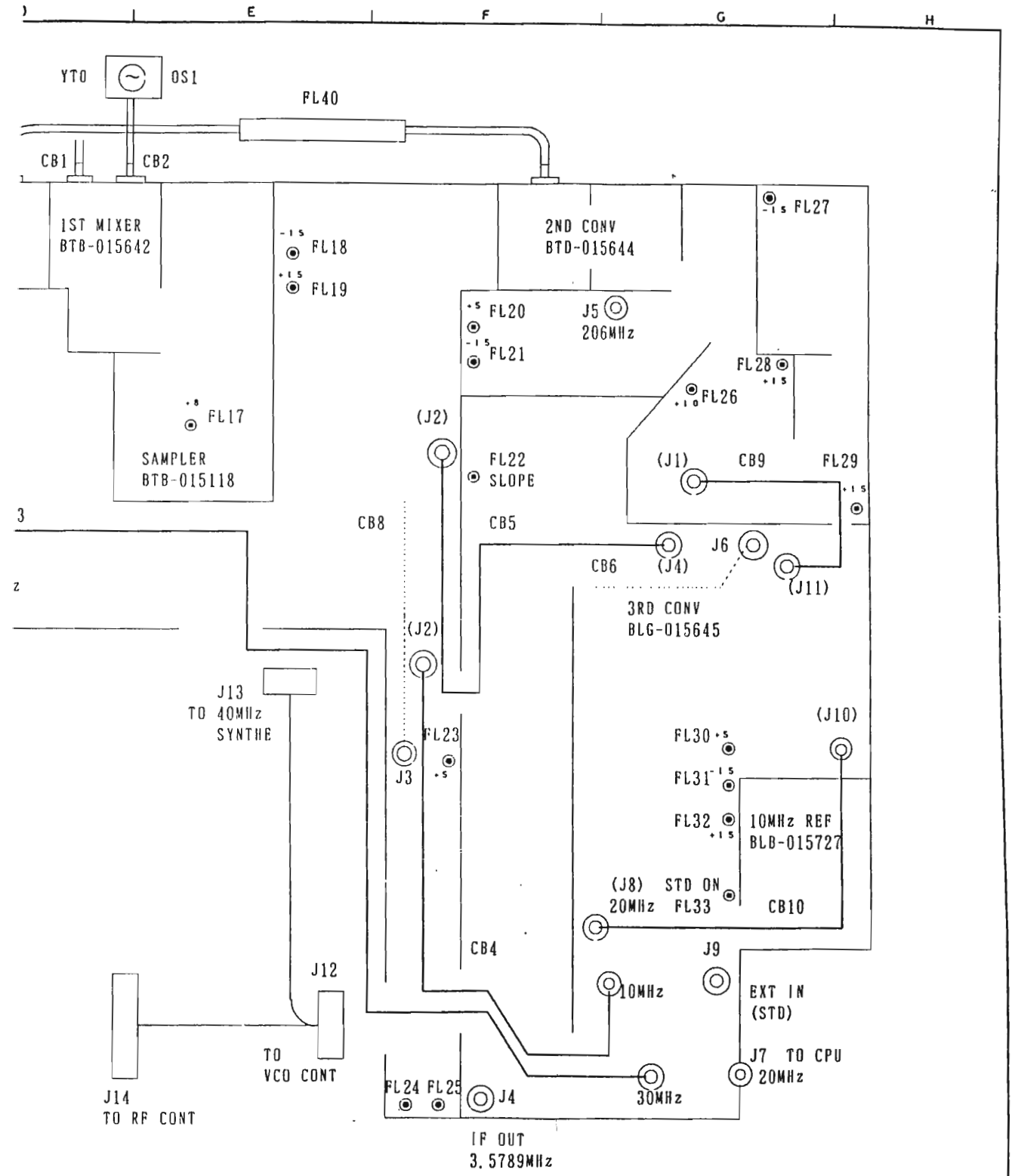

R3261/3361 RF BLOCK
WBL-3361RF

R3261/3361
CAL AMP
BLB-015646 (1/1)

Parts No.	Advantest Stock No.	Description					Note
C1	CCK-BX10U25V	FXD	ELECT	10μF	±20%	25V	
C3	CCP-BAR01U50V	FXD	CHIP	0.01μF	±10%	50V	
C5	CCK-BX10U25V	FXD	ELECT	10μF	±20%	25V	
C6	CCP-BAR01U50V	FXD	CHIP	0.01μF	±10%	50V	
C7	CCP-BBR1U50V	FXD	CHIP	0.1μF	±20%	50V	
C10	CCP-BAR01U50V	FXD	CHIP	0.01μF	±10%	50V	
C11	CCP-AV120PR1K	FXD	CHIP	120PF	+80%, -20%	100V	
C13	CCP-BAR01U50V	FXD	CHIP	0.01μF	±10%	50V	
J1	JCF-BA001JX01	CONNECTOR					
L1	LCL-C00010	COIL		180μH	±10%		
L3	LCL-E00944	COIL	CHIP	220nH	±10%		
L4	LCL-E00948	COIL	CHIP	0.39μH	±20%		
L5	LCL-E00944	COIL	CHIP	220nH	±10%		
Q1	STN-2SC3356	TRANSISTOR	NPN				
Q3	STN-2SC1623	TRANSISTOR	NPN				
R1	RCP-AN51	FXD	CHIP	51Ω	±0.5%	1/10W	
R3	RCP-AJ51	FXD	CHIP	51Ω	±5%	1/10W	
R5	RCP-AJ390	FXD	CHIP	390Ω	±5%	1/10W	
R6	RCP-AJ51	FXD	CHIP	51Ω	±5%	1/10W	
R7	RCP-AJ5R6K	FXD	CHIP	5.6kΩ	±5%	1/10W	
R8	RCP-AJ10K	FXD	CHIP	10kΩ	±5%	1/10W	
R9	RCP-AN68	FXD	CHIP	68Ω	±0.5%	1/10W	
R10	RCP-AN130	FXD	CHIP	130Ω	±0.5%	1/10W	
R11	RCP-AN68	FXD	CHIP	68Ω	±0.5%	1/10W	
R12	RCP-AN4R3K	FXD	CHIP	4.3kΩ	±0.5%	1/10W	
R13	RCP-AN2R7K	FXD	CHIP	2.7kΩ	±0.5%	1/10W	
R14	RCP-AN1K	FXD	CHIP	1kΩ	±0.5%	1/10W	
R15	RCP-AN1R2K	FXD	CHIP	1.2kΩ	±0.5%	1/10W	
R16	RVR-DF100	VAR		100Ω	±20%	1/2W	
R17	RCP-AN16K	FXD	CHIP	16kΩ	±0.5%	1/10W	
R18	RVR-DF2K	VAR		2kΩ	±20%	1/2W	
R19	RCP-AN15K	FXD	CHIP	15kΩ	±0.5%	1/10W	
R20	RCP-AN100K	FXD	CHIP	100kΩ	±0.5%	1/10W	
U1	SIA-OP07PS	OP AMP VLTRA-LOW OFFSET					

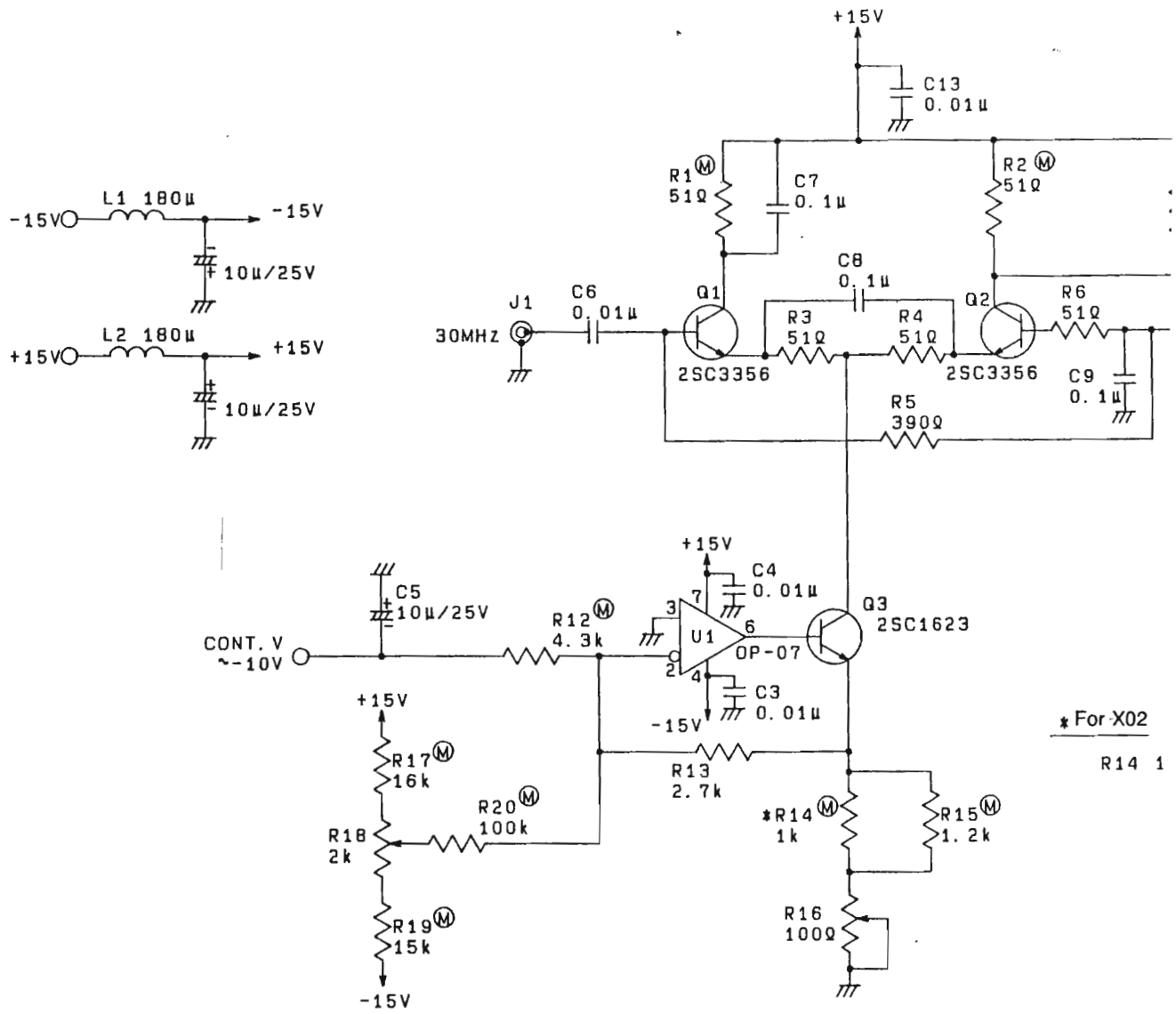
+15V
C13
0.01μ
R1 Ⓜ
51Ω
C7
0.1μ
R2 Ⓜ
51Ω
L1 180μ
-15V
-15V
10μ/25V
C8
0.1μ
J1
C6
0.01μ
Q1
Q2
R6
51Ω
30MHz
R3
51Ω
R4
51Ω
L2 180μ
+15V
+15V
2SC3356
2SC3356
C9
0.1μ
10μ/25V
R5
390Ω
+15V
C4
0.01μ
C5
10μ/25V
R12 Ⓜ
4.3k
Q3
2SC1623
CONT. V
~-10V
U1
OP-07
C3
0.01μ
+15V
-15V
R17 Ⓜ
16k
R13
2.7k
R20 Ⓜ
100k
*R14 Ⓜ
1k
R15 Ⓜ
1.2k
R18
2k
R19 Ⓜ
15k
R16
100Ω
-15V

* For X02

R14 1

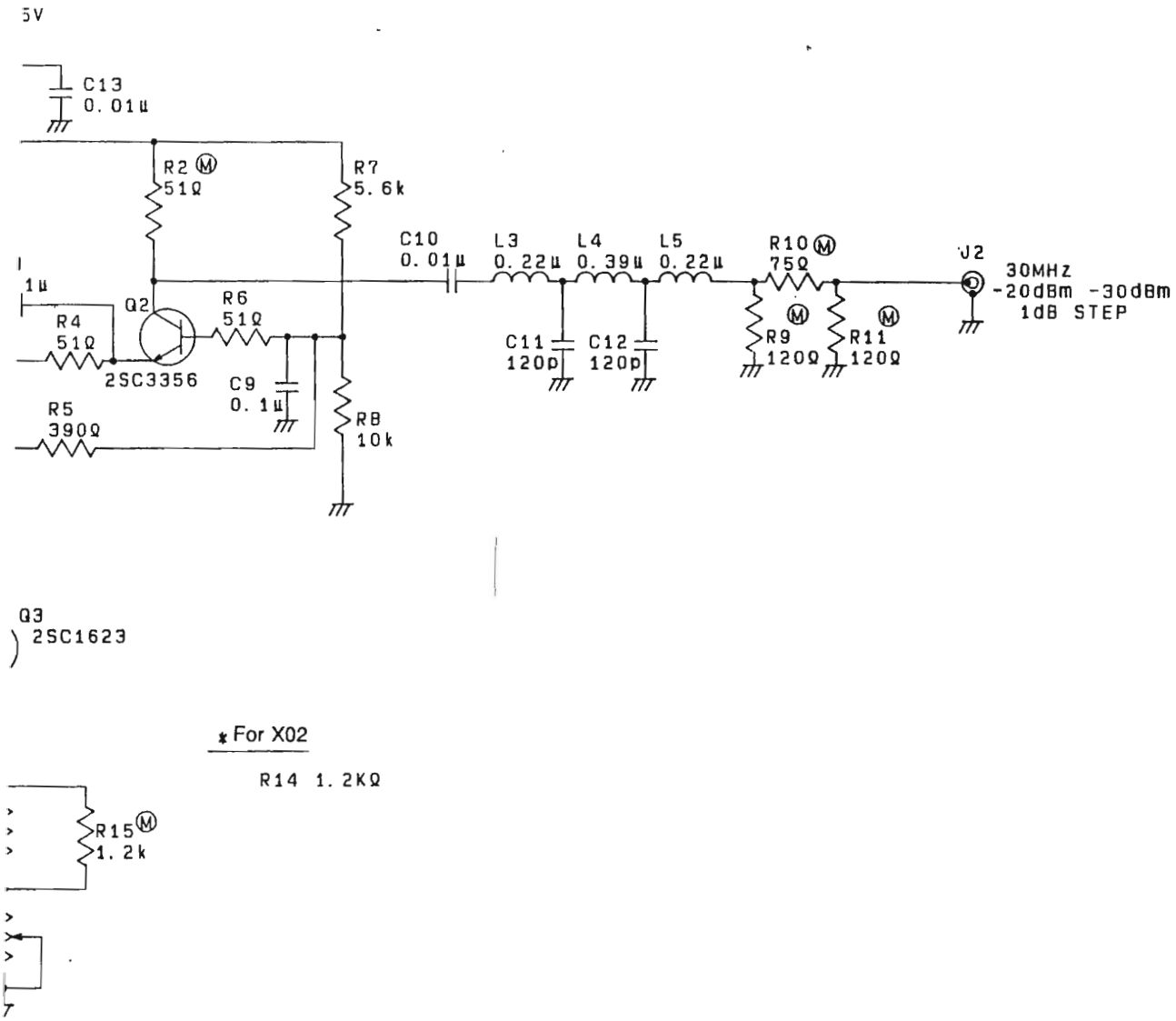

R3261/3361 CAL AMP
BLB-015646

R3261/3361
YTO DRIVER
BLQ-015647 (1/2)

Parts No.	Advantest Stock No.	Description					Note
C1	CSM-AGR1U50V	FXD	CER	0.1µF	+80%, -20%	50V	
C2	CSM-AC33P50V	FXD	CER	33PF	±10%	50V	
C3	CFM-ASR047U50V	FXD	FILM	0.047µF	±10%	50V	
C4	CSM-AGR1U50V	FXD	CER	0.1µF	+80%, -20%	50V	
C5	CCK-AR100U25V	FXD	ELECT	100µF	±20%	25V	
C6	CCK-AA470U10V	FXD	ELECT	470µF	±20%	10V	
C8	CSM-AC1000P50V	FXD	CER	1000PF	±10%	50V	
C9	CCK-AR33U16V	FXD	ELECT	33µF	±20%	10V	
C10-11	CCK-AR10U25V	FXD	ELECT	10µF	±20%	25V	
C12	CSM-AGR1U50V	FXD	CER	0.1µF	+80%, -20%	50V	
C13	CSM-AC1000P50V	FXD	CER	1000PF	±10%	50V	
C14	CSM-AG1U50V	FXD	CER	1µF	+80%, -20%	50V	
C15-16	CSM-AGR1U50V	FXD	CER	0.1µF	+80%, -20%	50V	
C17	CSM-AG1U50V	FXD	CER	1µF	+80%, -20%	50V	
C18	CCK-AR10U25V	FXD	ELECT	10µF	±20%	25V	
C19-20	CSM-AG1U50V	FXD	CER	1µF	+80%, -20%	50V	
C21	CCK-AR10U25V	FXD	ELECT	10µF	±20%	25V	
C22- 23	CCK-AR47U25V	FXD	ELECT	47µF	±20%	25V	
C25	CTA-AC10U25V	FXD	TA	10µF	±20%	25V	
C26	CSM-AFR1U50V	FXD	CER	0.1µF	±5%	50V	
C27	CSM-AFR1U50V	FXD	CER	0.1µF	±5%	50V	
C28	CSM-BA2200P50V	FXD	CER	2200PF	±5%	50V	
C29	CSM-BA2200P50V	FXD	CER	2200PF	±5%	50V	
C30	CTA-AC10U25V	FXD	TA	10µF	±20%	25V	
C31	CSM-BA2200P50V	FXD	CER	2200PF	±5%	50V	
C32	CSM-BA2200P50V	FXD	CER	2200PF	±5%	50V	
C33	CTA-AC10U25V	FXD	TA	10µF	±20%	25V	
D1	SDZ-W130	ZENER	DIODE				
D2-4	SDS-LD1	DIODE SI					
D5	SDZ-D120	ZENER	DIODE				
D6	SDZ-D056	ZENER	DIODE				
J1	JCR-AF026PX02	CONNECTOR					
L1-2	LCL-C00358	COIL	(CUSTOM	DEVICE)			
Q1	STN-2SC2983	TRANSISTOR	NPN				
Q2	STP-2SA225	TRANSISTOR	PNP				
Q3	STN-2SC1815	TRANSISTOR	NPN				
Q6-7	SFN-2N4393-18	FET	N-JUNCTION				
Q8	STN-2SC2983	TRANSISTOR	NPN				
Q9	STP-2SA642-33	TRANSISTOR	PNP				
Q10-11	STN-2SC1983	TRANSISTOR	NPN				
Q12	STN-2SC1815	TRANSISTOR	NPN				
Q13	STP-2SA1225	TRANSISTOR	PNP				
Q14	STP-2SA1015	TRANSISTOR	PNP				
Q15	STN-2SC2983	TRANSISTOR	NPN				
R1	RCB-AG4R7K	FXD	CAR	4.7KΩ	±5%	1/8W	
R2	RCB-AK33	FXD	CAR	33Ω	±5%	1/2W	
R3	RCB-AG4R7K	FXD	CAR	4.7KΩ	±5%	1/8W	
R4	RMF-AR2R2KFK	FXD	METAL	2.2KΩ	±1%	1/4W	
R5	RCB-AK33	FXD	CAR	33Ω	±5%	1/2W	
R6	RCB-AG1K	FXD	CAR	1KΩ	±5%	1/8W	

R3261/3361
YTO DRIVER
BLQ-015647 (2/2)

Parts No.	Advantest Stock No.	Description					Note
R7-9	RMF-AS100QFK	FXD	METAL	100Ω	±1%	1/2W	
R10	RMF-AS100QFK	FXD	METAL	100Ω	±1%	1/2W	
R11	RCB-AG10K	FXD	CAR	10KΩ	±5%	1/8W	
R12	RCB-AG100K	FXD	CAR	100KΩ	±5%	1/8W	
R13	RCB-AH120	FXD	CAR	120Ω	±5%	1/4W	
R14	RCB-AG100K	FXD	CAR	100KΩ	±5%	1/8W	
R15	RCB-AH220	FXD	CAR	220Ω	±5%	1/4W	
R16	RCB-AG220	FXD	CAR	220Ω	±5%	1/8W	
R17	RCB-AG1K	FXD	CAR	1KΩ	±5%	1/8W	
R25	RMF-AB8R2KFJ	FXD	METAL	8.2KΩ	±1%	1/4W	
R26	RVR-CD1K	VAR	CERMET	1KΩ	±20%	1/2W	
R27	RMF-AC100KFJ	FXD	METAL	100KΩ	±1%	1/4W	
R28	RMF-AB10KFG	FXD	METAL	10KΩ	±1%	1/4W	
R29	RCB-AH220	FXD	CAR	220Ω	±5%	1/4W	
R30	RCB-AG220	FXD	CAR	220Ω	±5%	1/8W	
R31	RCB-AG1K	FXD	CAR	1KΩ	±5%	1/8W	
R32	RCB-AG4R7K	FXD	CAR	4.7KΩ	±5%	1/8W	
R33-34	RMF-AC10KFJ	FXD	METAL	10KΩ	±1%	1/4W	
R35-36	RMF-AC12KFJ	FXD	METAL	12KΩ	±1%	1/4W	
R37	RCB-AG560	FXD	CAR	560Ω	±5%	1/8W	
R38-39	RMF-AC20KFJ	FXD	METAL	20KΩ	±1%	1/4W	
R40-41	RMF-AC10KFJ	FXD	METAL	10KΩ	±1%	1/4W	
R42	RCB-AG1K	FXD	CAR	1KΩ	±5%	1/8W	
R43	RCB-AK150	FXD	CAR	150Ω	±5%	1/8W	
R51-52	RPW-AC27-4	FXD	THERMAL	27Ω	±5%	10W	
R55	RCB-AG1R2K	FXD	CAR	1.2KΩ	±5%	1/8W	
R56	RCB-AG10K	FXD	CAR	10KΩ	±5%	1/8W	
R57	RCB-AG10K	FXD	CAR	10KΩ	±5%	1/8W	
R58	RCB-AG2R2K	FXD	CAR	2.2KΩ	±5%	1/8W	
R59	RCB-AG5R6K	FXD	CAR	5.6KΩ	±5%	1/8W	
R60	RVR-DF1K	VAR	CERMET	1KΩ	±20%	1/2W	
R61	RCB-AG3R3K	FXD	CAR	3.3KΩ	±5%	1/8W	
R62	RMF-AC10KFJ	FXD	METAL	10KΩ	±1%	1/4W	
R63	RMF-AC10KFJ	FXD	METAL	10KΩ	±1%	1/4W	
R64	RCB-AG2R2K	FXD	CAR	2.2KΩ	±5%	1/8W	
U1	SIA-5534A-1	OP AMP LOW NOISE, HIGH-SPEED, WIDE RANGE					
U3	SIA-OP07P	OP AMP LOW OFFSET					
U4	SIA-TL072-1	OP AMP DUAL LOW NOISE					
U5	SIA-TL072	OP AMP DUAL LOW NOISE					

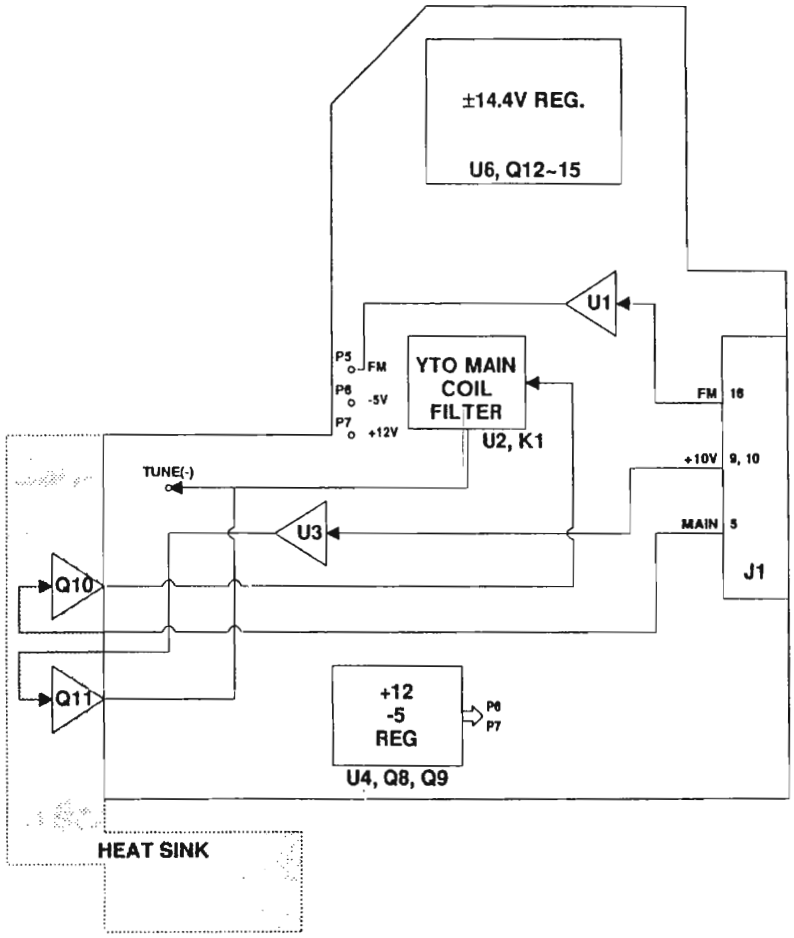

CIRCUIT LAYOUT
YTO DRIVER
BLB-015647

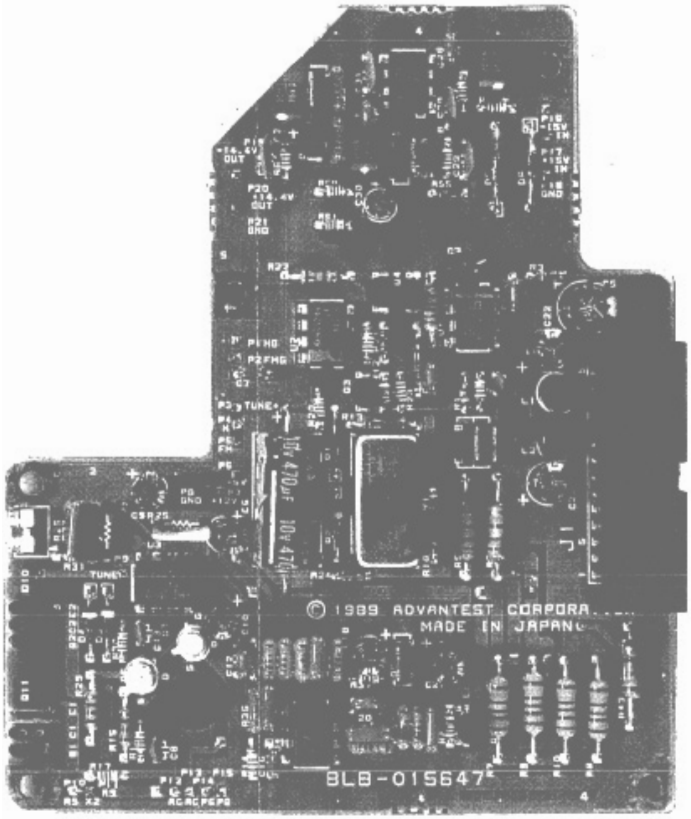

PARTS LOCATION
YTO DRIVER
BLB-015647

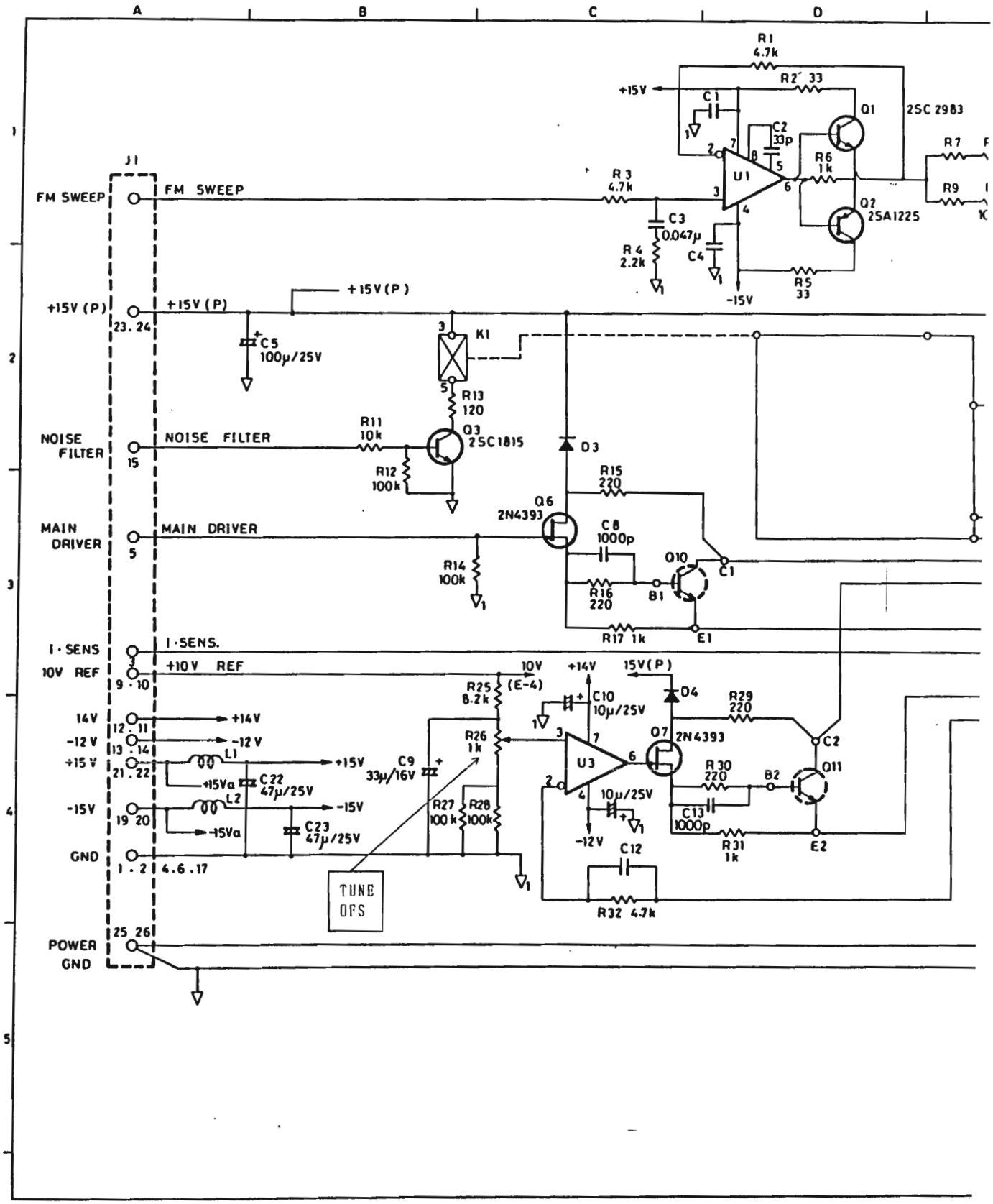
A
B
C
D
J1
FM SWEEP
FM SWEEP
+15V (P)
+15V (P)
+15V (P)
23. 24
NOISE FILTER
NOISE FILTER
15
MAIN DRIVER
MAIN DRIVER
5
I·SENS
I·SENS.
10V REF
+10V REF
9 · 10
14V
+14V
-12 V
-12 V
13 · 14
+15 V
+15V
21 . 22
-15V
-15V
19 20
GND
1 · 2 4.6 .17
POWER GND
25 26
R1 4.7k
R2 33
+15V
C1
C2 33p
Q1
2SC 2983
R6 1k
R7
R9
U1
R3 4.7k
C3 0.047μ
R4 2.2k
C4
Q2 2SA1225
R5 33
-15V
C5 100μ/25V
K1
R13 120
R11 10k
Q3 2SC1815
R12 100k
D3
R15 220
Q6 2N4393
C8 1000p
R14 100k
Q10
R16 220
B1
C1
R17 1k
E1
R25 8.2k
(E-4)
10V
+14V
15V(P)
C10 10μ/25V
D4
R29 220
R26 1k
U3
Q7 2N4393
C2
L1
+15V
C9 33μ/16V
+15Va
C22 47μ/25V
R30 220
B2
Q11
L2
-15V
R27 100k
R28 100k
10μ/25V
C13 1000p
-15Va
C23 47μ/25V
-12V
R31 1k
E2
C12
TUNE OFS
R32 4.7k

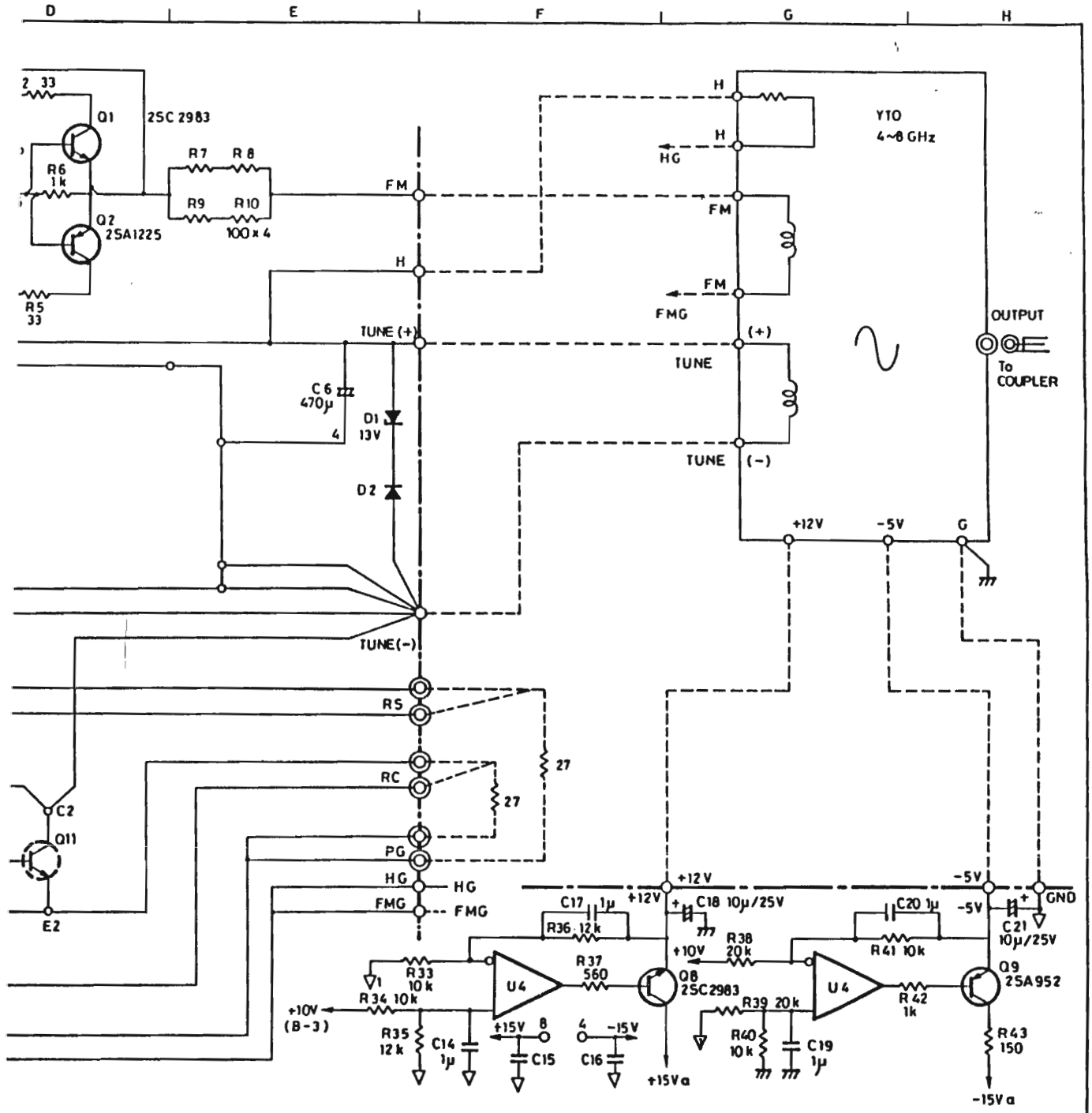

R3261/3361 YTO DRIVER
BLB-015647 1/2

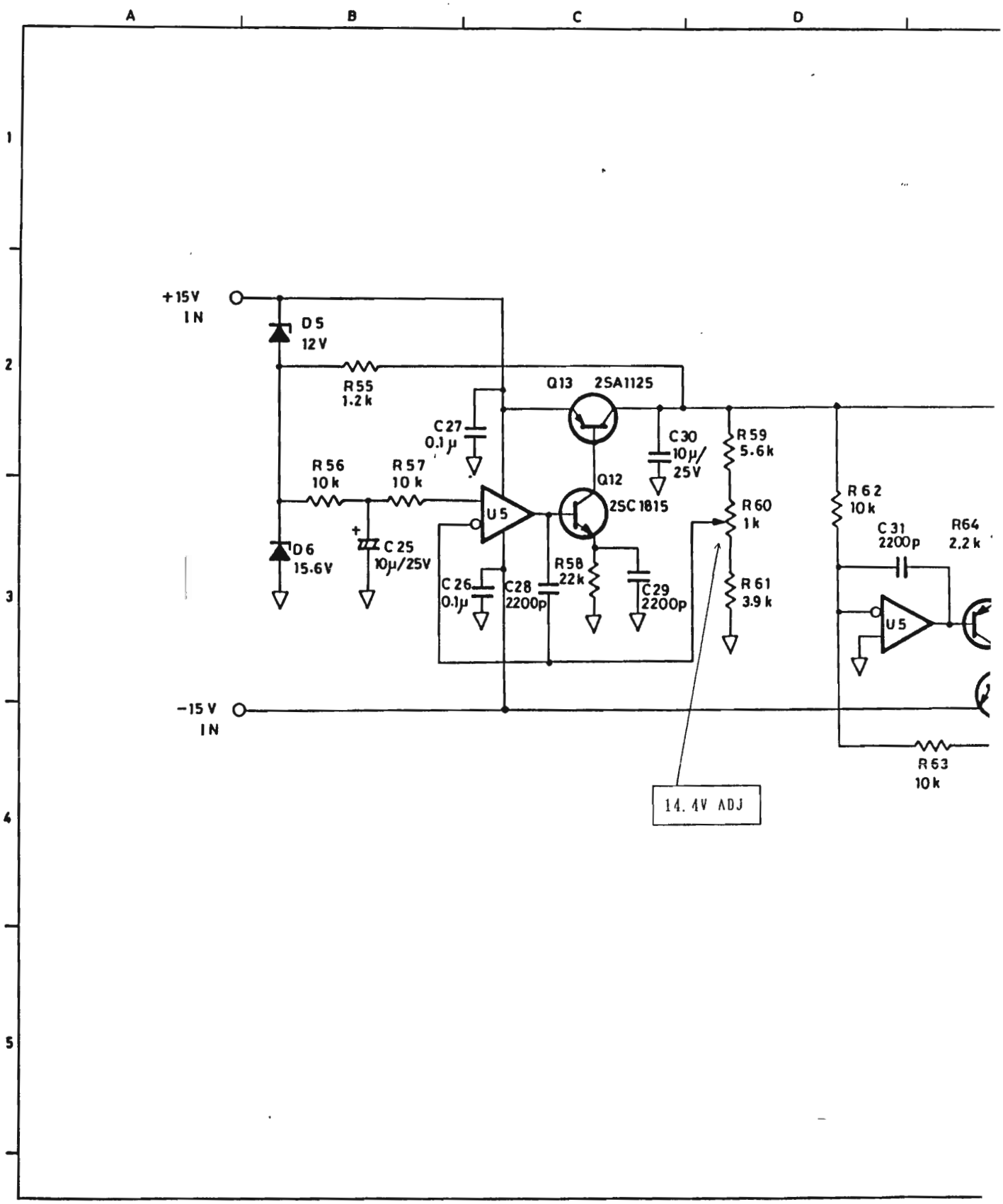
A
B
C
D
1
2
3
4
5
+15V
IN
D5
12V
R55
1.2k
Q13
2SA1125
C27
0.1μ
C30
10μ/
25V
R59
5.6k
R56
10k
R57
10k
Q12
2SC1815
U5
R60
1k
R62
10k
C31
2200p
R64
2.2k
D6
15.6V
C25
10μ/25V
C26
0.1μ
C28
2200p
R58
22k
C29
2200p
R61
3.9k
U5
-15V
IN
R63
10k
14.4V ADJ

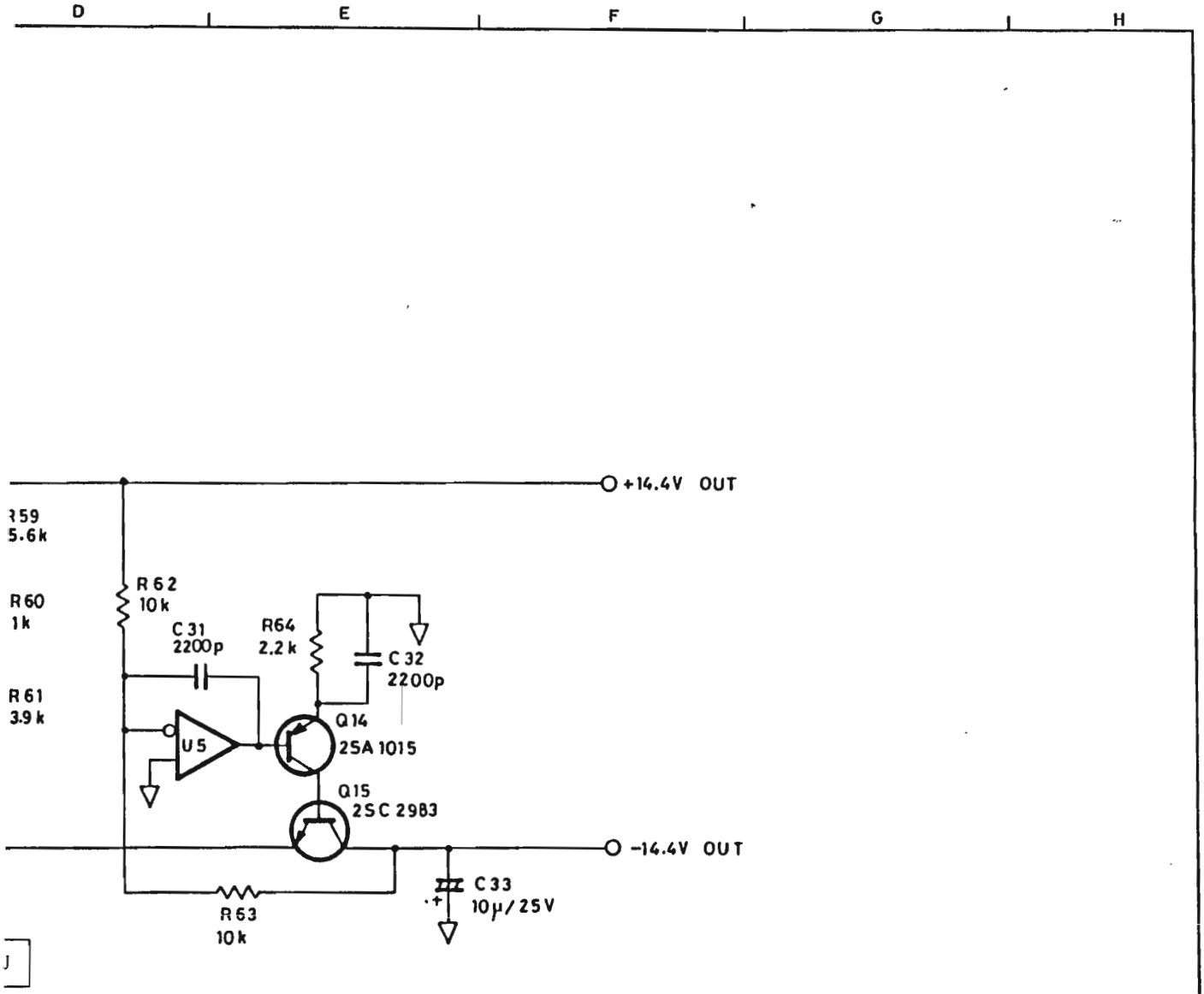

R3261/3361 YTO DRIVER (REFERENCE VOLTAGE)
BLB-015647 2/2

R3261/3361
10MHZ REF.
BLB-015727 (1/1)

Parts No.	Advantest Stock No.	Description					Note
C1	CCP-BA100P50V	FXD	CHIP	100PF	±10%	50V	
C2	CTA-AZ6R8U16V	FXD	TA	6.8μF	±20%	16V	
C3	CTA-AZ6R8U16V	FXD	TA	6.8μF	±20%	16V	
D1	SDZ-M130	ZENER DIODE					
Q1	STN-2SD1005	TRANSISTOR NPN					
R1	RCP-AJ1K	FXD	CHIP	1kΩ	±5%	1/10W	
X1	DXC-001524	CRYSTAL	10MHz				

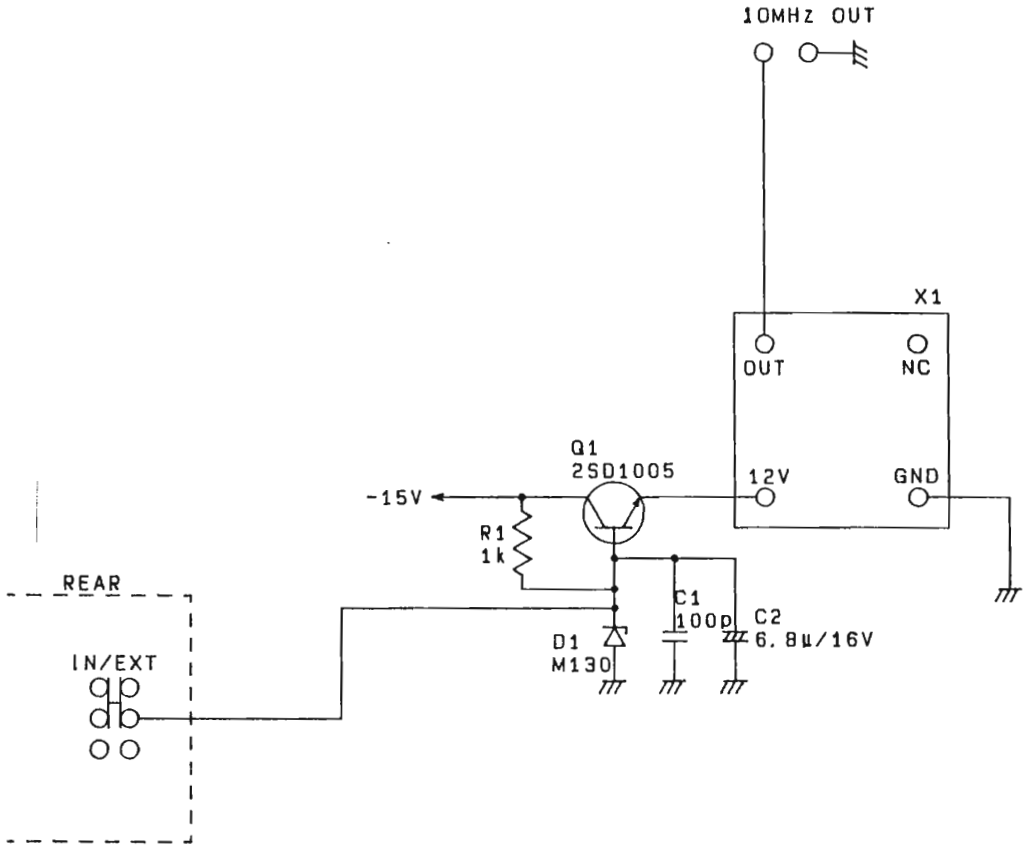

R3261/3
BLB-015

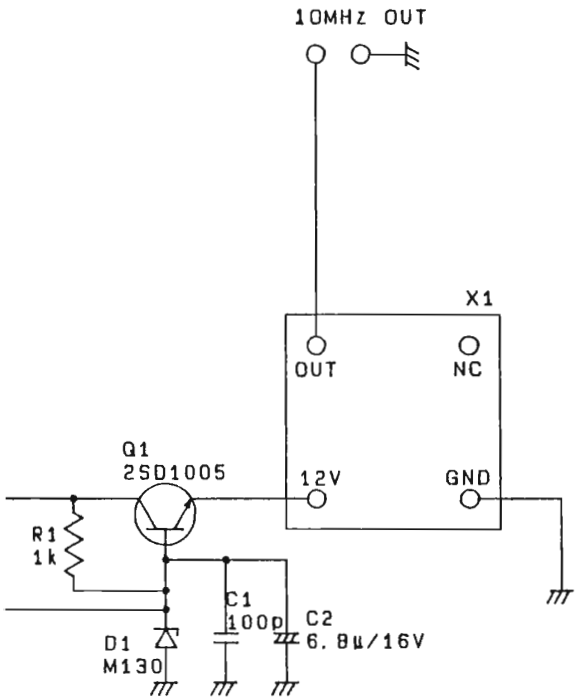

R3261/3361 10MHz REF.
BLB-015727

R3261/3361
SAMPLER
BTB-016118 (1/1)

Parts No.	Advantest Stock No.	Description					Note
C3	CCP-BA33P50V	FXD	CHIP	33PF	±5%	50V	
C4	CCP-BA2P50V	FXD	CHIP	2PF	±0.25%	50V	
C5	CCP-BA1P50V	FXD	CHIP	1PF	±0.25%	50V	
C6	CCP-ACR5P50V	FXD	CHIP	0.5PF	±0.25%	50V	
C7	CCP-BA10P50V	FXD	CHIP	10PF	±0.5%	50V	
C8	CCP-BA1000P50V	FXD	CHIP	1000PF	±10%	50V	
C9	CCP-BA5P50V	FXD	CHIP	5PF	±0.5%	50V	
D1	SDS-1SV107	Si Snap-off DIODE					
D2	SDS-ND5051	COAS SCHOTTKY BARRIER DIODE					
D3	SDZ-W120	ZENER DIODE					
L1	LCL-A00669	COIL	(CUSTOM DEVICE)				
L2	LCL-A00670	COIL	(CUSTOM DEVICE)				
R1	RCP-AJ68	FXD	CHIP	68Ω	1/10W		
R2	RCP-AJ100	FXD	CHIP	100Ω	1/10W		
R3	RCP-AJ68	FXD	CHIP	68Ω	1/10W		
R4	RCP-AJ100	FXD	CHIP	100Ω	1/10W		
R6	RCP-AJ68	FXD	CHIP	68Ω	1/10W		
R7	RCP-AJ100	FXD	CHIP	100Ω	1/10W		
R8	RCP-AJ68	FXD	CHIP	68Ω	1/10W		
R9	RCP-AJ330	FXD	CHIP	330Ω	1/10W		
R10	RCP-AJ22	FXD	CHIP	22Ω	1/10W		
R11	RCP-AJ330	FXD	CHIP	330Ω	1/10W		
U1	SIA-UPG110B-1	ISOLATION AMP (4 to 8GHz)					

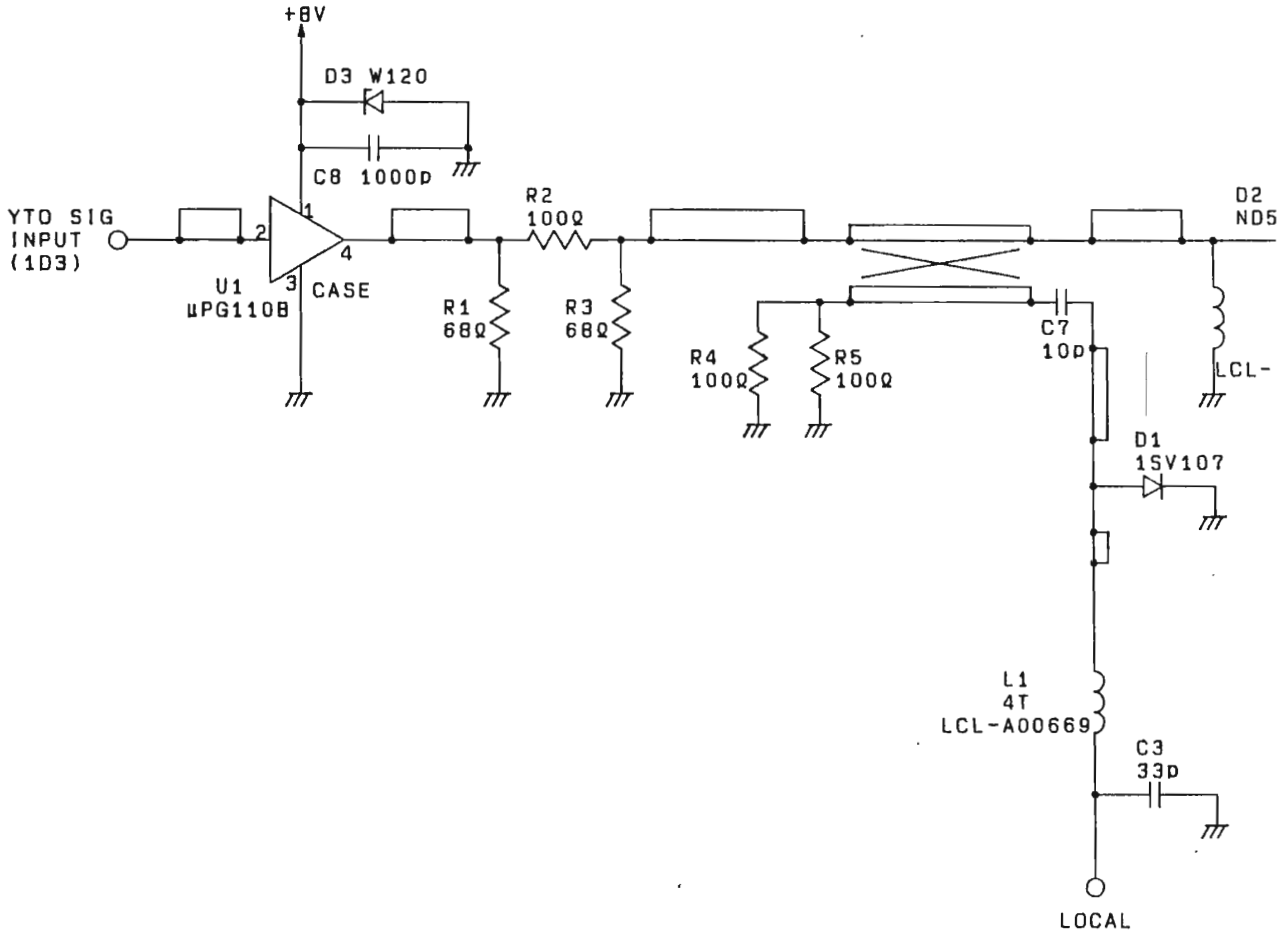
+8V
D3 W120
C8 1000p
YTO SIG
INPUT
(1D3)
U1
μPG110B
CASE
R2
100Ω
R1
68Ω
R3
68Ω
R4
100Ω
R5
100Ω
C7
10p
D2
ND5
LCL-
D1
1SV107
L1
4T
LCL-A00669
C3
33p
LOCAL

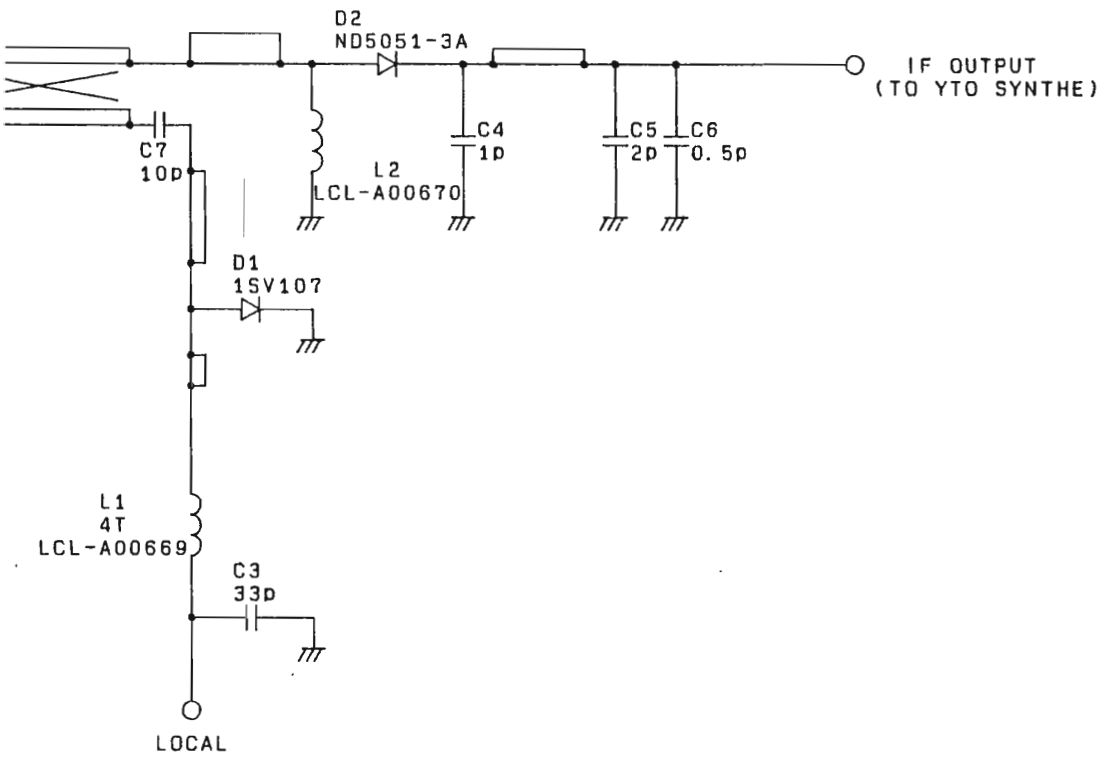

R3261/3361 SAMPLER
BTB-016118 1/2

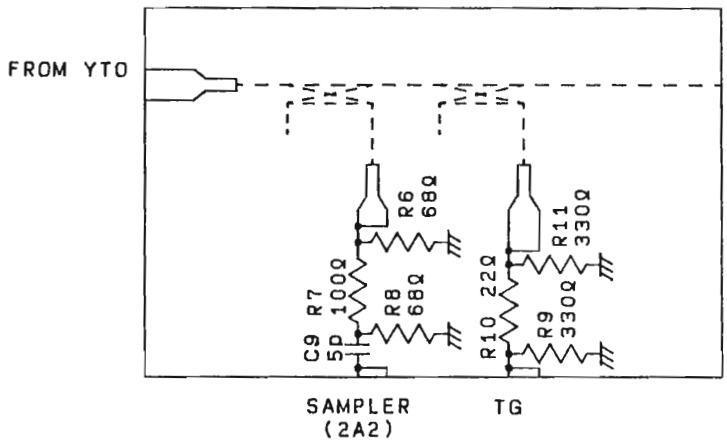

R3261/3361 SAMPLER
BTB-016118 2/2

R3261/3361
VCO CONT
BLC-015650 (1/2)

Parts No.	Advantest Stock No.	Description					Note
C1	CCP-BAR01U50V	FXD	CHIP	0.01μF	±10%	50V	
C2	CCK-BX2R2U50V	FXD	ELECT	2.2μF	±20%	50V	
C3	CCP-BAR01U50V	FXD	CHIP	0.01μF	±10%	50V	
C4	CCP-BBR1U50V	FXD	CHIP	0.1μF	+80%, -20%	50V	
C6	CFM-AH4R7U100V	FXD	FILM	4.7μF	±10%	100V	
C7	CCP-BBR1U50V	FXD	CHIP	0.1μF	+80%, -20%	50V	
C11	CCK-BX47U35V	FXD	ELECT	47μF	±20%	35V	
C12	CCK-BX100U25V	FXD	ELECT	100μF	±20%	25V	
C13	CCK-BX47U35V	FXD	ELECT	47μF	±20%	35V	
C14	CCK-BX47U35V	FXD	ELECT	47μF	±20%	35V	
CB1	DCB-QS2104X02A-1	CABLE ASSEMBLY					
D1	SDS-LS955	ULTRA-HIGH SPEED SWITCHING DIODE					
J1	JCR-AF010PX02	CONNECTOR					
J2	JCF-BA001JX02-1	CONNECTOR					
L1	LCL-C00010	COIL		180μH	±10%		
L2	LCL-C00010	COIL		180μH	±10%		
R2	RCP-AN1K	FXD	CHIP	1kΩ	±0.5%	1/10W	
R3	RCP-AN2R2K	FXD	CHIP	2.2kΩ	±0.5%	1/10W	
R4	RCP-AN1K	FXD	CHIP	1kΩ	±0.5%	1/10W	
R5	RCP-AN30K	FXD	CHIP	30kΩ	±0.5%	1/10W	
R6	RCP-AN10K	FXD	CHIP	10kΩ	±0.5%	1/10W	
R8	RCP-AN15K	FXD	CHIP	15kΩ	±0.5%	1/10W	
R9	RCP-AN11K	FXD	CHIP	11kΩ	±0.5%	1/10W	
R10	RCP-AN110	FXD	CHIP	110Ω	±0.5%	1/10W	
R11	RCP-AN1K	FXD	CHIP	1kΩ	±0.5%	1/10W	
R12	RCP-AN1R8K	FXD	CHIP	1.8kΩ	±0.5%	1/10W	
R13	RCP-AN3R9K	FXD	CHIP	3.9kΩ	±0.5%	1/10W	
R14	RCP-AN120	FXD	CHIP	120Ω	±0.5%	1/10W	
R15	RCP-AN3R9K	FXD	CHIP	3.9kΩ	±0.5%	1/10W	
R16	RCP-AN100	FXD	CHIP	100Ω	±0.5%	1/10W	
R17	RCP-AN3R9K	FXD	CHIP	3.9kΩ	±0.5%	1/10W	
R18	RCP-AN82	FXD	CHIP	82Ω	±0.5%	1/10W	
R19	RCP-AN3R9K	FXD	CHIP	3.9kΩ	±0.5%	1/10W	
R20	RCP-AN150	FXD	CHIP	150Ω	±0.5%	1/10W	
R21	RCP-AN3R9K	FXD	CHIP	3.9kΩ	±0.5%	1/10W	
R22	RCP-AN3K	FXD	CHIP	3kΩ	±0.5%	1/10W	
R23	RCP-AN1K	FXD	CHIP	1kΩ	±0.5%	1/10W	
U1	SIA-398-2	Monolithic Sample and Hold Circuit					
U2	SIA-TL072CPS	OP AMP DUAL LOW NOISE					
U4	SIA-DG201S	QUAD ANALOG SWITCHES					

R3261/3361
VCO CONT
BLC-015650 (2/2)

Parts No.	Advantest Stock No.	Description	Note
U5	SIM-74HC390S	DUAL DECADE COUNTER	

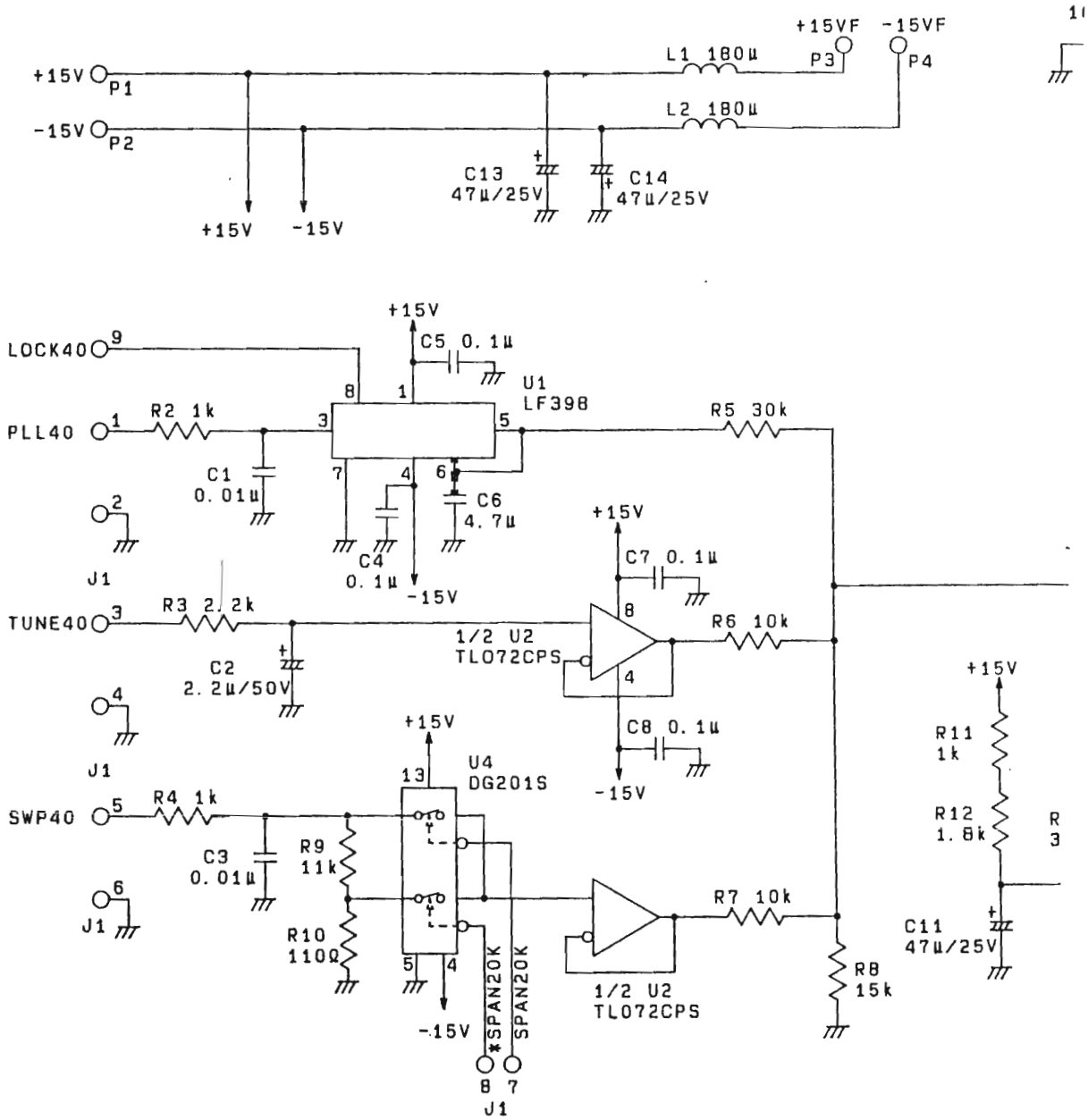
+15V
P1
-15V
P2
+15V
-15V
L1 180μ
L2 180μ
+15VF
P3
-15VF
P4
C13
47μ/25V
C14
47μ/25V
LOCK40
PLL40
R2 1k
C1
0.01μ
C5 0.1μ
U1
LF398
R5 30k
C6
4.7μ
C4
0.1μ
-15V
J1
TUNE40
R3 2.2k
C2
2.2μ/50V
1/2 U2
TL072CPS
C7 0.1μ
R6 10k
C8 0.1μ
SWP40
R4 1k
C3
0.01μ
R9
11k
R10
110Ω
U4
DG201S
SPAN20K
SPAN20K
R7 10k
1/2 U2
TL072CPS
R8
15k
R11
1k
R12
1.8k
C11
47μ/25V

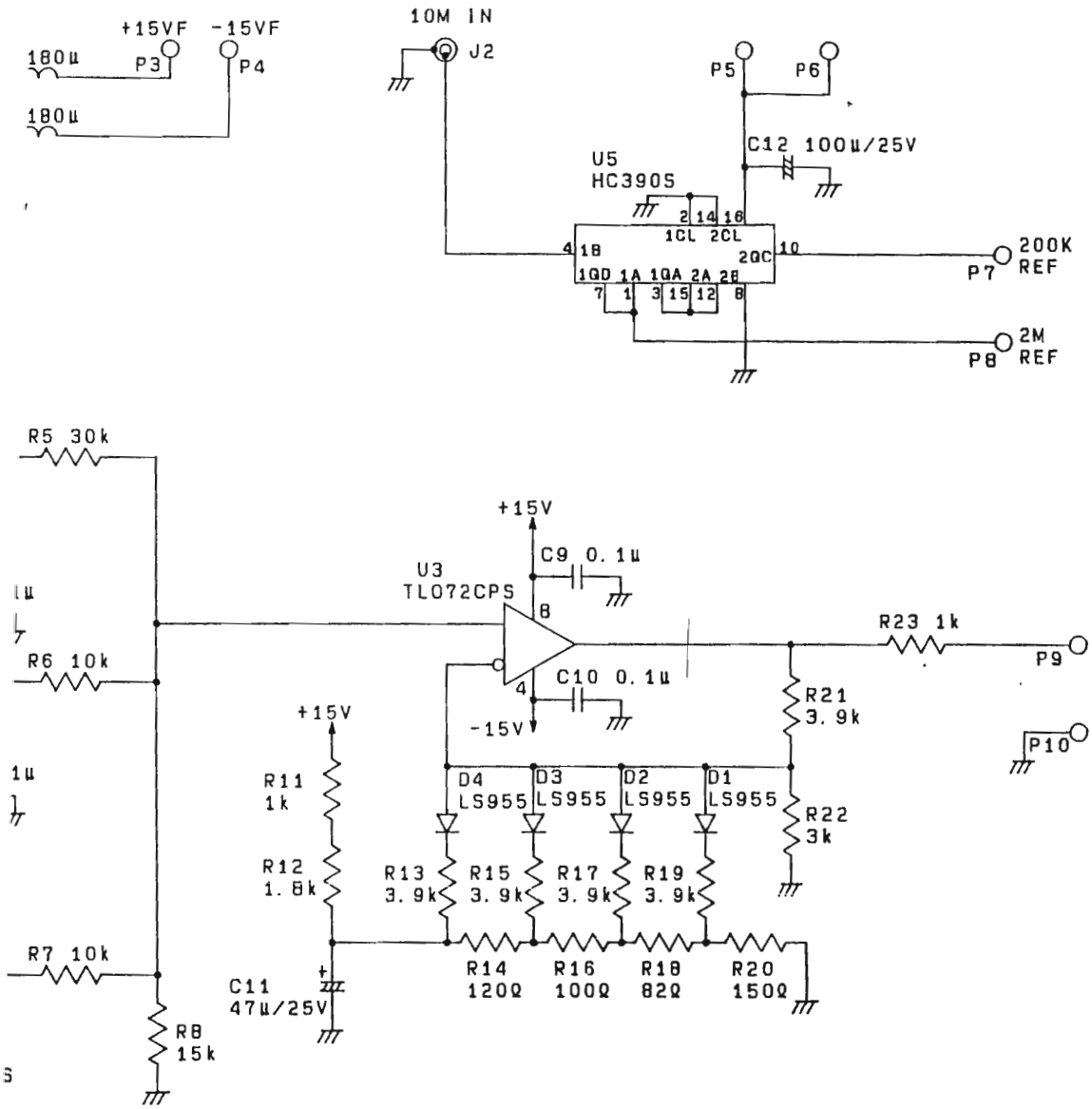

R3261/3361 VCO CONT
BLC-015650

R3261/3361
3RD CONV
BLG-015645 (1/8)

Parts No.	Advantest Stock No.	Description					Note
C1	CCP-BA1000P50V	FXD	CHIP	1000PF	±10%	50V	
C2	CCP-BAR01U50V	FXD	CHIP	0.01μF	±10%	50V	
C4	CCP-BA1P50V	FXD	CHIP	1PF	±0.25PF	50V	
C5	CCP-BA7P50V	FXD	CHIP	7PF	±0.5PF	50V	
C6	CCP-BA100P50V	FXD	CHIP	100PF	±10%	50V	
C7	CCP-BAR01U50V	FXD	CHIP	0.01μF	±10%	50V	
C12	CCP-BAR01U50V	FXD	CHIP	0.01μF	±10%	50V	
C14	CCP-BAR01U50V	FXD	CHIP	0.01μF	±10%	50V	
C15	CCP-BA10P50V	FXD	CHIP	10PF	±0.5PF	50V	
C16	CCP-BAR01U50V	FXD	CHIP	0.01μF	±10%	50V	
C19	CCP-BA2200P50V	FXD	CHIP	2200PF	±20%	50V	
C20	CCK-BY22U25V	FXD	ELECT	22μF	±20%	25V	
C21	CCP-BAR01U50V	FXD	CHIP	0.01μF	±10%	50V	
C22	CTM-BM6P	VAR		6PF	+50%, -0%	100V	
C23	CCP-AT5PR1K	FXD	CHIP	5PF	±0.5PF	100V	
C24	CCP-AV220PR1K	FXD	CHIP	220PF	±1%	100V	
C25	CCP-BBR1U50V	FXD	CHIP	0.1μF	+80%, -20%	50V	
C26	CCP-AV120PR1K	FXD	CHIP	120PF	±2%	100V	
C27	CCP-AT33PR1K	FXD	CHIP	33PF	±5%	100V	
C28	CCP-BA1000P50V	FXD	CHIP	1000PF	±10%	50V	
C29	CCP-BA1000P50V	FXD	CHIP	1000PF	±10%	50V	
C30	CCP-BAR01U50V	FXD	CHIP	0.01μF	±10%	50V	
C31	CCP-BA1000P50V	FXD	CHIP	1000PF	±10%	50V	
C32	CCP-BA1000P50V	FXD	CHIP	1000PF	±10%	50V	
C34	CCP-BAR01U50V	FXD	CHIP	0.01μF	±10%	50V	
C35	CCP-AT15PR1K	FXD	CHIP	15PF	±10%	100V	
C37	CCP-BA1000P50V	FXD	CHIP	1000PF	±10%	50V	
C38	CCP-AT10PR1K	FXD	CHIP	10PF	±0.5PF	100V	
C39	CCP-BA1000P50V	FXD	CHIP	1000PF	±10%	50V	
C40	CCP-BAR01U50V	FXD	CHIP	0.01μF	±10%	50V	
C41	CCP-AT15PR1K	FXD	CHIP	15PF	±10%	100V	
C43	CCP-BA1000P50V	FXD	CHIP	1000PF	±10%	50V	
C49	CCP-BA1000P50V	FXD	CHIP	1000PF	±10%	50V	
C53	CCP-BA10P50V	FXD	CHIP	10PF	±0.5PF	50V	
C54	CCP-BA1000P50V	FXD	CHIP	1000PF	±10%	50V	
C55	CCP-AT15PR1K	FXD	CHIP	15PF	±10%	100V	
C57	CCP-BAR01U50V	FXD	CHIP	0.01μF	±10%	50V	
C59	CCP-BA33P50V	FXD	CHIP	33PF	±5%	50V	
C60	CCP-BA5P50V	FXD	CHIP	5PF	±0.5PF	50V	
C61	CCP-BA2P50V	FXD	CHIP	2PF	±0.25PF	50V	

R3261/3361
3RD CONV
BLG-015645 (2/8)

Parts No.	Advantest Stock No.	Description					Note
C62	CCP-BA33P50V	FXD	CHIP	33PF	±5%	50V	
C63	CCP-BA10P50V	FXD	CHIP	10PF	±0.5PF	50V	
C64	CCP-BA3P50V	FXD	CHIP	3PF	±0.25PF	50V	
C65	CTM-BM10P	VAR		10PF	+50%, -0%	100V	
C66	CCP-BA33P50V	FXD	CHIP	33PF	±5%	50V	
C67	CCP-BA10P50V	FXD	CHIP	10PF	±0.5PF	50V	
C68	CCP-BA33P50V	FXD	CHIP	33PF	±5%	50V	
C69	CCP-BA5P50V	FXD	CHIP	5PF	±0.5PF	50V	
C70	CCP-BA1000P50V	FXD	CHIP	1000PF	±10%	50V	
C71	CCP-BA2P50V	FXD	CHIP	2PF	±0.25PF	50V	
C72	CCK-BX22U25V	FXD	ELECT	22μF	±20%	25V	
C74	CCK-BX22U25V	FXD	ELECT	22μF	±20%	25V	
C75	CCP-BAR01U50V	FXD	CHIP	0.01μF	±10%	50V	
C76	CCP-BAR01U50V	FXD	CHIP	0.01μF	±10%	50V	
C77	CCP-BAR01U50V	FXD	CHIP	0.01μF	±10%	50V	
C78	CCP-BAR01U50V	FXD	CHIP	0.01μF	±10%	50V	
C80	CCP-BAR01U50V	FXD	CHIP	0.01μF	±10%	50V	
C83	CCP-BA1000P50V	FXD	CHIP	1000PF	±10%	50V	
C84	CCP-BAR01U50V	FXD	CHIP	0.01μF	±10%	50V	
C85	CCP-BA1000P50V	FXD	CHIP	1000PF	±10%	50V	
C86	CCP-BAR01U50V	FXD	CHIP	0.01μF	±10%	50V	
C90	CCP-BAR01U50V	FXD	CHIP	0.01μF	±10%	50V	
C92	CCP-BAR01U50V	FXD	CHIP	0.01μF	±10%	50V	
C93	CCP-BAR01U50V	FXD	CHIP	0.01μF	±10%	50V	
C94	CCP-BA1000P50V	FXD	CHIP	1000PF	±10%	50V	
C95	CCP-BA100P50V	FXD	CHIP	100PF	±10%	50V	
C96	CCP-BAR01U50V	FXD	CHIP	0.01μF	±10%	50V	
C100	CCK-BX10U25V	FXD	ELECT	10μF	±20%	25V	
C101	CCP-BAR01U50V	FXD	CHIP	0.01μF	±10%	50V	
C102	CCP-BA100P50V	FXD	CHIP	100PF	±10%	50V	
C104	CCP-BAR01U50V	FXD	CHIP	0.01μF	±10%	50V	
C105	CCP-BAR01U50V	FXD	CHIP	0.01μF	±10%	50V	
C106	CCP-BA100P50V	FXD	CHIP	100PF	±10%	50V	
C107	CCP-BAR01U50V	FXD	CHIP	0.01μF	±10%	50V	
C114	CSM-AH2R2U50V	FXD	CER	2.2μF	+80%, -20%	50V	
C115	CCP-BAR01U50V	FXD	CHIP	0.01μF	±10%	50V	
C117	CCK-BX22U25V	FXD	ELECT	22μF	±20%	25V	
C119	CCK-BY330U10V	FXD	ELECT	330μF	±20%	10V	
C120	CCP-BBR1U50V	FXD	CHIP	0.1μF	+80%, -20%	50V	
C122	CCP-BA1000P50V	FXD	CHIP	1000PF	±10%	50V	

R3261/3361
3RD CONV
BLG-015645 (3/8)

Parts No.	Advantest Stock No.	Description					Note
C123	CCP-BA1000P50V	FXD	CHIP	1000PF	±10%	50V	
C125	CCK-BX100U25V	FXD	ELECT	100μF	±20%	25V	
C126	CCK-BX100U25V	FXD	ELECT	100μF	±20%	25V	
C127	CCK-BX100U10V	FXD	ELECT	100μF	±20%	10V	
C128	CTA-AC3R3U16V	FXD	TA	3.3μF	±20%	16V	
C129	CTA-AC3R3U16V	FXD	TA	3.3μF	±20%	16V	
C130	CCP-BBR1U50V	FXD	CHIP	0.1μF	+80%, -20%	50V	
C131	CCK-BY330U10V	FXD	ELECT	330μF	±20%	10V	
C132	CCP-BBR1U50V	FXD	CHIP	0.1μF	+80%, -20%	50V	
C135	CFM-AHR68U100V	FXD	FILM	0.68μF	±10%	100V	
C136	CFM-ASR022U50V	FXD	FILM	0.022μF	±10%	50V	
C137	CCP-BBR1U50V	FXD	CHIP	0.1μF	+80%, -20%	50V	
C138	CCP-BBR1U50V	FXD	CHIP	0.1μF	+80%, -20%	50V	
C140	CCP-BA15P50V	FXD	CHIP	15PF	±5%	50V	
C152	CCP-AW470PR1K	FXD	CHIP	470PF	±1%	100V	
C153	CCP-AV120PR1K	FXD	CHIP	120PF	±2%	100V	
D1	SDS-1SV34	SI PIN DIODE					
D2	SDS-1S2208-2	BURR CAP DIODE					
D3	SDS-LS955	ULTRA-HIGH SPEED SWITCHING DIODE					
D8	SDS-1SS97	Si SCHOTTKY DIODE UHF MIXER					
D15	SDS-LS955	ULTRA-HIGH SPEED SWITCHING DIODE					
E1	YEE-000265	SHORT CONNECTOR					
FB1	DEE-001484	FERRITE CORE					
FB3	ESM-000129	FERRITE CORE					
FB4	DEE-001484	FERRITE CORE					
FB10	ESM-000129	FERRITE CORE					
FL1	DNF-000835	D.P.F 400MHz					
J1	JCP-AA003PX05	CONNECTOR					
J4	JCF-BA001JX01	CONNECTOR					
J7	JCP-AA003PX05	CONNECTOR					
J8	JCF-BA001JX01	CONNECTOR					
J10	JCF-BA001JX01	CONNECTOR					
J11	JCF-BA001JX01	CONNECTOR					
L1	LCL-E00940	COIL	CHIP	100nH	±10%		
L2	LCL-E00338	COIL		(CUSTOM DEVICE)			
L3	LCL-E00936	COIL	CHIP	47nH	±20%		
L4	LCL-E00942	COIL	CHIP	150nH	±10%		
L6	LCL-E00960	COIL	CHIP	4.7μH	±20%		
L7	LCL-E00960	COIL	CHIP	4.7μH	±20%		
L8	LCL-C00102	COIL		(CUSTOM DEVICE)			

R3261/3361
3RD CONV
BLG-015645 (4/8)

Parts No.	Advantest Stock No.	Description					Note
L9	LCL-E00388	COIL		(CUSTOM DEVICE)			
L10	LCL-A00063	COIL		(CUSTOM DEVICE)			
L11	LCL-E00953	COIL	CHIP	1.2μH	±20%		
L13	LCL-A00065	COIL		(CUSTOM DEVICE)			
L14	LCL-A00064	COIL		(CUSTOM DEVICE)			
L16	LCL-E00389	COIL		(CUSTOM DEVICE)			
L18	LCL-E00937	COIL	CHIP	5.6nH	±20%		
L23	LCL-E00389	COIL		(CUSTOM DEVICE)			
L25	LCL-E00937	COIL	CHIP	5.6nH	±20%		
L26	LCL-A00066	COIL		(CUSTOM DEVICE)			
L27	LCL-C01049	COIL		(CUSTOM DEVICE)			
L31	LCL-A00066	COIL		(CUSTOM DEVICE)			
L32	LCL-C00010	COIL		180μH	±10%		
L35	LCL-E00389	COIL		(CUSTOM DEVICE)			
L36	LCL-C00329	COIL		(CUSTOM DEVICE)			
L40	LCL-C00010	COIL		180μH	±10%		
L42	LCL-E00948	COIL	CHIP	0.39μH	±20%		
L45	LCL-E00484	COIL		(CUSTOM DEVICE)			
L46	LCL-E00389	COIL		(CUSTOM DEVICE)			
M1	DEE-000736	DOUBLE BALANCE MIXER					
Q1	STN-2SC3356	TRANSISTOR		NPN			
Q4	STN-2SC2757	TRANSISTOR		NPN			
Q6	STP-2SA812	TRANSISTOR		PNP			
Q7	STN-2SC3356	TRANSISTOR		NPN			
Q8	STN-2SC3356	TRANSISTOR		NPN			
Q13	STN-2SC2757	TRANSISTOR		NPN			
Q21	STN-2SC1254	TRANSISTOR		NPN			
Q22	STP-2SA711	TRANSISTOR		PNP			
Q24	STN-2SC1254	TRANSISTOR		NPN			
Q25	STN-2SC1959	TRANSISTOR		NPN			
Q30	STN-2SC1254	TRANSISTOR		NPN			
Q31	STP-2SA711	TRANSISTOR		PNP			
Q33	STN-2SC1254	TRANSISTOR		NPN			
Q34	STN-2SC1959	TRANSISTOR		NPN			
R1	RCP-AJ10K	FXD	CHIP	10kΩ	±5%	1/10W	
R2	RCP-AJ3R3K	FXD	CHIP	3.3kΩ	±5%	1/10W	
R3	RCP-AJ33	FXD	CHIP	33Ω	±5%	1/10W	
R4	RCP-AH220	FXD	CHIP	220Ω	±5%	1/8W	
R5	RCP-AJ33	FXD	CHIP	33Ω	±5%	1/10W	
R6	RCP-AH330	FXD	CHIP	330Ω	±5%	1/8W	

R3261/3361
3RD CONV
BLG-015645 (5/8)

Parts No.	Advantest Stock No.	Description					Note
R7	RCP-AJ56	FXD	CHIP	56Ω	±5%	1/10W	
R17	RCP-AJ10K	FXD	CHIP	10kΩ	±5%	1/10W	
R18	RCP-AJ5R6K	FXD	CHIP	5.6kΩ	±5%	1/10W	
R19	RCP-AJ33	FXD	CHIP	33Ω	±5%	1/10W	
R20	REE-AT422S47	METAL	FLM	4200ppm/°C 47Ω		1/8W	
R21	RCP-AJ220	FXD	CHIP	220Ω	±5%	1/10W	
R22	RCP-AJ10K	FXD	CHIP	10kΩ	±5%	1/10W	
R23	RCP-AJ5R6K	FXD	CHIP	5.6kΩ	±5%	1/10W	
R24	RCP-AJ33	FXD	CHIP	33Ω	±5%	1/10W	
R25	RCP-AJ220	FXD	CHIP	220Ω	±5%	1/10W	
R26	RCP-AH680	FXD	CHIP	680Ω	±5%	1/8W	
R28	RVR-DF20	VAR		20Ω	±20%	1/2W	
R29	RCP-AJ4R7K	FXD	CHIP	4.7kΩ	±5%	1/10W	
R30	RCP-AJ3R3K	FXD	CHIP	3.3kΩ	±5%	1/10W	
R31	RCP-AJ560	FXD	CHIP	560Ω	±5%	1/10W	
R32	RCP-AJ470	FXD	CHIP	470Ω	±5%	1/10W	
R33	RCP-AJ150	FXD	CHIP	150Ω	±5%	1/10W	
R35	RCP-AJ100	FXD	CHIP	100Ω	±5%	1/10W	
R36	RCP-AJ4R7K	FXD	CHIP	4.7kΩ	±5%	1/10W	
R37	RCP-AJ4R7K	FXD	CHIP	4.7kΩ	±5%	1/10W	
R38	RCP-AJ680	FXD	CHIP	680Ω	±5%	1/10W	
R41	RCP-AJ150	FXD	CHIP	150Ω	±5%	1/10W	
R42	RCP-AJ39	FXD	CHIP	39Ω	±5%	1/10W	
R43	RCP-AJ150	FXD	CHIP	150Ω	±5%	1/10W	
R44	RCP-AJ5R6K	FXD	CHIP	5.6kΩ	±5%	1/10W	
R45	RCP-AJ3R3K	FXD	CHIP	3.3kΩ	±5%	1/10W	
R46	RCP-AH330	FXD	CHIP	330Ω	±5%	1/8W	
R47	RCP-AJ150	FXD	CHIP	150Ω	±5%	1/10W	
R48	RCP-AJ39	FXD	CHIP	39Ω	±5%	1/10W	
R49	RCP-AJ150	FXD	CHIP	150Ω	±5%	1/10W	
R50	RCP-AJ3R3K	FXD	CHIP	3.3kΩ	±5%	1/10W	
R51	RCP-AJ5R6K	FXD	CHIP	5.6kΩ	±5%	1/10W	
R52	RCP-AH330	FXD	CHIP	330Ω	±5%	1/8W	
R53	RCP-AJ150	FXD	CHIP	150Ω	±5%	1/10W	
R54	RCP-AJ39	FXD	CHIP	39Ω	±5%	1/10W	
R55	RCP-AJ150	FXD	CHIP	150Ω	±5%	1/10W	
R56	RCP-AJ470	FXD	CHIP	470Ω	±5%	1/10W	
R57	RCB-AG5R6	FXD	CAR	5.6Ω	±5%	1/6W	
R60	RCP-AJ22	FXD	CHIP	22Ω	±5%	1/10W	
R61	RCP-AJ10	FXD	CHIP	10Ω	±5%	1/10W	

R3261/3361
3RD CONV
BLG-015645 (6/8)

Parts No.	Advantest Stock No.	Description					Note
R62	RCP-AJ10	FXD	CHIP	10Ω	±5%	1/10W	
R69	RCP-AJ330	FXD	CHIP	330Ω	±5%	1/10W	
R70	RCP-AJ22	FXD	CHIP	22Ω	±5%	1/10W	
R71	RCP-AJ330	FXD	CHIP	330Ω	±5%	1/10W	
R72	RCP-AJ22	FXD	CHIP	22Ω	±5%	1/10W	
R73	RCP-AJ330	FXD	CHIP	330Ω	±5%	1/10W	
R74	RCP-AJ22	FXD	CHIP	22Ω	±5%	1/10W	
R75	RCP-AJ330	FXD	CHIP	330Ω	±5%	1/10W	
R76	RCP-AJ3R3K	FXD	CHIP	3.3kΩ	±5%	1/10W	
R77	RCP-AJ5R6K	FXD	CHIP	5.6kΩ	±5%	1/10W	
R78	RCP-AH330	FXD	CHIP	330Ω	±5%	1/8W	
R79	RCP-AJ330	FXD	CHIP	330Ω	±5%	1/10W	
R80	RCP-AJ22	FXD	CHIP	22Ω	±5%	1/10W	
R81	RCP-AJ330	FXD	CHIP	330Ω	±5%	1/10W	
R82	RCP-AH510	FXD	CHIP	510Ω	±5%	1/8W	
R83	RCP-AJ22	FXD	CHIP	22Ω	±5%	1/10W	
R85	RCP-AJ220	FXD	CHIP	220Ω	±5%	1/10W	
R86	RCP-AJ22	FXD	CHIP	22Ω	±5%	1/10W	
R87	RCP-AJ220	FXD	CHIP	220Ω	±5%	1/10W	
R89	RCP-AJ100	FXD	CHIP	100Ω	±5%	1/10W	
R90	RCP-AJ10K	FXD	CHIP	10kΩ	±5%	1/10W	
R93	RCP-AJ22	FXD	CHIP	22Ω	±5%	1/10W	
R94	RCP-AH1K	FXD	CHIP	1kΩ	±5%	1/8W	
R95	RCP-AJ68	FXD	CHIP	68Ω	±5%	1/10W	
R97	RCP-AJ22	FXD	CHIP	22Ω	±5%	1/10W	
R98	RCP-AJ330	FXD	CHIP	330Ω	±5%	1/10W	
R99	RCP-AH330	FXD	CHIP	330Ω	±5%	1/8W	
R100	RCP-AH1R2K	FXD	CHIP	1.2kΩ	±5%	1/8W	
R102	RCP-AJ1K	FXD	CHIP	1kΩ	±5%	1/10W	
R103	RCP-AJ470	FXD	CHIP	470Ω	±5%	1/10W	
R105	RCP-AJ1K	FXD	CHIP	1kΩ	±5%	1/10W	
R106	RCP-AJ680	FXD	CHIP	680Ω	±5%	1/10W	
R107	RCP-AJ22	FXD	CHIP	22Ω	±5%	1/10W	
R109	RCP-AH2R2K	FXD	CHIP	2.2kΩ	±5%	1/8W	
R110	RCP-AJ1K	FXD	CHIP	1kΩ	±5%	1/10W	
R111	RCP-AJ51	FXD	CHIP	51Ω	±5%	1/10W	
R112	RCP-AJ680	FXD	CHIP	680Ω	±5%	1/10W	
R113	RCP-AJ33	FXD	CHIP	33Ω	±5%	1/10W	
R115	RCP-AH2R2K	FXD	CHIP	2.2kΩ	±5%	1/8W	
R116	RCP-AJ150	FXD	CHIP	150Ω	±5%	1/10W	

R3261/3361
3RD CONV
BLG-015645 (7/8)

Parts No.	Advantest Stock No.	Description					Note
R117	RCP-AJ51	FXD	CHIP	51Ω	±5%	1/10W	
R118	RCP-AJ5R6K	FXD	CHIP	5.6kΩ	±5%	1/10W	
R119	RCP-AJ10K	FXD	CHIP	10kΩ	±5%	1/10W	
R120	RCP-AJ33	FXD	CHIP	33Ω	±5%	1/10W	
R121	RCP-AJ1K	FXD	CHIP	1kΩ	±5%	1/10W	
R122	RCP-AJ22	FXD	CHIP	22Ω	±5%	1/10W	
R123	RCP-AH470	FXD	CHIP	470Ω	±5%	1/8W	
R124	RCP-AN2R2K	FXD	CHIP	2.2kΩ	±0.5%	1/10W	
R126	RCP-AN1K	FXD	CHIP	1kΩ	±0.5%	1/10W	
R129	RCP-AN18K	FXD	CHIP	18kΩ	±0.5%	1/10W	
R130	RCP-AN1K	FXD	CHIP	1kΩ	±0.5%	1/10W	
R131	RCP-AN100	FXD	CHIP	100Ω	±0.5%	1/10W	
R133	RCP-AN5R6K	FXD	CHIP	5.6kΩ	±0.5%	1/10W	
R134	RCP-AJ4R7K	FXD	CHIP	4.7kΩ	±5%	1/10W	
R135	RCP-AJ4R7K	FXD	CHIP	4.7kΩ	±5%	1/10W	
R136	RCB-AG1R8K	FXD	CAR	1.8kΩ	±5%	1/6W	
R137	RCP-AJ1R2K	FXD	CHIP	1.2kΩ	±5%	1/10W	
R138	RVR-DF2K	VAR		2kΩ	±20%	1/2W	
R140	RCP-AJ1K	FXD	CHIP	1kΩ	±5%	1/10W	
R141	RCP-AJ470	FXD	CHIP	470Ω	±5%	1/10W	
R142	RCP-AJ470	FXD	CHIP	470Ω	±5%	1/10W	
R143	RCP-AJ51	FXD	CHIP	51Ω	±5%	1/10W	
R145	RCP-AN750	FXD	CHIP	750Ω	±0.5%	1/10W	
R146	RCP-AN750	FXD	CHIP	750Ω	±0.5%	1/10W	
R147	RCP-AN560	FXD	CHIP	560Ω	±0.5%	1/10W	
R148	RCP-AN1K	FXD	CHIP	1kΩ	±0.5%	1/10W	
R149	RCP-AN560	FXD	CHIP	560Ω	±0.5%	1/10W	
R150	RCP-AN1K	FXD	CHIP	1kΩ	±0.5%	1/10W	
R151	RCP-AN8R2K	FXD	CHIP	8.2kΩ	±0.5%	1/10W	
R152	RCP-AN2R7K	FXD	CHIP	2.7kΩ	±0.5%	1/10W	
R153	RCP-AJ1R8K	FXD	CHIP	1.8kΩ	±5%	1/10W	
R154	RCP-AJ1K	FXD	CHIP	1kΩ	±5%	1/10W	
R155	RVR-DF2K	VAR		2kΩ	±20%	1/2W	
R156	RCB-AG47	FXD	CAR	47Ω	±5%	1/6W	
TP1	MBM-10372A-1	TEST PIN					
TP3	MBM-10372A-1	TEST PIN					
U1	SIM-74HC04S	HEX INVERTER					
U2	SIA-1676	Bipolar Analog IC 1GHz Amp					
U3	SIC-12013	DUAL MODULUS PRESCALER					
U4	SIT-74LS74S	DUAL D-TYPE FLIP-FLOP					

R3261/3361
3RD CONV
BLG-015645 (8/8)

Parts No.	Advantest Stock No.	Description	Note
U5	SIT-74LS112S	DUAL J-K FLIP-FLOP	
U7	SIT-74LS00S	QUAD 2-INPUT NAND	
U9	SIM-74HC04S	HEX INVERTER	
U10	SIA-1675	Bipolar Analog IC 1GHz Amp	
U11	SIC-MC12009P	1/6 PRESCALER	
U16	SIT-74S112S-1	DUAL J-K FLIP-FLOP	
U17	SIT-74S00S-1	QUAD 2-INPUT NAND	
U18	SIA-OP07PS	OP AMP ULTRA-LOW OFFSET	
X1	DXD-001121-1	CRYSTAL	

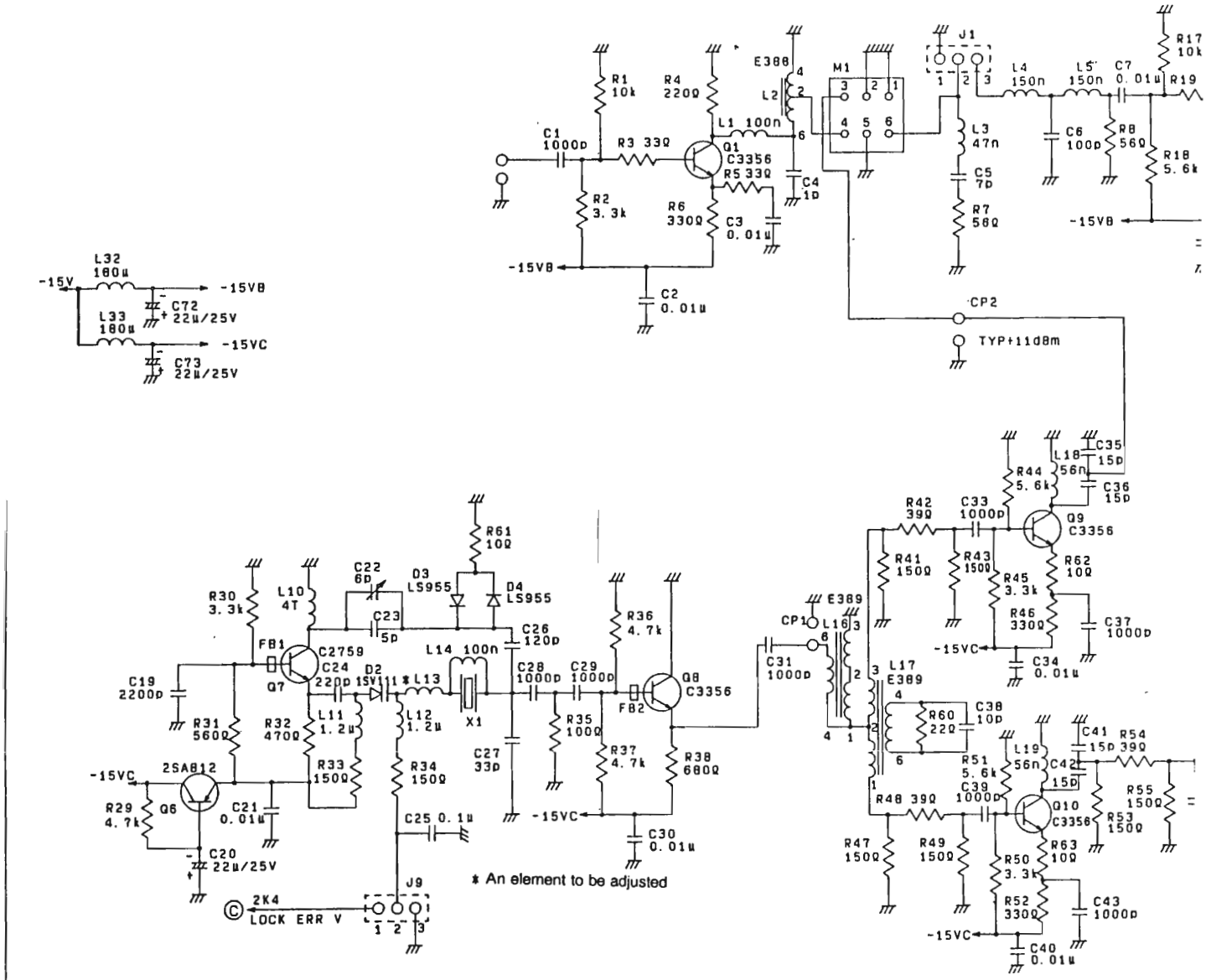
R1 10k
R4 220Ω
E388
L2
M1
J1
L4 150n
L5 150n
C7 0.01μ
R17 10k
R19
C1 1000p
R3 33Ω
L1 100n
Q1 C3356
R5 33Ω
C4 1p
L3 47n
C6 100p
R8 56Ω
R18 5.6k
R2 3.3k
R6 330Ω
C3 0.01μ
C5 7p
R7 56Ω
-15VB
C2 0.01μ
CP2
TYP+11dBm
L32 180μ
-15V
-15VB
C72 22μ/25V
L33 180μ
-15VC
C73 22μ/25V
R44 5.6k
L18 56n
C35 15p
C36 15p
R42 39Ω
C33 1000p
Q9 C3356
R41 150Ω
R43 150Ω
R45 3.3k
R62 10Ω
R46 330Ω
C37 1000p
-15VC
C34 0.01μ
R61 10Ω
C22 6p
D3 LS955
D4 LS955
R30 3.3k
L10 4T
C23 5p
C26 120p
R36 4.7k
FB1
C2759
C24 220p
D2 15V
L13
L14 100n
C28 1000p
C29 1000p
Q8 C3356
C19 2200p
Q7
FB2
R31 560Ω
R32 470Ω
L11 1.2μ
L12 1.2μ
X1
R35 100Ω
R37 4.7k
R38 680Ω
C27 33p
-15VC
2SA812
R33 150Ω
R34 150Ω
R29 4.7k
Q6
C21 0.01μ
C25 0.1μ
-15VC
C30 0.01μ
C20 22μ/25V
J9
* An element to be adjusted
2K4
LOCK ERR V
E389
CP1
L16
C31 1000p
L17 E389
R60 22Ω
C38 10p
R51 5.6k
L19 56n
C41 15p
R54 39Ω
C42 15p
C39 1000p
R55 150Ω
R48 39Ω
Q10 C3356
R53 150Ω
R47 150Ω
R49 150Ω
R50 3.3k
R63 10Ω
R52 330Ω
C43 1000p
-15VC
C40 0.01μ

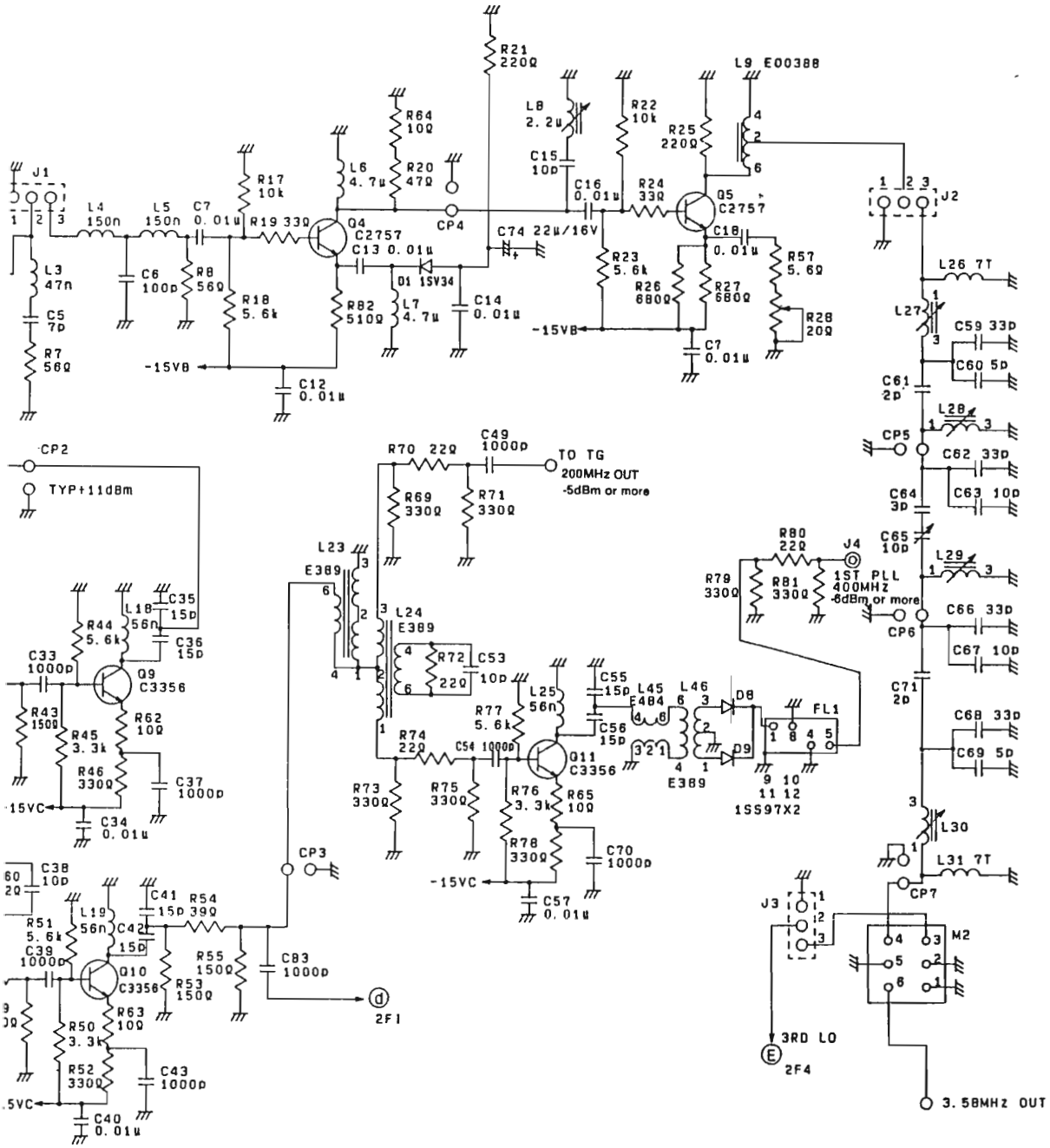

R3261/3361 3RD CONV
BLG-015645 1/3

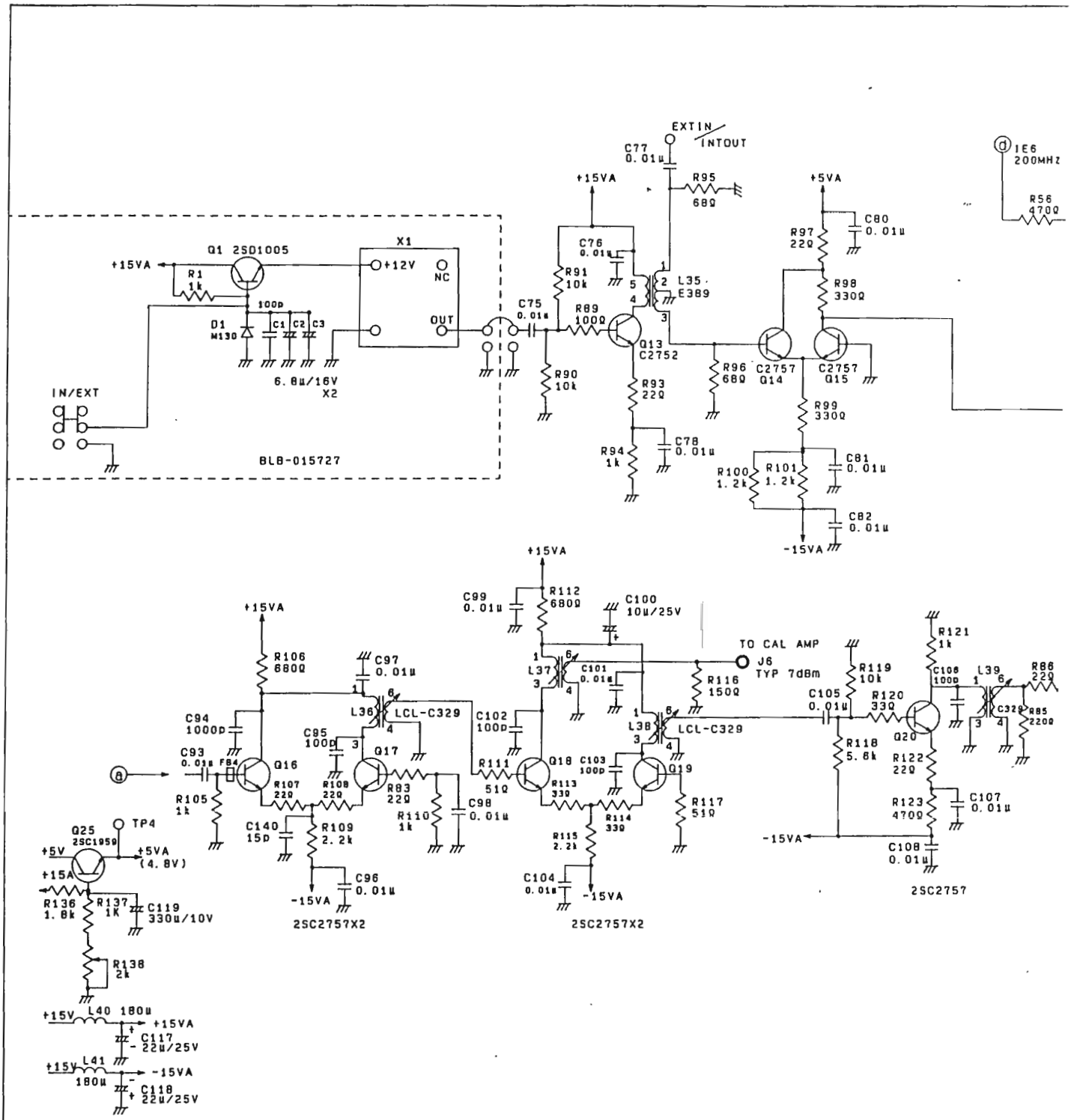
EXTIN
INTOUT
C77 0.01u
R95 68Ω
+15VA
+5VA
IE6 200MHz
R56 470Ω
C80 0.01u
R97 22Ω
R98 330Ω
C76 0.01u
R91 10k
L35 E389
Q1 2SD1005
X1
+12V
NC
OUT
R1 1k
100p
D1 M130
C1 C2 C3
6.8u/16V X2
C75 0.01u
R89 100Ω
Q13 C2752
R90 10k
R93 22Ω
R96 68Ω
C2757 Q14
C2757 Q15
R99 330Ω
IN/EXT
BLB-015727
R94 1k
C78 0.01u
R100 1.2k
R101 1.2k
C81 0.01u
C82 0.01u
-15VA
C99 0.01u
R112 680Ω
C100 10u/25V
TO CAL AMP
J6 TYP 7dBm
R106 680Ω
C97 0.01u
L37
C101 0.01u
R116 150Ω
R119 10k
R121 1k
C106 100p
L39
R86 22Ω
C94 1000p
L36 LCL-C329
C102 100p
L38 LCL-C329
C105 0.01u
R120 33Ω
C329
R85 220Ω
C95 100p
C93 0.01u
FB4
Q16
Q17
Q18
Q19
Q20
R118 5.6k
R122 22Ω
R105 1k
R107 22Ω
R108 22Ω
R83 22Ω
R111 51Ω
R113 33Ω
C103 100p
R117 51Ω
R110 1k
C98 0.01u
R114 33Ω
R123 470Ω
C107 0.01u
C140 15p
R109 2.2k
R115 2.2k
C108 0.01u
TP4
Q25 2SC1959
+5V
+5VA (4.8V)
+15A
C96 0.01u
C104 0.01u
2SC2757X2
2SC2757X2
2SC2757
R136 1.8k
R137 1k
C119 330u/10V
R138 2k
+15V
L40 180u
C117 22u/25V
L41 180u
C118 22u/25V

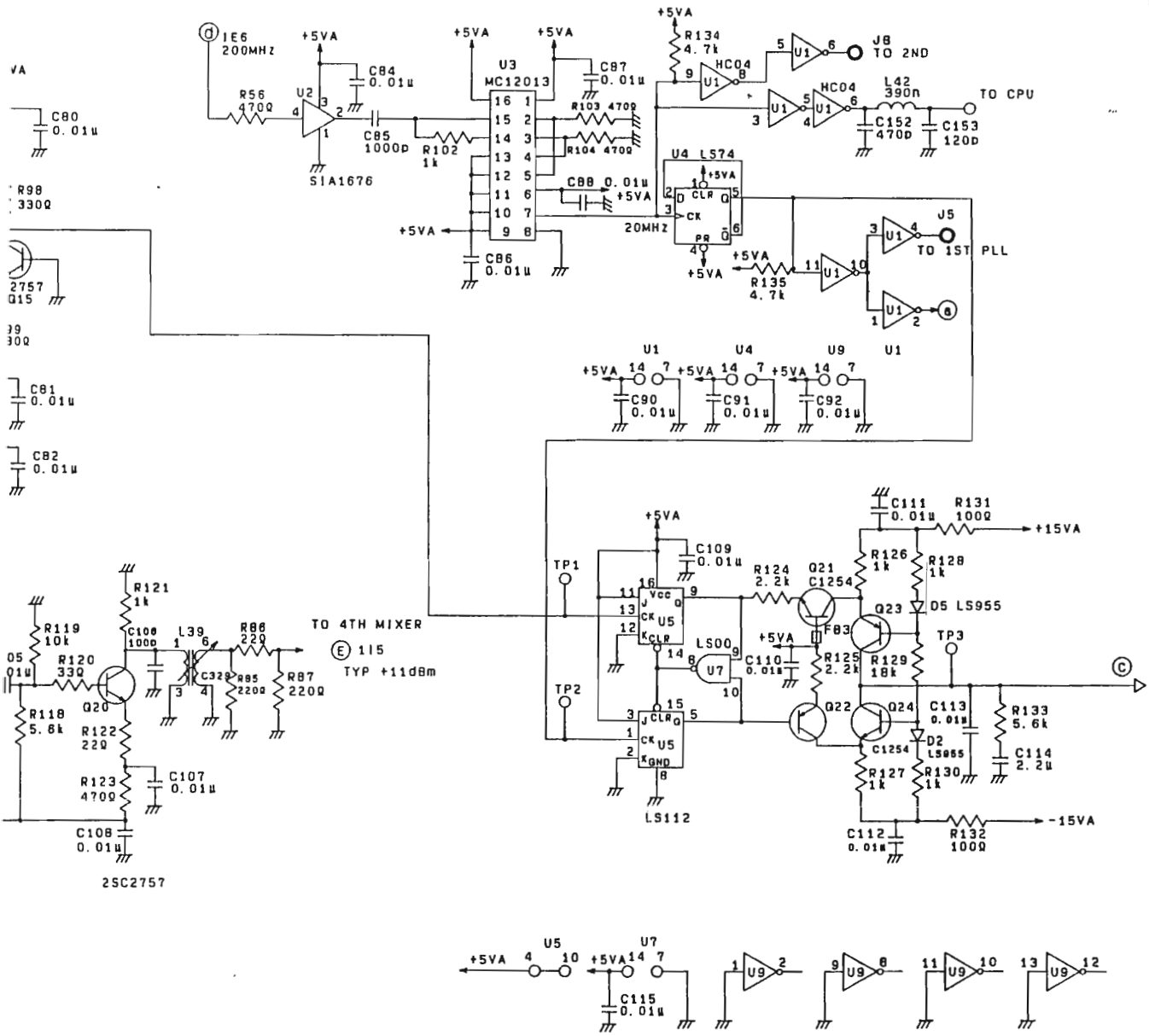

R3261/3361 3RD CONV
BLG-015645 2/3

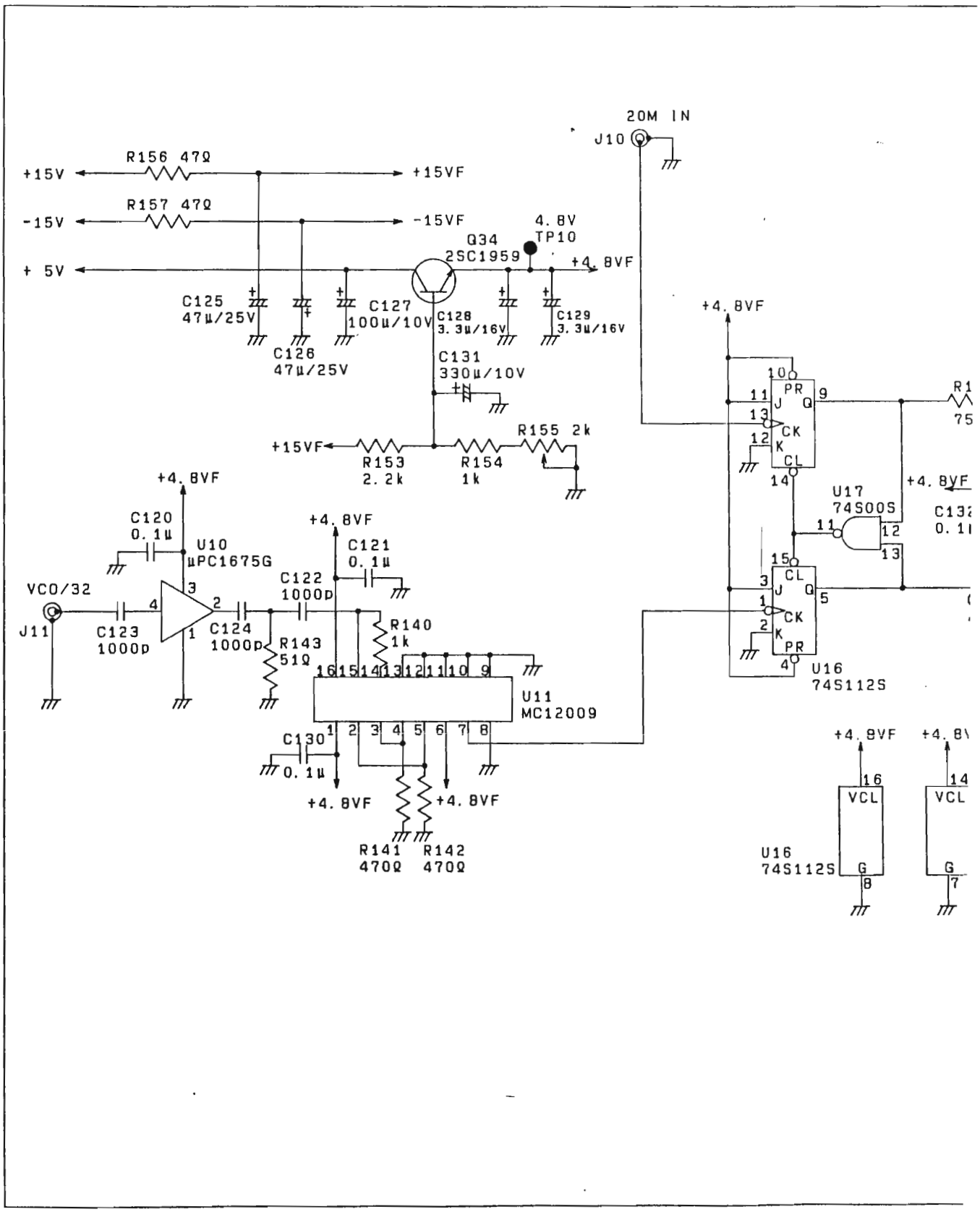
20M IN
J10
+15V
R156 47Ω
+15VF
-15V
R157 47Ω
-15VF
4.8V
TP10
Q34
2SC1959
+ 5V
+4.8VF
C125
47μ/25V
C126
47μ/25V
C127
100μ/10V
C128
3.3μ/16V
C129
3.3μ/16V
C131
330μ/10V
+15VF
R153
2.2k
R154
1k
R155 2k
+4.8VF
C120
0.1μ
U10
μPC1675G
VCO/32
J11
C123
1000p
C124
1000p
C122
1000p
C121
0.1μ
R143
51Ω
R140
1k
U11
MC12009
C130
0.1μ
R141
470Ω
R142
470Ω
U17
74S00S
U16
74S112S
PR
CK
CL
VCL
G

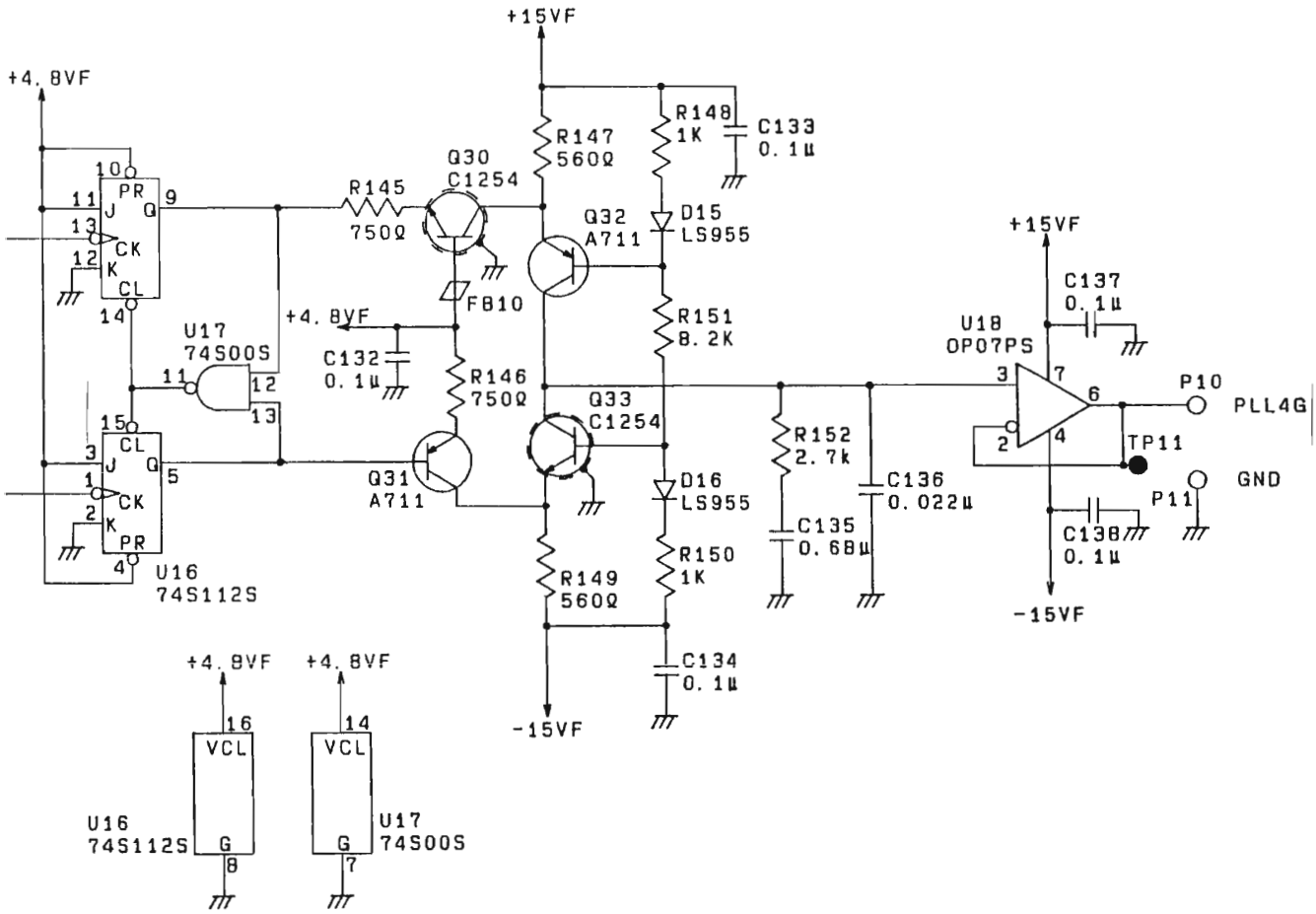

R3261/3361 3RD CONV
BLG-015645 3/3

R3261/3361
YTO SYNTHE
BLK-015649 (1/8)

Parts No.	Advantest Stock No.	Description					Note
C1	CCP-BA100P50V	FXD	CHIP	100PF	±10%	50V	
C2	CCP-BBR1U50V	FXD	CHIP	0.1μF	+80%, -20%	50V	
C3	CCP-BA1000P50V	FXD	CHIP	1000PF	±10%	50V	
C4	CCP-AT7PR1K	FXD	CHIP	7PF	±0.5PF	100V	
C5	CCP-AT10PR1K	FXD	CHIP	10PF	±1PF	100V	
C7	CCP-BAR01U50V	FXD	CHIP	0.01μF	±10%	50V	
C9	CTM-BM30P	VAR		30PF	+50%, -0%	100V	
C10	CTM-BM10P	VAR		10PF	+50%, -0%	100V	
C11	CCP-BBR1U50V	FXD	CHIP	0.1μF	+80%, -20%	50V	
C14	CCP-BA33P50V	FXD	CHIP	33PF	±5%	50V	
C15	CCP-BBR1U50V	FXD	CHIP	0.1μF	+80%, -20%	50V	
C16	CCP-BA68P50V	FXD	CHIP	68PF	±5%	50V	
C17	CCP-AV47PR1K	FXD	CHIP	47PF	±2%	100V	
C18	CCP-AV51PR1K	FXD	CHIP	51PF	±2%	100V	
C19	CCP-AV47PR1K	FXD	CHIP	47PF	±2%	100V	
C20	CCP-BAR01U50V	FXD	CHIP	0.01μF	±10%	50V	
C21	CCP-BBR1U50V	FXD	CHIP	0.1μF	+80%, -20%	50V	
C22	CCP-BAR01U50V	FXD	CHIP	0.01μF	±10%	50V	
C23	CCP-BBR1U50V	FXD	CHIP	0.1μF	+80%, -20%	50V	
C24	CCP-BAR01U50V	FXD	CHIP	0.01μF	±10%	50V	
C25	CCP-BA470P50V	FXD	CHIP	470PF	±5%	50V	
C26	CCP-BBR1U50V	FXD	CHIP	0.1μF	+80%, -20%	50V	
C29	CFM-AS4700P50V	FXD	FILM	4700PF	±10%	50V	
C30	CCP-BA1000P50V	FXD	CHIP	1000PF	±10%	50V	
C31	CCP-AT11PR1K	FXD	CHIP	11PF	±10%	100V	
C33	CCP-AT3PR1K	FXD	CHIP	3PF	±0.5PF	100V	
C34	CCP-AT5PR1K	FXD	CHIP	5PF	±0.5PF	100V	
C35	CCP-AT7PR1K	FXD	CHIP	7PF	±0.5PF	100V	
C36	CCP-BA33P50V	FXD	CHIP	33PF	±5%	50V	
C37	CCP-BA5P50V	FXD	CHIP	5PF	±0.5PF	50V	
C38	CCP-BA1000P50V	FXD	CHIP	1000PF	±10%	50V	
C39	CCK-BX47U25V	FXD	ELECT	47μF	±20%	25V	
C40	CCP-BBR1U50V	FXD	CHIP	0.1μF	+80%, -20%	50V	
C41	CCP-BA1000P50V	FXD	CHIP	1000PF	±10%	50V	
C42	CCK-BX100U10V	FXD	ELECT	100μF	±20%	10V	
C43	CCK-BX100U25V	FXD	ELECT	100μF	±20%	25V	
C44	CSM-AGR01U50V	FXD	CER	0.01μF	+80%, -20%	50V	
C45	CCP-BA100P50V	FXD	CHIP	100PF	±10%	50V	
C46	CCP-BAR01U50V	FXD	CHIP	0.01μF	±10%	50V	
C48	CCP-BAR01U50V	FXD	CHIP	0.01μF	±10%	50V	

R3261/3361
YTO SYNTHE
BLK-015649 (2/8)

Parts No.	Advantest Stock No.	Description					Note
C49	CCP-BAR01U50V	FXD	CHIP	0.01μF	±10%	50V	
C50	CCP-BBR1U50V	FXD	CHIP	0.1μF	+80%, -20%	50V	
C51	CCK-BX100U10V	FXD	ELECT	100μF	±20%	10V	
C52	CTA-AC3R3U16V	FXD	TA	3.3μF	±20%	16V	
C53	CCK-BX100U10V	FXD	ELECT	100μF	±20%	10V	
C54	CCK-BX47U25V	FXD	ELECT	47μF	±20%	25V	
C55	CCK-BX47U25V	FXD	ELECT	47μF	±20%	25V	
C56	CFM-ASR01U50V	FXD	FILM	0.01μF	±10%	50V	
C57	CFM-AHR1U100V	FXD	FILM	0.1μF	±10%	100V	
C58	CCP-AV47PR1K	FXD	CHIP	47PF	±2%	100V	
C59	CCP-AV51PR1K	FXD	CHIP	51PF	±2%	100V	
C60	CCP-AV47PR1K	FXD	CHIP	47PF	±2%	100V	
C61	CCP-BAR01U50V	FXD	CHIP	0.01μF	±10%	50V	
C62	CCP-BBR1U50V	FXD	CHIP	0.1μF	+80%, -20%	50V	
C66	CTA-AA100U20V	FXD	TA	100μF	±20%	20V	
C67	CTA-AA100U20V	FXD	TA	100μF	±20%	20V	
C68	CCP-BBR1U50V	FXD	CHIP	0.1μF	+80%, -20%	50V	
C70	CFM-AH1U100V	FXD	FILM	1μF	±10%	100V	
C74	CCP-BBR1U50V	FXD	CHIP	0.1μF	+80%, -20%	50V	
C75	CCP-BAR01U50V	FXD	CHIP	0.01μF	±10%	50V	
C76	CCP-BBR1U50V	FXD	CHIP	0.1μF	+80%, -20%	50V	
C77	CCP-BBR1U50V	FXD	CHIP	0.1μF	+80%, -20%	50V	
C78	CCP-BA3P50V	FXD	CHIP	3PF	±0.25PF	50V	
C79	CCP-BA3P50V	FXD	CHIP	3PF	±0.25PF	50V	
C80	CCP-AT18PR1K	FXD	CHIP	18PF	±10%	100V	
C81	CCP-BA15P50V	FXD	CHIP	15PF	±5%	50V	
C82	CCP-BA1P50V	FXD	CHIP	1PF	±0.25PF	50V	
C83	CCP-BA15P50V	FXD	CHIP	15PF	±5%	50V	
C85	CFM-AS1000P50V	FXD	FILM	1000PF	±10%	50V	
C86	CFM-ANR1U50V	FXD	FILM	0.1μF	±5%	50V	
C87	CCP-BA10P50V	FXD	CHIP	10PF	±0.5%	50V	
C88	CCP-BA470P50V	FXD	CHIP	470PF	±5%	50V	
C89	CCP-BA1000P50V	FXD	CHIP	1000PF	±10%	50V	
C90	CCP-BA100P50V	FXD	CHIP	100PF	±10%	50V	
C91	CCP-AT7PR1K	FXD	CHIP	7PF	±0.5PF	100V	
C92	CCP-AT10PR1K	FXD	CHIP	10PF	±1PF	100V	
C93	CCP-AT2R5PR1K	FXD	CHIP	2.5PF	±0.25PF	100V	
C94	CCP-AT10PR1K	FXD	CHIP	10PF	±1PF	100V	
C95	CCP-AT7PR1K	FXD	CHIP	7PF	±0.5PF	100V	
C96	CCP-BA33P50V	FXD	CHIP	33PF	±5%	50V	

R3261/3361
YTO SYNTHE
BLK-015649 (3/8)

Parts No.	Advantest Stock No.	Description					Note
C97	CCP-BA5P50V	FXD	CHIP	5PF	±0.5PF	50V	
C98	CCP-BA1000P50V	FXD	CHIP	1000PF	±10%	50V	
C99	CCK-BX47U25V	FXD	ELECT	47μF	±20%	25V	
C100	CCP-BBR1U50V	FXD	CHIP	0.1μF	+80%, -20%	50V	
C101	CCP-BA1000P50V	FXD	CHIP	1000PF	±10%	50V	
C102	CCP-BBR1U50V	FXD	CHIP	0.1μF	+80%, -20%	50V	
C104	CCP-BBR1U50V	FXD	CHIP	0.1μF	+80%, -20%	50V	
C105	CCK-BX100U10V	FXD	ELECT	100μF	±20%	10V	
C106	CCK-BX100U10V	FXD	ELECT	100μF	±20%	10V	
C107	CCK-BX100U10V	FXD	ELECT	100μF	±20%	10V	
C108	CCK-BX100U10V	FXD	ELECT	100μF	±20%	10V	
C109	CCK-BX47U25V	FXD	ELECT	47μF	±20%	25V	
C110	CCK-BX47U25V	FXD	ELECT	47μF	±20%	25V	
C111	CCP-BA1000P50V	FXD	CHIP	1000PF	±10%	50V	
C112	CCP-BA1000P50V	FXD	CHIP	1000PF	±10%	50V	
C113	CCP-BA1000P50V	FXD	CHIP	1000PF	±10%	50V	
C114	CCP-BAR01U50V	FXD	CHIP	0.01μF	±10%	50V	
C115	CCP-BBR1U50V	FXD	CHIP	0.1μF	+80%, -20%	50V	
C116	CCP-BA1000P50V	FXD	CHIP	1000PF	±10%	50V	
C118	CCK-BX100U10V	FXD	ELECT	100μF	±20%	10V	
C119	CCP-BA100P50V	FXD	CHIP	100PF	±10%	50V	
C120	CCK-BX47U25V	FXD	ELECT	47μF	±20%	25V	
C121	CCK-BX47U25V	FXD	ELECT	47μF	±20%	25V	
C122	CCK-BX330U10V	FXD	ELECT	330μF	±20%	10V	
C123	CTA-AC3R3U16V	FXD	TA	3.3μF	±20%	16V	
C124	CCP-BA1000P50V	FXD	CHIP	1000PF	±10%	50V	
C125	CCP-BA1000P50V	FXD	CHIP	1000PF	±10%	50V	
C126	CCP-BA27P50V	FXD	CHIP	27PF	±5%	50V	
C127	CCP-BBR1U50V	FXD	CHIP	0.1μF	+80%, -20%	50V	
C128	CCP-BA100P50V	FXD	CHIP	100PF	±10%	50V	
C129	CCP-BA10P50V	FXD	CHIP	10PF	±0.5%	50V	
C130	CCP-BA18P50V	FXD	CHIP	18PF	±10%	50V	
C131	CSM-BA220P50V	FXD	CER	220PF	±5%	50V	
C132	CCP-BA100P50V	FXD	CHIP	100PF	±10%	50V	
C133	CCP-BA4P50V	FXD	CHIP	4PF	±0.5PF	50V	
C134	CCP-BA100P50V	FXD	CHIP	100PF	±10%	50V	
C135	CCP-BA100P50V	FXD	CHIP	100PF	±10%	50V	
C136	CTM-BM20P	VAR		20PF	+50%, -0%	100V	
C137	CCP-BA2P50V	FXD	CHIP	2PF	±0.25PF	50V	
C138	CCP-BAR01U50V	FXD	CHIP	0.01μF	±10%	50V	

R3261/3361
YTO SYNTHE
BLK-015649 (4/8)

Parts No.	Advantest Stock No.	Description					Note
C139	CCP-TCR1U50V	FXD	CHIP	0.1μF	+80%, -20%	50V	
C140	CSM-AGR01U50V	FXD	CER	0.01μF	+80%, -20%	50V	
C141	CCP-BA150P50V	FXD	CER	150PF	±5%	50V	
C142	CCP-BA10P50V	FXD	CER	10PF	±0.5PF	50V	
C143	CCP-BA10P50V	FXD	CER	10PF	±0.5PF	50V	
C144	CCK-BY100U25V	FXD	ELECT	100μF	±20%	25V	
C145	CTA-AE2R2U20V	FXD	TA	2.2μF	±20%	20V	
C150	CCP-BA100P50V	FXD	CHIP	100PF	±10%	50V	
D2	SDZ-M051	ZENER DIODE					
D3	SDS-LS955	ULTRA-HIGH SPEED SWITCHING DIODE					
D5	SDS-LD1	Si SWITCHING DIODE					
D6	SDS-1S2208	BURR CAP DIODE MIXER					
D7	SDS-1SS242	Si SCHOTTKY BARRIER DIODE UHF					
D10	SDS-LS955	ULTRA-HIGH SPEED SWITCHING DIODE					
D20	SDS-LS955	ULTRA-HIGH SPEED SWITCHING DIODE					
D21	SDS-1S2208	BURR CAP DIODE MIXER					
D22	SDS-1SS242	Si SCHOTTKY BARRIER DIODE UHF					
D24	SDS-LS955	ULTRA-HIGH SPEED SWITCHING DIODE					
DR1	DEE-001877-1	DR	400MHz				
DR2	DEE-001878-1	DR	350MHz				
FB1	ESM-000129	FERRITE CURE					
FB3	ESM-000129	FERRITE CURE					
J1	JCR-AF010PX02	CONNECTOR					
J2	JCF-BA001JX01-1	CONNECTOR					
J3	JCS-BZ003PX01	CONNECTOR					
J4	JCF-BA001JX01	CONNECTOR					
L1	LCL-E01296-1	COIL	CHIP	56nH	±5%		
L2	LCL-A00062	COIL		(CUSTOM DEVICE)			
L3	LCL-E00952	COIL	CHIP	1μH	±20%		
L4	LCL-E00947	COIL	CHIP	0.27μH	±20%		
L5	LCL-E00948	COIL	CHIP	0.39μH	±20%		
L7	LCL-E00947	COIL	CHIP	0.27μH	±20%		
L8	LCL-E00948	COIL	CHIP	0.39μH	±20%		
L9	LCL-B00354	COIL		2200μH	±10%		
L10	LCL-E00952	COIL	CHIP	1μH	±20%		
L11	LCL-E00952	COIL	CHIP	1μH	±20%		
L12	LCL-E00947	COIL	CHIP	0.27μH	±20%		
L13	LCL-E00948	COIL	CHIP	0.39μH	±20%		
L14	LCL-E00948	COIL	CHIP	0.39μH	±20%		
L15	LCL-E00947	COIL	CHIP	0.27μH	±20%		

R3261/3361
YTO SYNTHE
BLK-015649 (5/8)

Parts No.	Advantest Stock No.	Description					Note
L16	LCL-E00933	COIL	CHIP	22nH	±20%		
L17	LCL-E00933	COIL	CHIP	22nH	±20%		
L18	LCL-E00952	COIL	CHIP	1.0μH	±20%		
L20	LCL-E00952	COIL	CHIP	1.0μH	±20%		
L21	LCL-E00943	COIL	CHIP	180nH	±10%		
L22	LCL-C00010	COIL		180μH	±10%		
L23	LCL-C00010	COIL		180μH	±10%		
L25	LCL-C00010	COIL		180μH	±10%		
L28	LCL-E01078	COIL	CHIP	33nH	±20%		
L29	LCL-E01072	COIL	CHIP	10nH	±20%		
L30	LCL-E01092	COIL	CHIP	0.1μH	±5%		
L31	LCL-E01072	COIL	CHIP	10nH	±20%		
L32	LCL-E01095	COIL	CHIP	0.18μH	±5%		
L33	LCL-E01081	COIL	CHIP	0.27μH	±20%		
L34	LCL-E01077	COIL	CHIP	27nH	±20%		
MX1	DEE-000736	DOUBLE BALANCE MIXER					
Q1	STN-2SC3356	TRANSISTOR		NPN			
Q2	STN-2SC1426	TRANSISTOR		NPN			
Q3	SFM-3SK129	MES FET GzAs N Channel					
Q4	STP-2SA1462	TRANSISTOR		PNP			
Q5	STN-2SC3356	TRANSISTOR		NPN			
Q6	STP-2SA812	TRANSISTOR		PNP			
Q7	STN-2SC2712	TRANSISTOR		NPN			
Q8	STN-2SC2712	TRANSISTOR		NPN			
Q10	STN-2SC1254	TRANSISTOR		NPN			
Q11	STP-2SA711	TRANSISTOR		PNP			
Q13	STN-2SC1254	TRANSISTOR		NPN			
Q14	STN-2SC2712	TRANSISTOR		NPN			
Q15	STN-2SC1254	TRANSISTOR		NPN			
Q16	STP-2SA711	TRANSISTOR		PNP			
Q18	STN-2SC1254	TRANSISTOR		NPN			
Q20	STN-2SC3356	TRANSISTOR		NPN			
Q21	STP-2SA812	TRANSISTOR		PNP			
Q22	STN-2SC2712	TRANSISTOR		NPN			
Q23	STN-2SC1959	TRANSISTOR		NPN			
R1	RCP-AN100	FXD	CHIP	100Ω	±0.5%	1/10W	
R2	RCP-AN5R1K	FXD	CHIP	5.1kΩ	±0.5%	1/10W	
R3	RCP-AN10K	FXD	CHIP	10kΩ	±0.5%	1/10W	
R4	RCP-AJ8R2	FXD	CHIP	8.2Ω	±10%	1/10W	
R5	RCP-AN270	FXD	CHIP	270Ω	±0.5%	1/10W	

R3261/3361
YTO SYNTHE
BLK-015649 (6/8)

Parts No.	Advantest Stock No.	Description					Note
R6	RCP-AH180	FXD	CHIP	180Ω	±5%	1/8W	
R7	RCP-AN100	FXD	CHIP	100Ω	±0.5%	1/10W	
R8	RCP-AN22	FXD	CHIP	22Ω	±0.5%	1/10W	
R9	RCP-AH270	FXD	CHIP	270Ω	±5%	1/8W	
R10	RCP-AH270	FXD	CHIP	270Ω	±5%	1/8W	
R11	RCP-AH270	FXD	CHIP	270Ω	±5%	1/8W	
R12	RVR-DF10K	VAR		10kΩ	±20%	1/2W	
R13	RCP-AN1K	FXD	CHIP	1kΩ	±0.5%	1/10W	
R14	RCP-AN10K	FXD	CHIP	10kΩ	±0.5%	1/10W	
R15	RCP-AN8R2K	FXD	CHIP	8.2kΩ	±0.5%	1/10W	
R16	RCP-AN3R3K	FXD	CHIP	3.3kΩ	±0.5%	1/10W	
R17	RCP-AN5R6K	FXD	CHIP	5.6kΩ	±0.5%	1/10W	
R18	RCP-AN820	FXD	CHIP	820Ω	±0.5%	1/10W	
R19	RCP-AN560	FXD	CHIP	560Ω	±0.5%	1/10W	
R20	RCP-AN56	FXD	CHIP	56Ω	±0.5%	1/10W	
R21	RCP-AN33	FXD	CHIP	33Ω	±0.5%	1/10W	
R22	RCP-AN560	FXD	CHIP	560Ω	±0.5%	1/10W	
R23	RCP-AN1R8K	FXD	CHIP	1.8kΩ	±0.5%	1/10W	
R24	RCP-AN22	FXD	CHIP	22Ω	±0.5%	1/10W	
R26	RCP-AN270	FXD	CHIP	270Ω	±0.5%	1/10W	
R27	RCP-AN18	FXD	CHIP	18Ω	±0.5%	1/10W	
R28	RCP-AN270	FXD	CHIP	270Ω	±0.5%	1/10W	
R29	RCP-AN15K	FXD	CHIP	15kΩ	±0.5%	1/10W	
R30	RCP-AN10K	FXD	CHIP	10kΩ	±0.5%	1/10W	
R31	RCP-AN6R8K	FXD	CHIP	6.8kΩ	±0.5%	1/10W	
R32	RCP-AN150	FXD	CHIP	150Ω	±0.5%	1/10W	
R33	RCP-AN39	FXD	CHIP	39Ω	±0.5%	1/10W	
R34	RCP-AN150	FXD	CHIP	150Ω	±0.5%	1/10W	
R35	RCP-AN150	FXD	CHIP	150Ω	±0.5%	1/10W	
R36	RCP-AN10K	FXD	CHIP	10kΩ	±0.5%	1/10W	
R37	RCP-AN4R7K	FXD	CHIP	4.7kΩ	±0.5%	1/10W	
R38	RCP-AN56	FXD	CHIP	56Ω	±0.5%	1/10W	
R39	RCP-AN390	FXD	CHIP	390Ω	±0.5%	1/10W	
R40	RCP-AN3R3K	FXD	CHIP	3.3kΩ	±0.5%	1/10W	
R41	RCP-AN2R2K	FXD	CHIP	2.2kΩ	±0.5%	1/10W	
R42	RCP-AN2R2K	FXD	CHIP	2.2kΩ	±0.5%	1/10W	
R43	RCP-AN1K	FXD	CHIP	1kΩ	±0.5%	1/10W	
R45	RCP-AN1K	FXD	CHIP	1kΩ	±0.5%	1/10W	
R47	RCP-AN18K	FXD	CHIP	18kΩ	±0.5%	1/10W	
R48	RCP-AN1K	FXD	CHIP	1kΩ	±0.5%	1/10W	

R3261/3361
YTO SYNTHE
BLK-015649 (7/8)

Parts No.	Advantest Stock No.	Description					Note
R49	RCP-AN51	FXD	CHIP	51Ω	±0.5%	1/10W	
R50	RCP-AN10K	FXD	CHIP	10kΩ	±0.5%	1/10W	
R51	RCP-AN750	FXD	CHIP	750Ω	±0.5%	1/10W	
R52	RCP-AN750	FXD	CHIP	750Ω	±0.5%	1/10W	
R53	RCP-AN560	FXD	CHIP	560Ω	±0.5%	1/10W	
R54	RCP-AN560	FXD	CHIP	560Ω	±0.5%	1/10W	
R55	RCP-AN1K	FXD	CHIP	1kΩ	±0.5%	1/10W	
R57	RCP-AN8R2K	FXD	CHIP	8.2kΩ	±0.5%	1/10W	
R58	RCP-AN100	FXD	CHIP	100Ω	±0.5%	1/10W	
R59	RCP-AN4R7K	FXD	CHIP	4.7kΩ	±0.5%	1/10W	
R60	RCP-AN4R7K	FXD	CHIP	4.7kΩ	±0.5%	1/10W	
R61	RCP-AN5R6K	FXD	CHIP	5.6kΩ	±0.5%	1/10W	
R62	RCP-AN180	FXD	CHIP	180Ω	±0.5%	1/10W	
R64	RCP-AN12	FXD	CHIP	12Ω	±0.5%	1/10W	
R79	RCP-AN10K	FXD	CHIP	10kΩ	±0.5%	1/10W	
R80	RCP-AN4R7K	FXD	CHIP	4.7kΩ	±0.5%	1/10W	
R81	RCP-AN56	FXD	CHIP	56Ω	±0.5%	1/10W	
R82	RCP-AN390	FXD	CHIP	390Ω	±0.5%	1/10W	
R83	RCP-AN3R3K	FXD	CHIP	3.3kΩ	±0.5%	1/10W	
R84	RCP-AN1K	FXD	CHIP	1kΩ	±0.5%	1/10W	
R85	RCP-AN470	FXD	CHIP	470Ω	±0.5%	1/10W	
R87	RCP-AN150	FXD	CHIP	150Ω	±0.5%	1/10W	
R102	RCP-AN22K	FXD	CHIP	22kΩ	±0.5%	1/10W	
R103	RCP-AN22K	FXD	CHIP	22kΩ	±0.5%	1/10W	
R104	RCP-AN1R5K	FXD	CHIP	1.5kΩ	±0.5%	1/10W	
R105	RCP-AN2R4K	FXD	CHIP	2.4kΩ	±0.5%	1/10W	
R106	RCP-AN1K	FXD	CHIP	1kΩ	±0.5%	1/10W	
R107	RCP-AN100	FXD	CHIP	100Ω	±0.5%	1/10W	
R108	RCP-AN68	FXD	CHIP	68Ω	±0.5%	1/10W	
R109	RCP-AN100	FXD	CHIP	100Ω	±0.5%	1/10W	
R110	RCP-AN68	FXD	CHIP	68Ω	±0.5%	1/10W	
R111	RCP-AN100	FXD	CHIP	100Ω	±0.5%	1/10W	
R112	RCP-AN68	FXD	CHIP	68Ω	±0.5%	1/10W	
R113	RCP-AN51	FXD	CHIP	51Ω	±0.5%	1/10W	
R115	RCP-AN150	FXD	CHIP	150Ω	±0.5%	1/10W	
R116	RCP-AN33	FXD	CHIP	33Ω	±0.5%	1/10W	
R117	RCP-AN150	FXD	CHIP	150Ω	±0.5%	1/10W	
R118	RCP-AN2R7K	FXD	CHIP	2.7kΩ	±0.5%	1/10W	
R119	RCP-AN51	FXD	CHIP	51Ω	±0.5%	1/10W	
R120	RCP-AN1R8K	FXD	CHIP	1.8kΩ	±0.5%	1/10W	

R3261/3361
YTO SYNTHE
BLK-015649 (8/8)

Parts No.	Advantest Stock No.	Description					Note
R121	RCP-AN1K	FXD	CHIP	1kΩ	±0.5%	1/10W	
R122	RVR-DF2K	VAR		2kΩ	±20%	1/2W	
R123	RCP-AN22	FXD	CHIP	22Ω	±0.5%	1/10W	
R124	RCP-AN10	FXD	CHIP	10Ω	±0.5%	1/10W	
R125	RCP-AN33	FXD	CHIP	33Ω	±0.5%	1/10W	
U1	SIA-1676	Bipolar Analog IC 1GHz Amp					
U2	SIA-373S	COMPARATOR Dual Low Noise Low Offset					
U5	SIA-1675	Bipolar Analog IC 1GHz Amp					
U6	SIC-565	1GHz PRESCALER					
U7	SIA-1675	Bipolar Analog IC 1GHz Amp					
U8	SIA-1676	Bipolar Analog IC 1GHz Amp					
U10	SIC-555	LOW POWER 2-MODULUS PRESCALER					
U11	SIM-145146	4-BIT DATA BUS INPUT PLL FREQ SYNTHE					
U12	SIT-74S112-1	DUAL J-K FLIP-FLOP					
U13	SIT-74S00S-1	QUAD 2-INPUT NAND					
U14	SIT-74HC04S	HEX INVERTER					
U15	SIA-1676	Bipolar Analog IC 1GHz Amp					
U16	SIT-74F74S	DUAL D-TYPE FLIP-FLOP					
U17	SIT-74F112S	DUAL J-K FLIP-FLOP					
U18	SIT-74F00S	QUAD 2-INPUT NAND					
U19	SIA-398	MONOLITHIS SAMPLE AND HOLD CIRCUITS					
U24	SIA-1675	Bipolar Analog IC 1GHz Amp					
U25	SIC-12013	DUAL MODULUS PRESCALER					

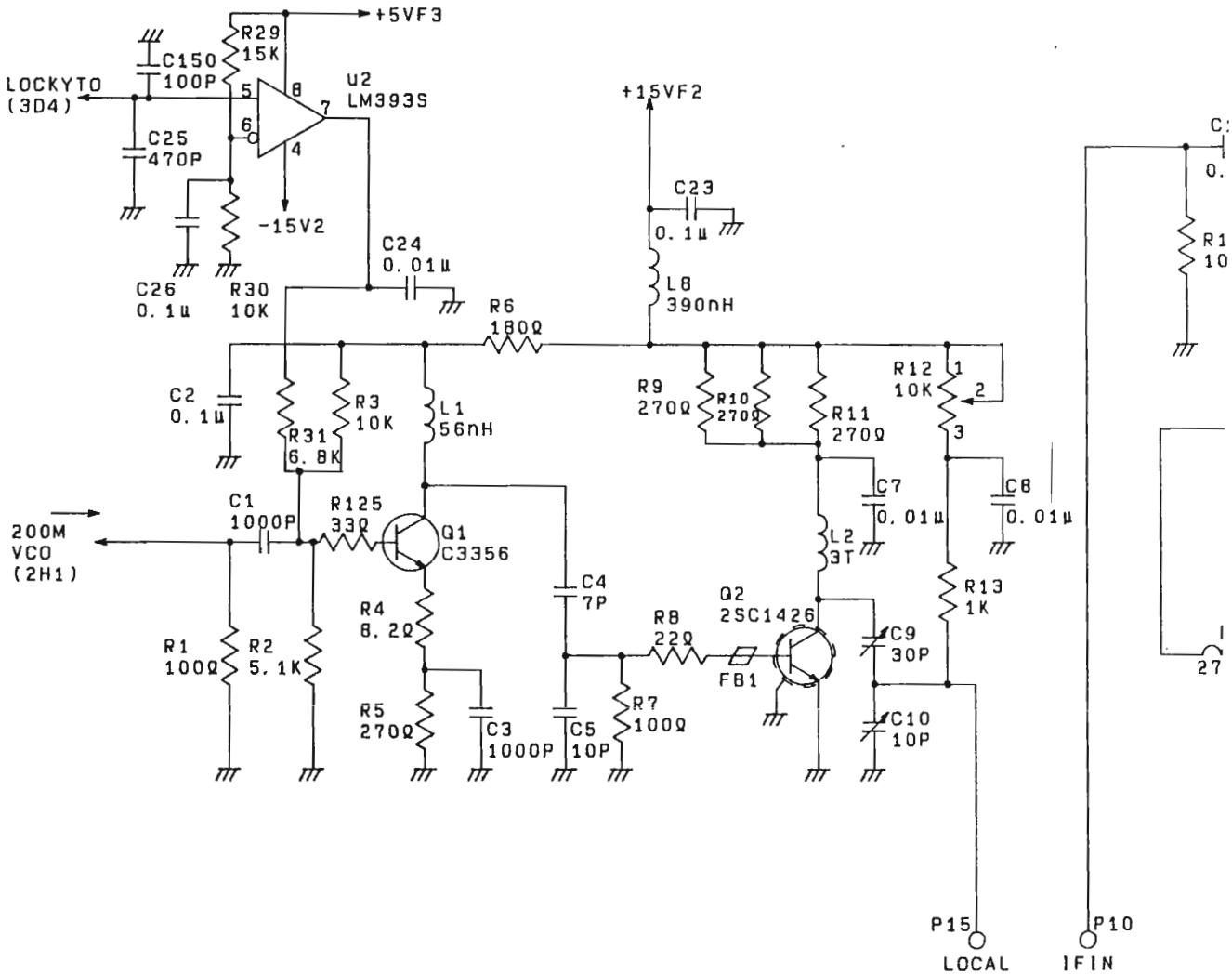
+5VF3
R29
15K
C150
100P
LOCKYTO
(3D4)
C25
470P
U2
LM393S
-15V2
C26
0.1μ
R30
10K
C24
0.01μ
+15VF2
C23
0.1μ
L8
390nH
R6
180Ω
C2
0.1μ
R31
6.8K
R3
10K
L1
56nH
R9
270Ω
R10
270Ω
R11
270Ω
R12
10K
C7
0.01μ
C8
0.01μ
200M
VCO
(2H1)
C1
1000P
R125
33Ω
Q1
C3356
L2
3T
R13
1K
C4
7P
Q2
2SC1426
R4
8.2Ω
R8
22Ω
FB1
C9
30P
R1
100Ω
R2
5.1K
R5
270Ω
C3
1000P
C5
10P
R7
100Ω
C10
10P
P15
LOCAL
P10
IFIN

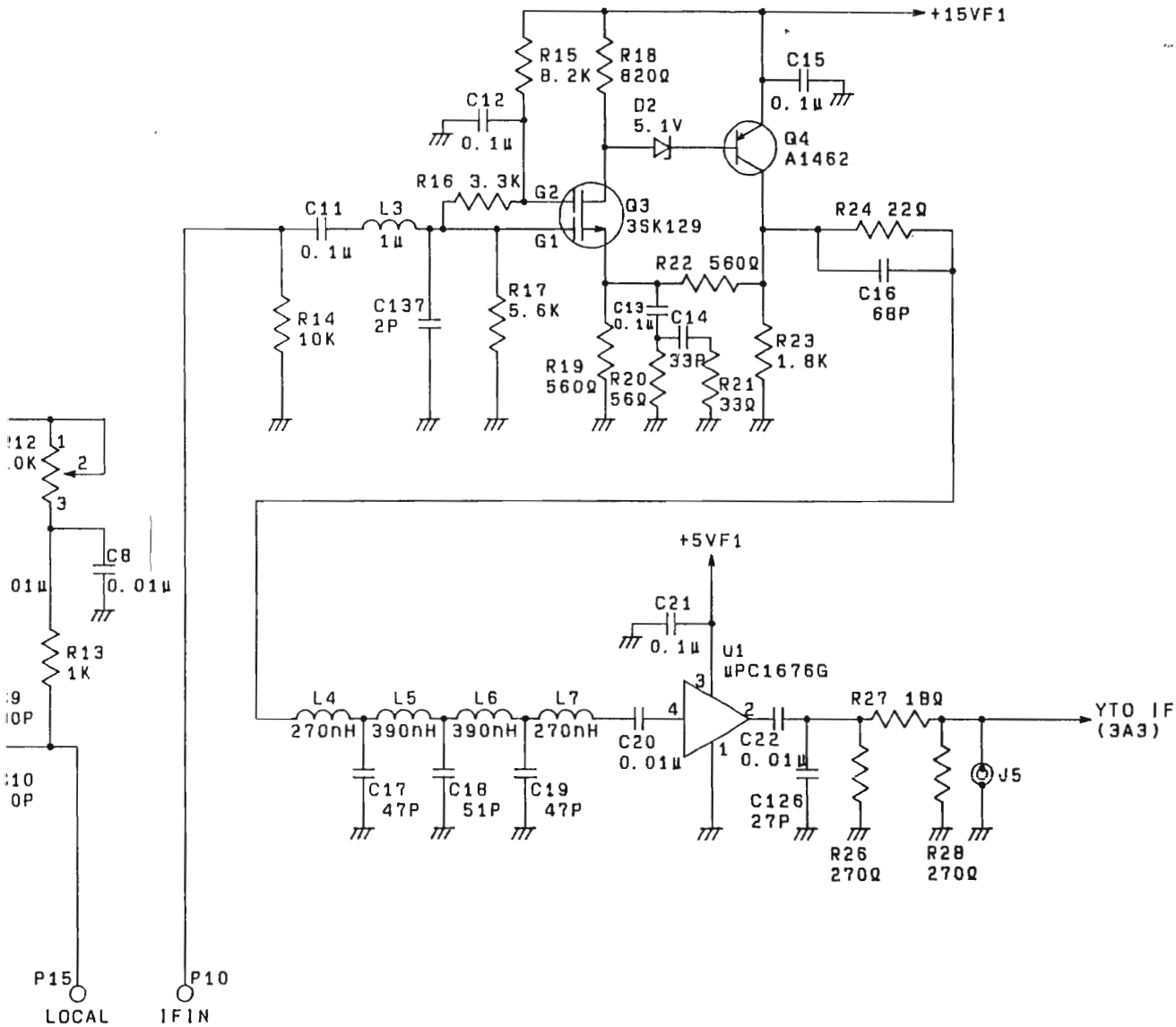

R3261/3361 YTO SYNTHE
BLK-015649 1/4

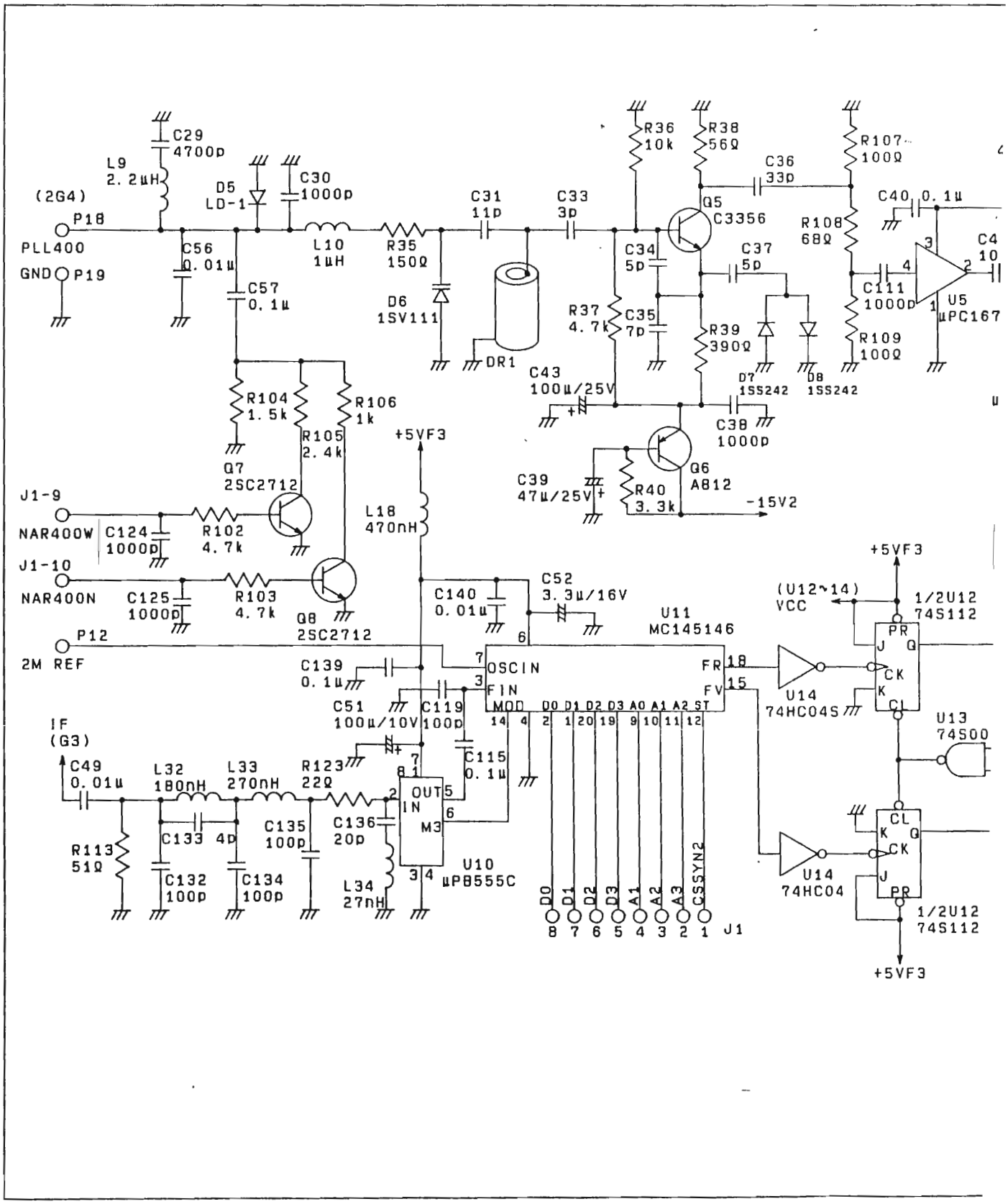
C29
4700p
L9
2.2μH
(2G4)
P18
PLL400
GND
P19
D5
LD-1
C30
1000p
C56
0.01μ
C57
0.1μ
L10
1μH
R35
150Ω
D6
1SV111
C31
11p
DR1
C33
3p
R36
10k
R38
56Ω
Q5
C3356
C36
33p
C34
5p
C37
5p
R37
4.7k
C35
7p
R39
390Ω
D7
1SS242
D8
1SS242
R107
100Ω
R108
68Ω
C40
0.1μ
C111
1000p
R109
100Ω
U5
μPC167
C43
100μ/25V
C38
1000p
Q6
A812
C39
47μ/25V
R40
3.3k
-15V2
R104
1.5k
R105
2.4k
R106
1k
Q7
2SC2712
Q8
2SC2712
+5VF3
L18
470nH
J1-9
NAR400W
C124
1000p
R102
4.7k
J1-10
NAR400N
C125
1000p
R103
4.7k
P12
2M REF
C139
0.1μ
C140
0.01μ
C52
3.3μ/16V
U11
MC145146
OSCIN
FIN
MOD
FR
FV
D0 D1 D2 D3 A0 A1 A2 ST
C51
100μ/10V
C119
100p
C115
0.1μ
IF
(G3)
C49
0.01μ
L32
180nH
L33
270nH
R123
22Ω
OUT
IN
M3
U10
μPB555C
R113
51Ω
C133
4p
C132
100p
C134
100p
C135
100p
C136
20p
L34
27nH
D0 D1 D2 D3 A1 A2 A3 CSSYN2
8 7 6 5 4 3 2 1 J1
(U12~14)
VCC
+5VF3
1/2U12
74S112
U14
74HC04S
U13
74S00
U14
74HC04
1/2U12
74S112
+5VF3

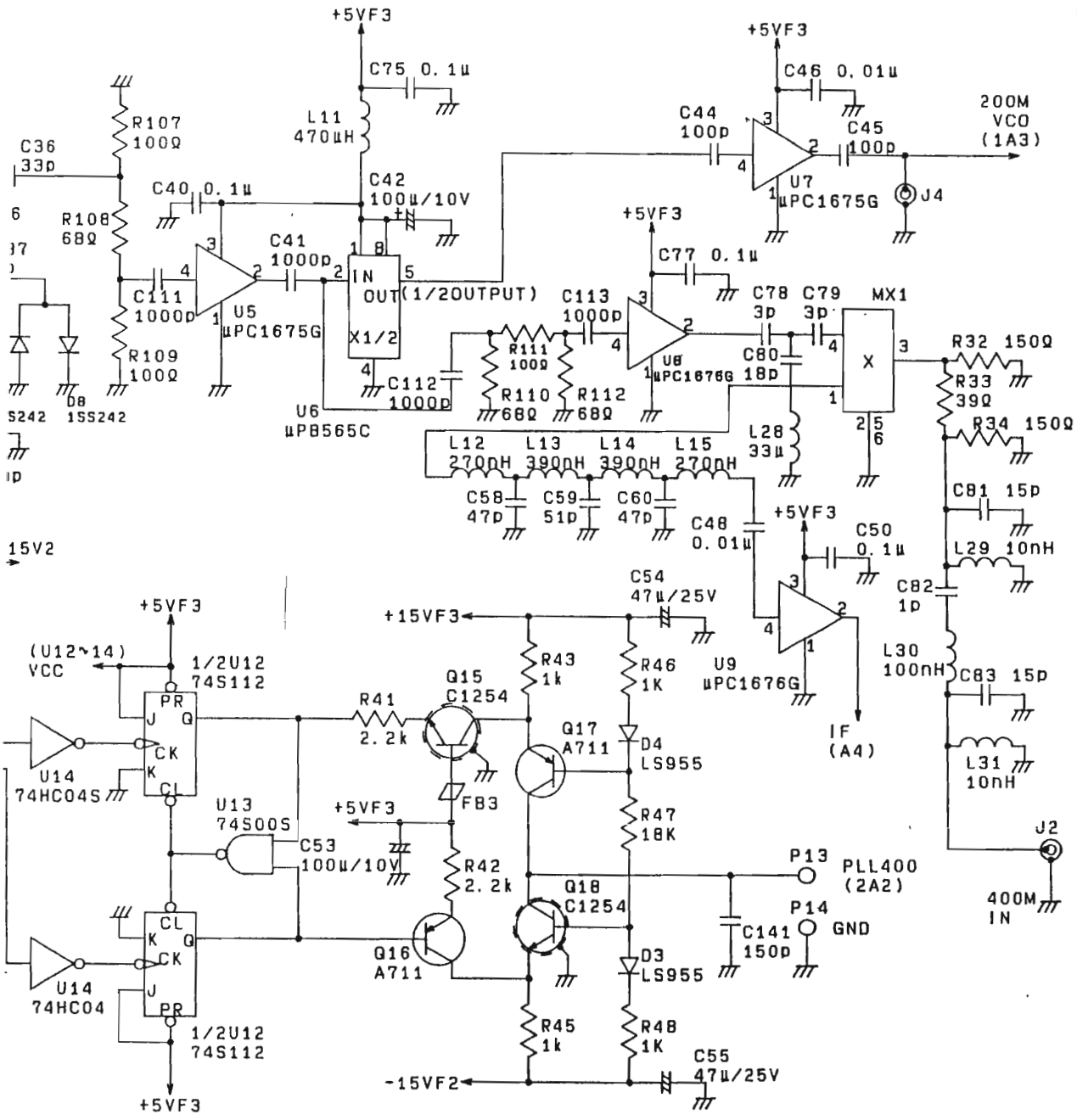

R3261/3361 YTO SYNTHE
BLK-015649 2/4

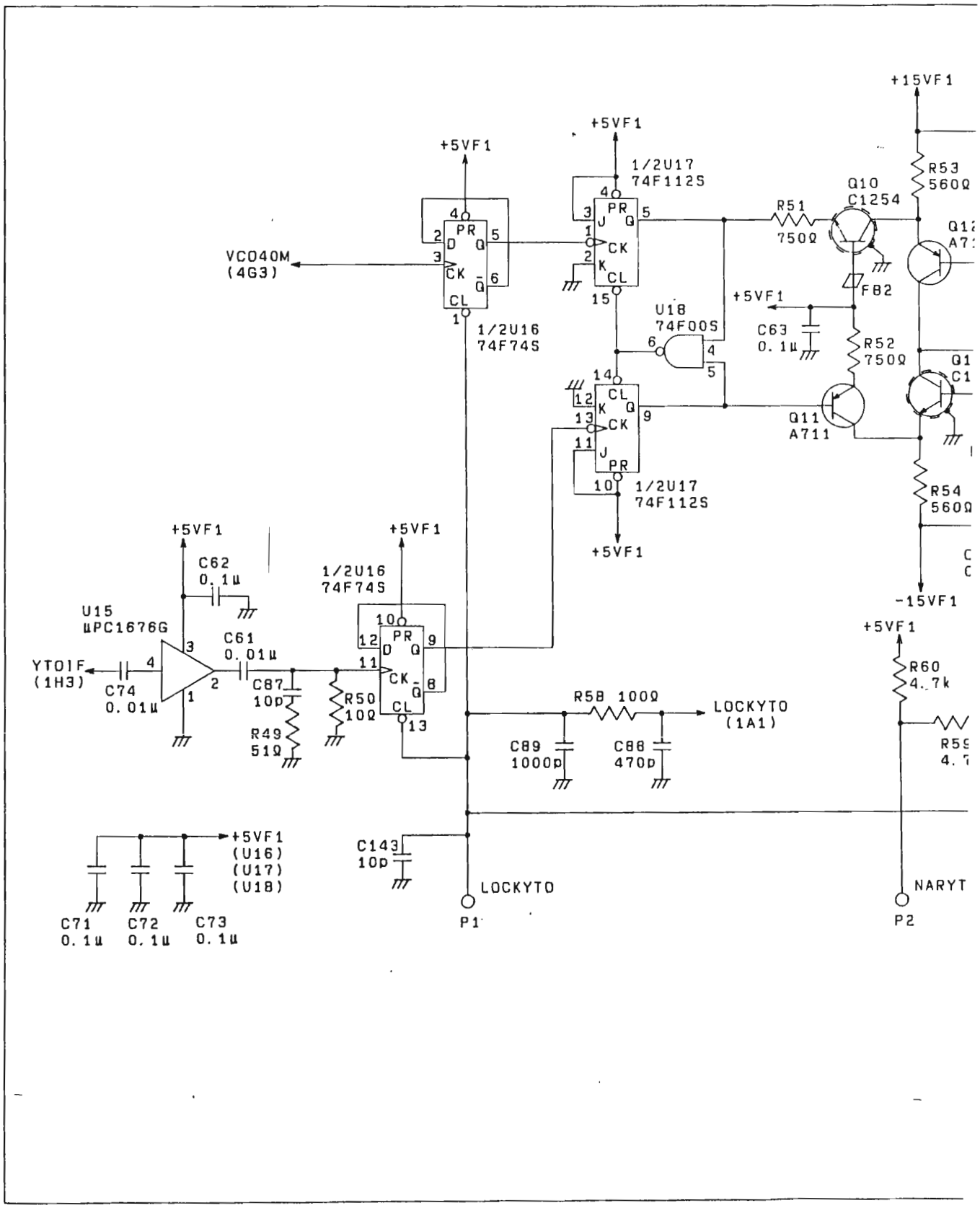
+15VF1
+5VF1
1/2U17
74F112S
R53
560Ω
Q10
C1254
R51
750Ω
VCO40M
(4G3)
1/2U16
74F74S
FB2
U18
74F00S
C63
0.1μ
R52
750Ω
Q11
A711
R54
560Ω
-15VF1
C62
0.1μ
U15
μPC1676G
YTO1F
(1H3)
C74
0.01μ
C61
0.01μ
C87
10p
R49
51Ω
R50
10Ω
R58 100Ω
LOCKYTO
(1A1)
C89
1000p
C88
470p
R60
4.7k
C143
10p
+5VF1
(U16)
(U17)
(U18)
C71
0.1μ
C72
0.1μ
C73
0.1μ
LOCKYTO
P1
NARYT
P2

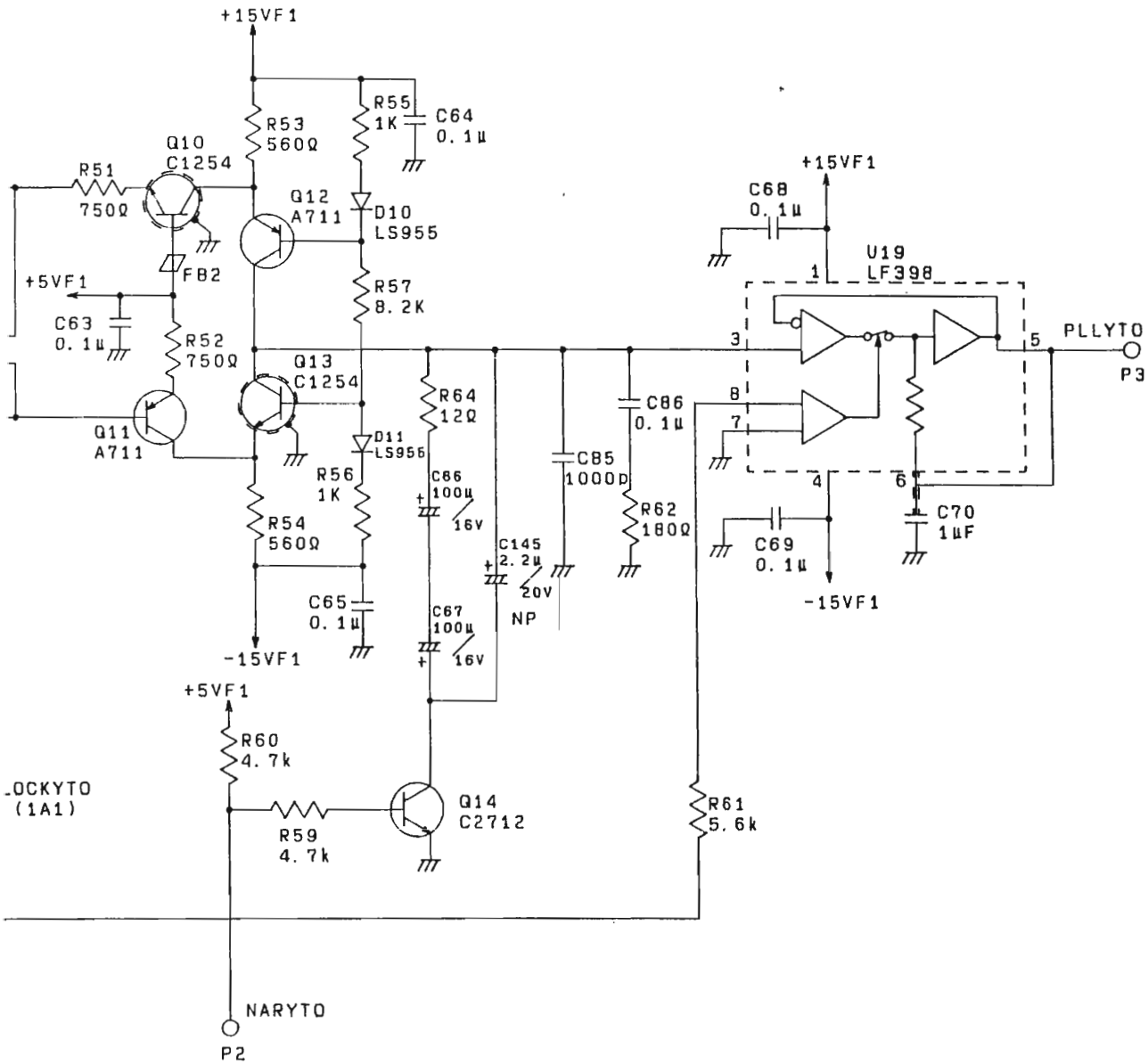

R3261/3361 YTO SYNTHE
BLK-015649 3/4

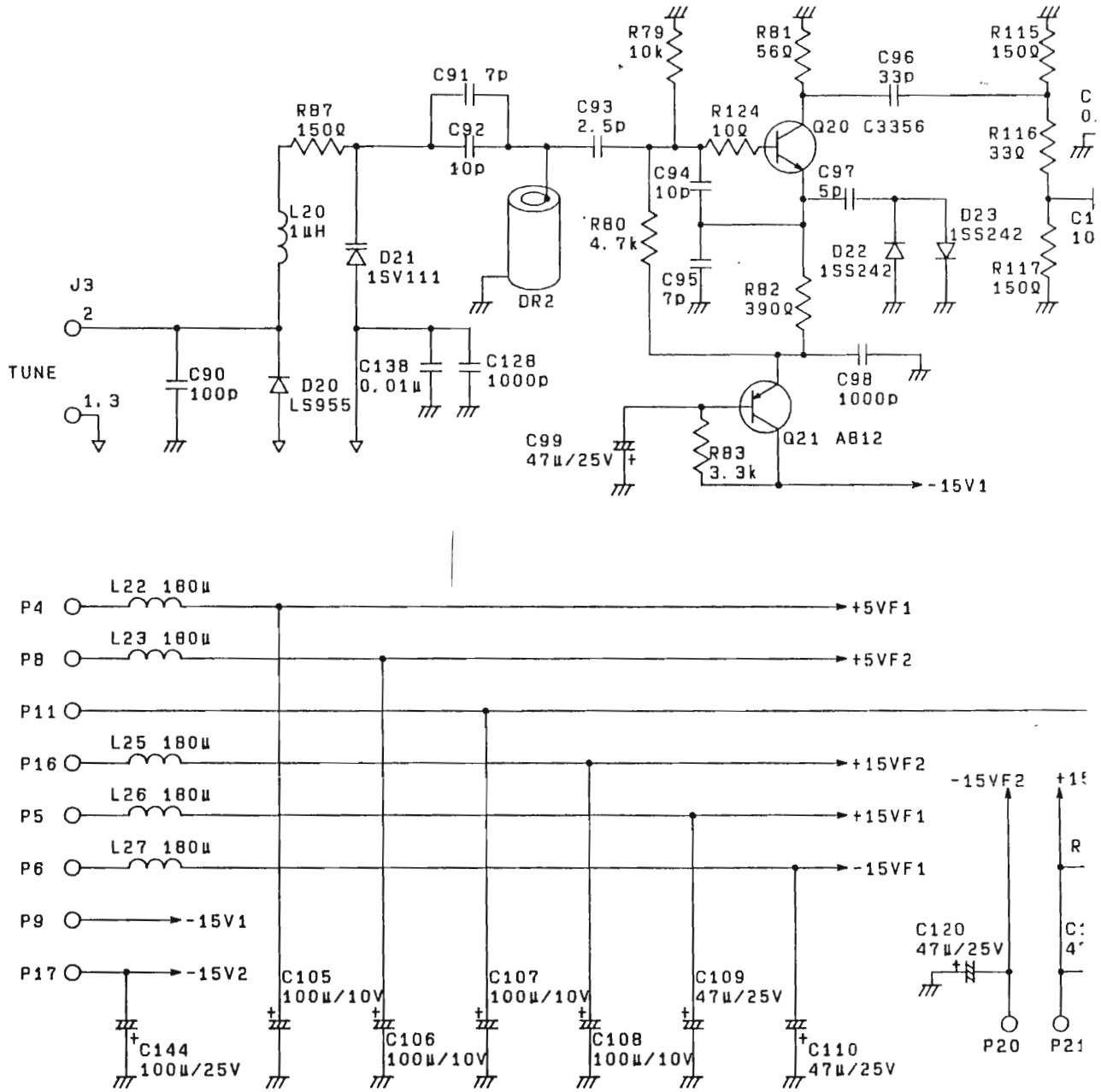
R79
10k
R81
56Ω
C96
33p
R115
150Ω
C91 7p
R87
150Ω
C92
10p
C93
2.5p
R124
10Ω
Q20 C3356
R116
33Ω
C94
10p
C97
5p
L20
1μH
R80
4.7k
D23
1SS242
D21
1SV111
D22
1SS242
R117
150Ω
J3
2
DR2
C95
7p
R82
390Ω
TUNE
C90
100p
D20
LS955
C138
0.01μ
C128
1000p
C98
1000p
1.3
C99
47μ/25V
R83
3.3k
Q21 A812
-15V1
P4
L22 180μ
+5VF1
P8
L23 180μ
+5VF2
P11
P16
L25 180μ
+15VF2
-15VF2
P5
L26 180μ
+15VF1
P6
L27 180μ
-15VF1
P9
-15V1
P17
-15V2
C120
47μ/25V
C105
100μ/10V
C107
100μ/10V
C109
47μ/25V
C144
100μ/25V
C106
100μ/10V
C108
100μ/10V
C110
47μ/25V
P20
P21

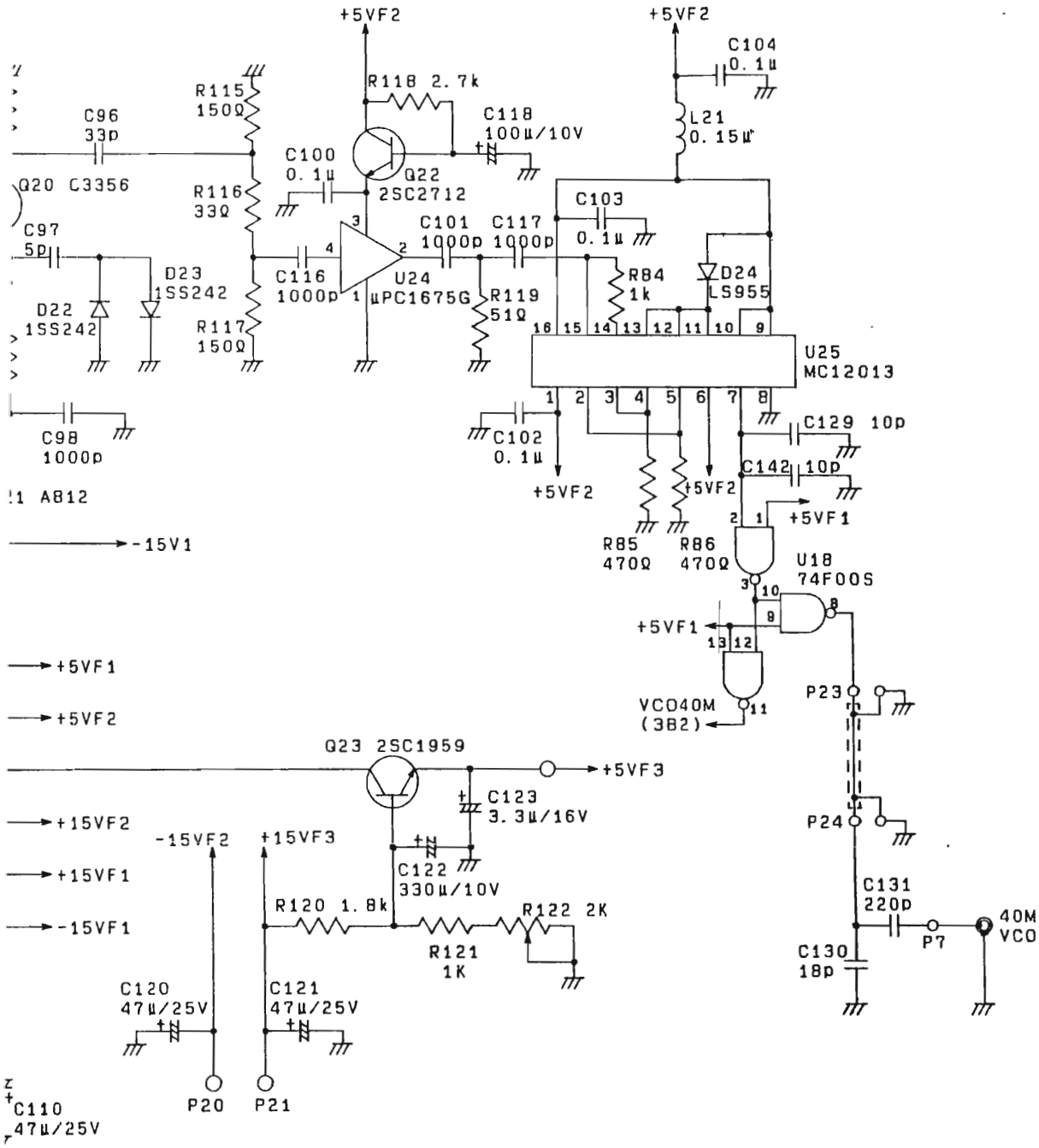

R3261/3361 YTO SYNTHE
BLK-015649 4/4

R3261/3361
INPUT ATT
BTB-015641 (1/1)

Parts No.	Advantest Stock No.	Description					Note
C1	CCP-ADR47U50V	FXD	CHIP	0.47μF	+80%, -20%	50V	
C2	CCP-ADR47U50V	FXD	CHIP	0.47μF	+80%, -20%	50V	
K1	KRL-000350	RELAY					
K2	KRL-000350-2	RELAY					
R1	RMF-BQ96R2QFK-1	FXD	METAL	96.2Ω	±1%	1/4W	
R2	RMF-BR71R2QFK-1	FXD	METAL	71.2Ω	±1%	1/4W	
R3	RCP-AN100	FXD	CHIP	100Ω	±0.5%	1/10W	
R4	RCP-BE61R1-1	FXD	CHIP	61.1Ω	±1%	1/2W	
R6	RCP-AN120	FXD	CHIP	120Ω	±0.5%	1/10W	
R7	RCP-AN130	FXD	CHIP	130Ω	±0.5%	1/10W	
R8	RCP-AN62	FXD	CHIP	62Ω	±0.5%	1/10W	
R9	RCP-AN62	FXD	CHIP	62Ω	±0.5%	1/10W	
R10	RCP-AN120	FXD	CHIP	120Ω	±0.5%	1/10W	
R11	RCP-AN130	FXD	CHIP	130Ω	±0.5%	1/10W	
R12	RCP-AN62	FXD	CHIP	62Ω	±0.5%	1/10W	

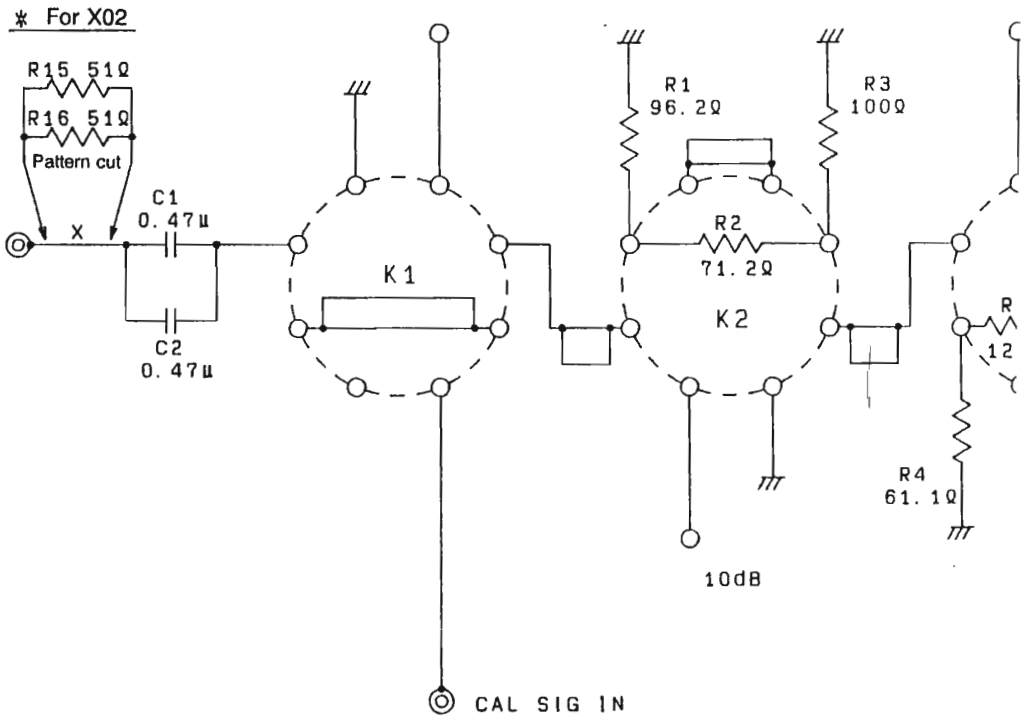
* For X02
R15 51Ω
R16 51Ω
Pattern cut
X
C1
0.47μ
C2
0.47μ
K1
R1
96.2Ω
R3
100Ω
R2
71.2Ω
K2
R4
61.1Ω
10dB
CAL SIG IN

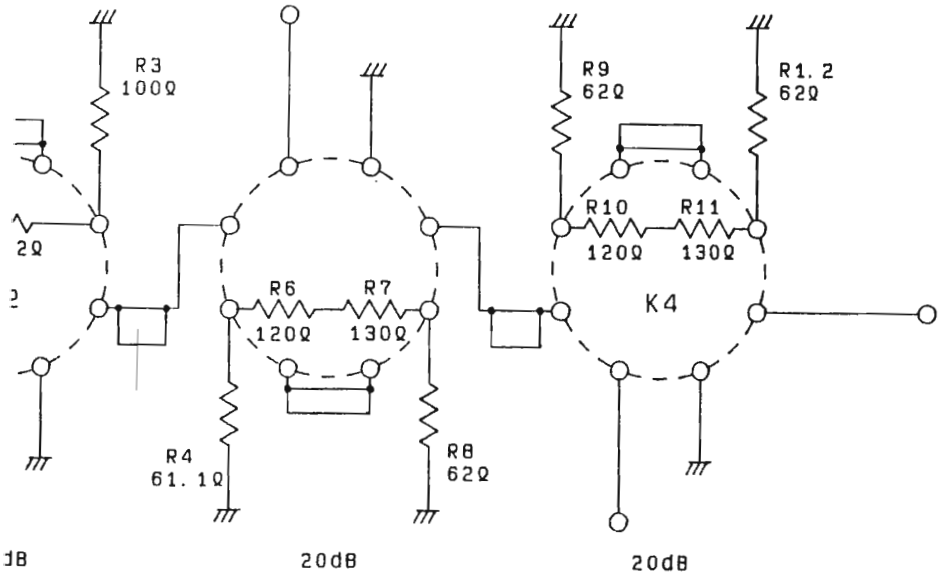

CALL ON/OFF	K1
ON	0
OFF	-12V

Loss (dB)	K2	K3	K4
0	0	0	0
10	-12V	0	0
20	0	-12V	0
30	-12V	-12V	0
40	0	-12V	-12V
50	-12V	-12V	-12V

R3261/3361 INPUT ATT
BTB-01564

R3261/3361
IST MIXER
BTB-015642 (1/1)

Parts No.	Advantest Stock No.	Description					Note
D1	SDS-DMJ4317	SCHOTTKY BARRIER SI DIODE					
R1	RCP-AH100	FXD	CHIP	100Ω	±5%	1/8W	
R2	RCP-AH470	FXD	CHIP	470Ω	±5%	1/8W	
R3	RCP-AJ100	FXD	CHIP	100Ω	±5%	1/10W	
R6	RCP-AJ100	FXD	CHIP	100Ω	±5%	1/10W	

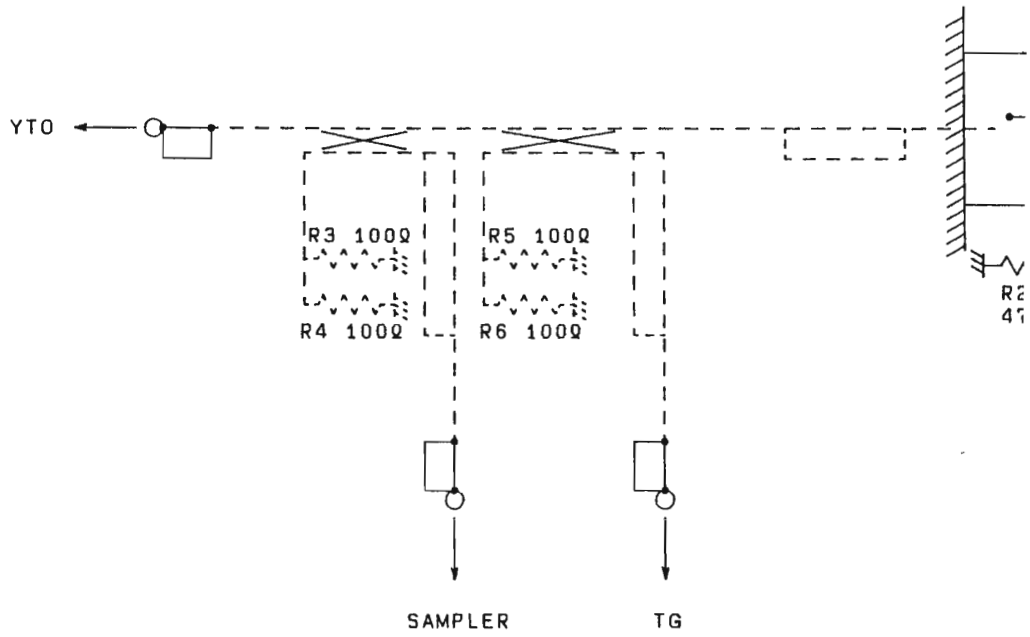
YTO
R3 100Ω
R4 100Ω
R5 100Ω
R6 100Ω
SAMPLER
TG

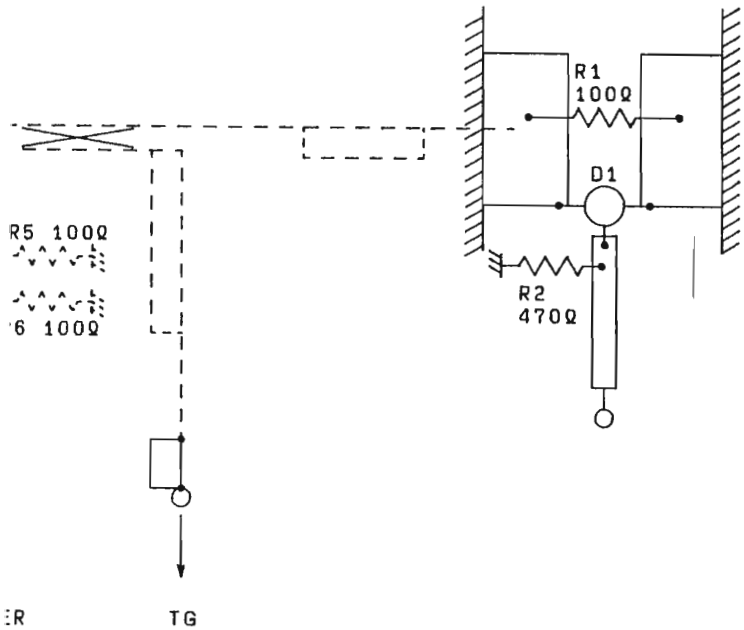

R3261/3361 1ST MIXER/COUPLER
BTB-015642

R3261/3361
2ND CONV
BTD-015644 (1/3)

Parts No.	Advantest Stock No.	Description					Note
C1	CCP-TCR1U50V	FXD	CHIP	1μF	+80%, -20%	50V	
C2	CCP-AT10PR1K	FXD	CHIP	10PF	±1PF	100V	
C3	CCP-TCR1U50V	FXD	CHIP	0.1μF	+80%, -20%	50V	
C4	CCP-BA100P50V	FXD	CHIP	100PF	±10%	50V	
C5	CCK-BX33U25V	FXD	ELECT	33μF	±20%	25V	
C6	CCP-ADR47U50V	FXD	CHIP	0.47μF	+80%, -20%	50V	
C7	CCP-BA100P50V	FXD	CHIP	100PF	±10%	50V	
C8	CCP-BA100P50V	FXD	CHIP	100PF	±10%	50V	
C9	CCP-BAR01U50V	FXD	CHIP	0.01μF	±10%	50V	
C10	CCP-BA100P50V	FXD	CHIP	100PF	±10%	50V	
C11	CCP-BA10P50V	FXD	CHIP	10PF	±0.5PF	50V	
C12	CCP-BA10P50V	FXD	CHIP	10PF	±0.5PF	50V	
C13	CCP-BA100P50V	FXD	CHIP	100PF	±10%	50V	
C14	CCP-BA10P50V	FXD	CHIP	10PF	±0.5PF	50V	
C15	CCP-BA100P50V	FXD	CHIP	100PF	±10%	50V	
C16	CCP-BA100P50V	FXD	CHIP	100PF	±10%	50V	
C17	CCP-BAR01U50V	FXD	CHIP	0.01μF	±10%	50V	
C18	CCP-BA1000P50V	FXD	CHIP	1000PF	±10%	50V	
C19	CCP-BAR01U50V	FXD	CHIP	0.01μF	±10%	50V	
C20	CCP-BAR01U50V	FXD	CHIP	0.01μF	±10%	50V	
C21	CTM-BM10P	VAR		10PF	+50%, -0%	100V	
C22	CCP-BA5P50V	FXD	CHIP	5PF	±0.5PF	50V	
C23	CCP-BA5P50V	FXD	CHIP	5PF	±0.5PF	50V	
C30	CCP-BA15P50V	FXD	CHIP	15PF	±5%	50V	
C31	CCP-BA1000P50V	FXD	CHIP	1000PF	±10%	50V	
C32	CCP-BAR01U50V	FXD	CHIP	0.01μF	±10%	50V	
C34	CCP-BA1000P50V	FXD	CHIP	1000PF	±10%	50V	
C35	CCP-BAR01U50V	FXD	CHIP	0.01μF	±10%	50V	
C37	CCP-BA1000P50V	FXD	CHIP	1000PF	±10%	50V	
C38	CCP-BA2P50V	FXD	CHIP	2PF	±0.25PF	50V	
C39	CCP-BA1000P50V	FXD	CHIP	1000PF	±10%	50V	
C41	CCP-BAR01U50V	FXD	CHIP	0.01μF	±10%	50V	
C42	CCP-BA2P50V	FXD	CHIP	2PF	±0.25PF	50V	
C43	CCP-BAR01U50V	FXD	CHIP	0.01μF	±10%	50V	
C44	CCP-BA1000P50V	FXD	CHIP	1000PF	±10%	50V	
D1	SDS-1SS101	SCHOTTKY BARRIER SI DIODE UHF MIXER					
D2	SDZ-W120	ZENER DIODE					
D5	SDS-ND587T	MIXER DIODE					
DR1	DXD-001691-1	DR	4GHz				
DR3	DXD-001266	DR	3.72GHz				

R3261/3361
2ND CONV
BTD-015644 (2/3)

Parts No.	Advantest Stock No.	Description					Note
FL1	DFN-001089	B.P.F	226.4MHz				
J1	JCF-BA001JX01	CONNECTOR					
L1	LCL-A00671	COIL		(CUSTOM DEVICE)			
L3	LCL-A00785	COIL		(CUSTOM DEVICE)			
L10	LCL-A00671	COIL		(CUSTOM DEVICE)			
L11	LCL-E00934	COIL	CHIP	33nH	±20%		
L12	LCL-E00939	COIL	CHIP	82nH	±20%		
L13	LCL-E00388	COIL		(CUSTOM DEVICE)			
L14	LCL-A00063	COIL		(CUSTOM DEVICE)			
Q1	STN-2SC3604	TRANSISTOR		NPN			
Q2	STN-2SC3604	TRANSISTOR		NPN			
Q3	STN-2SC3604	TRANSISTOR		NPN			
Q10	STN-2SC3356	TRANSISTOR		NPN			
R1	RCP-AN330	FXD	CHIP	330Ω	±0.5%	1/10W	
R2	RCP-AN1K	FXD	CHIP	1kΩ	±0.5%	1/10W	
R3	RCB-AG2R7K	FXD	CAR	2.7kΩ	±5%	1/6W	
R4	RCP-AN3R3K	FXD	CHIP	3.3kΩ	±0.5%	1/10W	
R5	RCP-AN100	FXD	CHIP	100Ω	±0.5%	1/10W	
R6	RCP-AJ100	FXD	CHIP	100Ω	±5%	1/10W	
R7	RCP-AJ10K	FXD	CHIP	10kΩ	±5%	1/10W	
R8	RCP-AJ150	FXD	CHIP	150Ω	±5%	1/10W	
R9	RCP-AJ33	FXD	CHIP	33Ω	±5%	1/10W	
R10	RCP-AJ150	FXD	CHIP	150Ω	±5%	1/10W	
R11	RCP-AJ1K	FXD	CHIP	1kΩ	±5%	1/10W	
R12	RCP-AH680	FXD	CHIP	680Ω	±5%	1/8W	
R15	RCP-AJ100	FXD	CHIP	100Ω	±5%	1/10W	
R19	RCP-AJ1K	FXD	CHIP	1kΩ	±5%	1/10W	
R20	RCP-AH330	FXD	CHIP	330Ω	±5%	1/8W	
R30	RCP-AJ10K	FXD	CHIP	10kΩ	±5%	1/10W	
R31	RCP-AJ8R2	FXD	CHIP	8.2Ω	±10%	1/10W	
R32	RCP-AJ3R3K	FXD	CHIP	3.3kΩ	±5%	1/10W	
R33	RCP-AH180	FXD	CHIP	180Ω	±5%	1/8W	
R35	RCP-AJ100	FXD	CHIP	100Ω	±5%	1/10W	
R36	RCP-AJ390	FXD	CHIP	390Ω	±5%	1/10W	
R37	RCP-AJ4R7K	FXD	CHIP	4.7kΩ	±5%	1/10W	
R39	RCP-AJ220	FXD	CHIP	220Ω	±5%	1/10W	
R40	RCP-AJ68	FXD	CHIP	68Ω	±5%	1/10W	
R41	RCP-AJ470	FXD	CHIP	470Ω	±5%	1/10W	
R42	RCP-AJ68	FXD	CHIP	68Ω	±5%	1/10W	
R45	RCP-AJ10	FXD	CHIP	10Ω	±5%	1/10W	

R3261/3361
2ND CONV
BTD-015644 (3/3)

Parts No.	Advantest Stock No.	Description	Note
U1	SHB-001698-1	CUSTOM DEVICE	
U2	SHB-001698-1	CUSTOM DEVICE	
U3	SIC-UPG501B	5GHz 1/4 PRESCALER	
U4	SIC-565	1GHz PRESCALER	
U5	SIA-79L12	Voltage Regulator 12V	
U10	SIA-1676	Bipolar Analog IC 1GHz Amp	
U11	SIA-1676	Bipolar Analog IC 1GHz Amp	

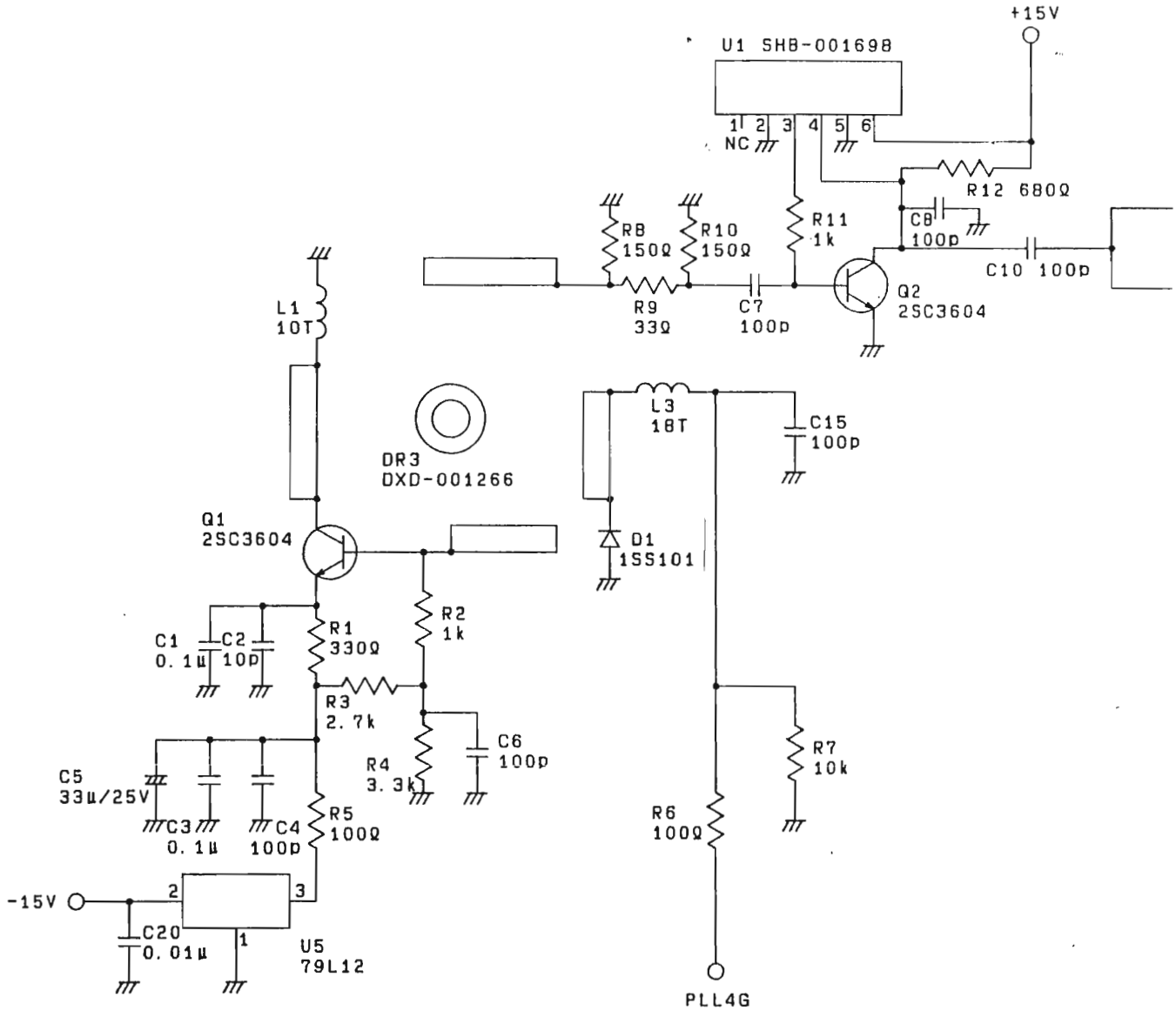
+15V
U1 SHB-001698
1 2 3 4 5 6
NC
R12 680Ω
C8 100p
R11 1k
R8 150Ω
R10 150Ω
R9 33Ω
C7 100p
Q2 2SC3604
C10 100p
L1 10T
DR3 DXD-001266
L3 18T
C15 100p
D1 1SS101
Q1 2SC3604
R1 330Ω
R2 1k
C1 0.1μ
C2 10p
R3 2.7k
C6 100p
R4 3.3k
R7 10k
C5 33μ/25V
C3 0.1μ
C4 100p
R5 100Ω
R6 100Ω
-15V
C20 0.01μ
U5 79L12
PLL4G

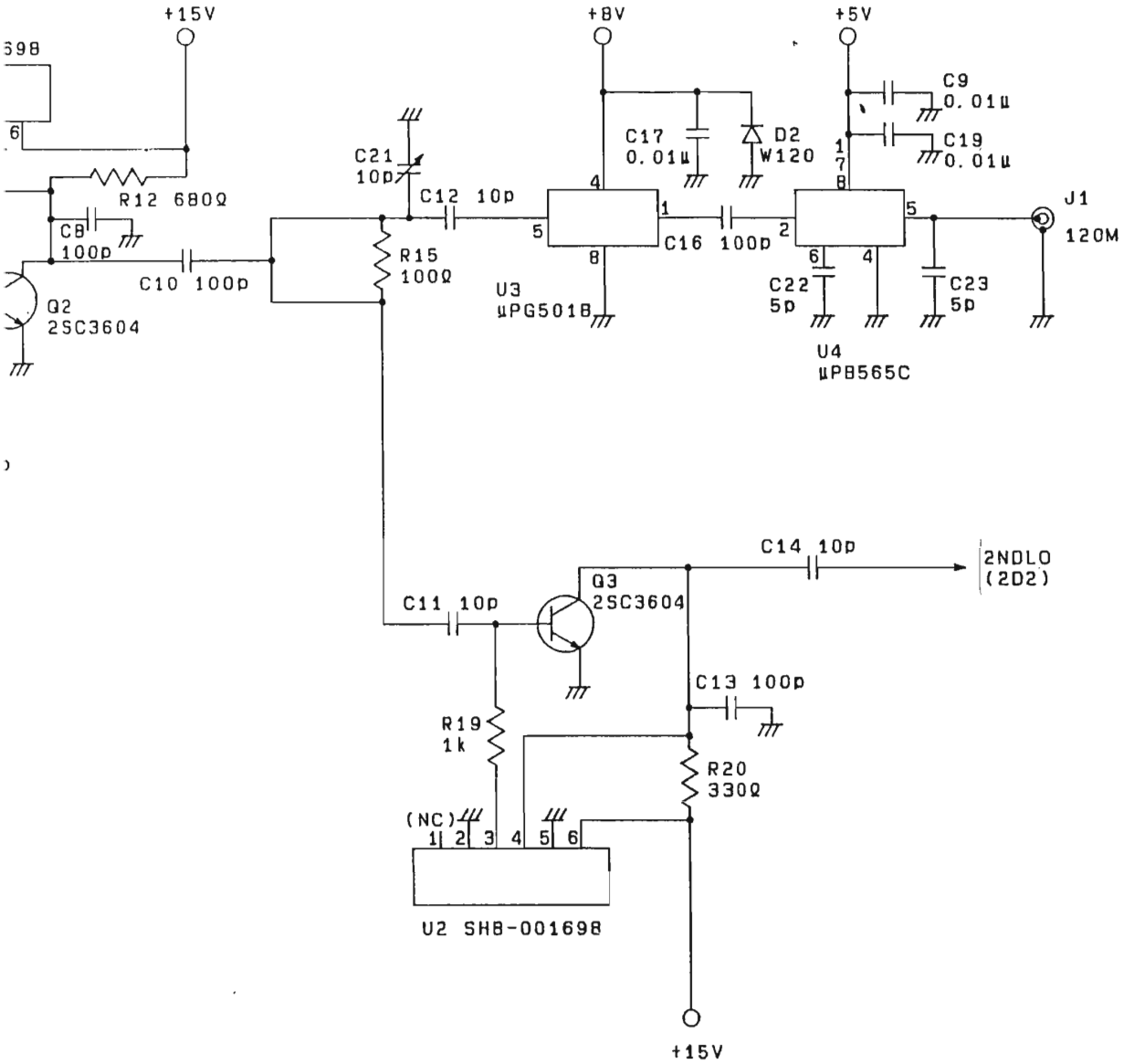

R3261/3361 2ND CONV
BTD-015644 1/2

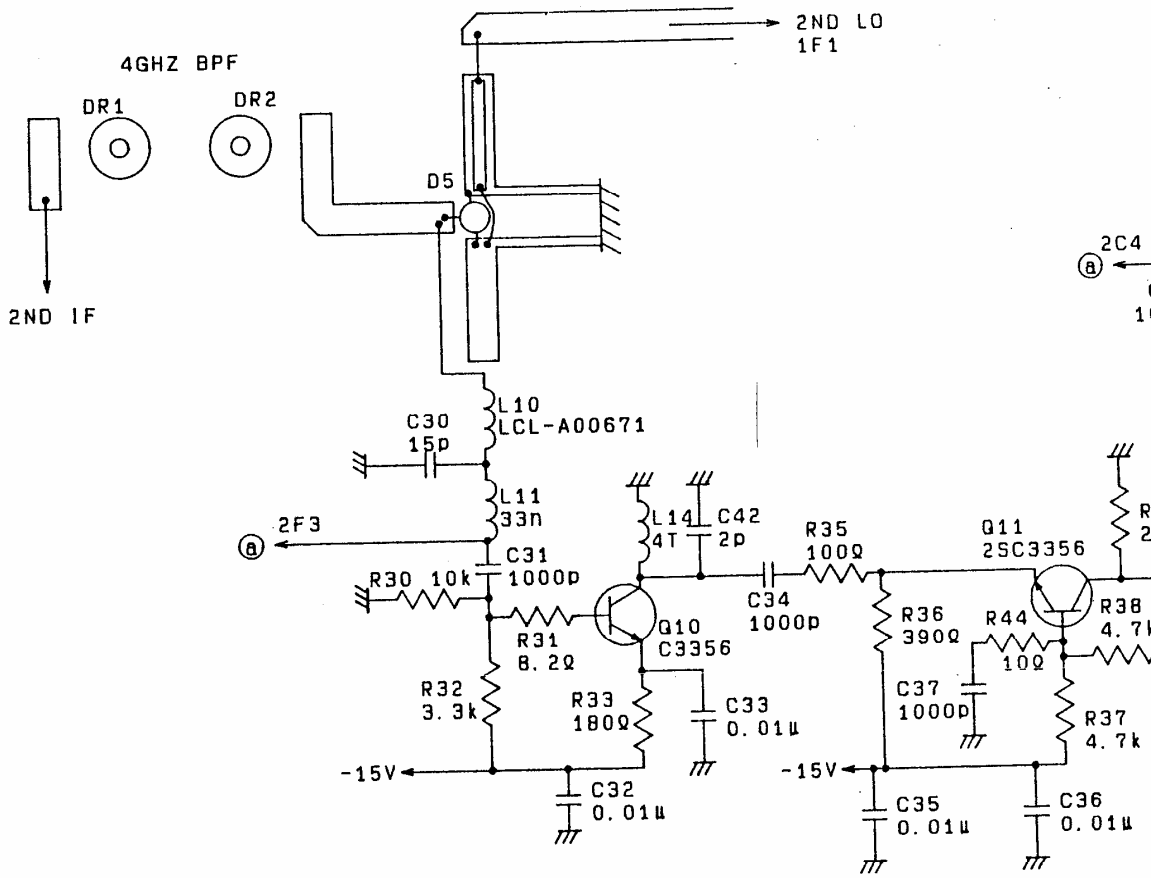
2ND LO
1F1
4GHZ BPF
DR1
DR2
D5
2ND IF
2C4
L10
LCL-A00671
C30
15p
L11
33n
2F3
C31
1000p
R30 10k
R31
8.2Ω
R32
3.3k
-15V
C32
0.01μ
L14
4T
C42
2p
Q10
C3356
R33
180Ω
C33
0.01μ
C34
1000p
R35
100Ω
R36
390Ω
C37
1000p
-15V
C35
0.01μ
Q11
2SC3356
R44
10Ω
R37
4.7k
C36
0.01μ

2ND LO
1F1

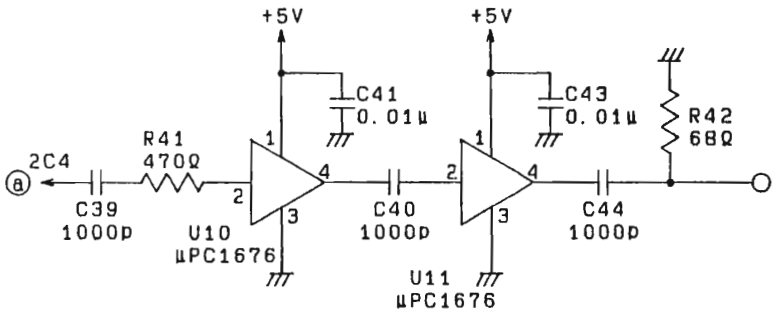

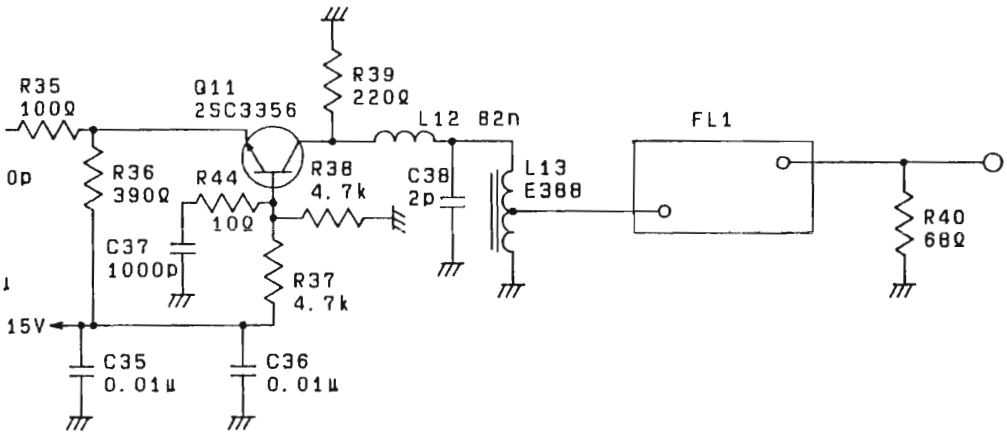

R3261/3361 2ND CONV
BTD-015644 2/2

R3261/3361
TG BLOCK
WBL-3361TG (1/1)

Parts No.	Advantest Stock No.	Description	Note
	BED-015986		
	BLB-015987		
	BLC-015680		
	BLC-015681		
	BLD-015988		
	BTB-015676		
	BTB-015722		
	BTB-015723		
C1	CFT-AQ1000P50V	FXD COAXIAL 1000PF +50%, -20% 50V	
C5	CFT-AQ1000P50V	FXD COAXIAL 1000PF +50%, -20% 50V	
CB1	ZCA-A0142X99	CABLE ASSEMBLY	
FL1	DNF-001052	EMI FILTER	
FL12	DNF-001052	EMI FILTER	
FL16	DNF-001052	EMI FILTER	
J1	JCF-AF001JX09	CONNECTOR N	
J2	JCF-AA001JX01	CONNECTOR SMA	
J3	JCF-AC001JX02	CONNECTOR UM	
J4	JTF-AB001EX04	CONNECTOR BNC	

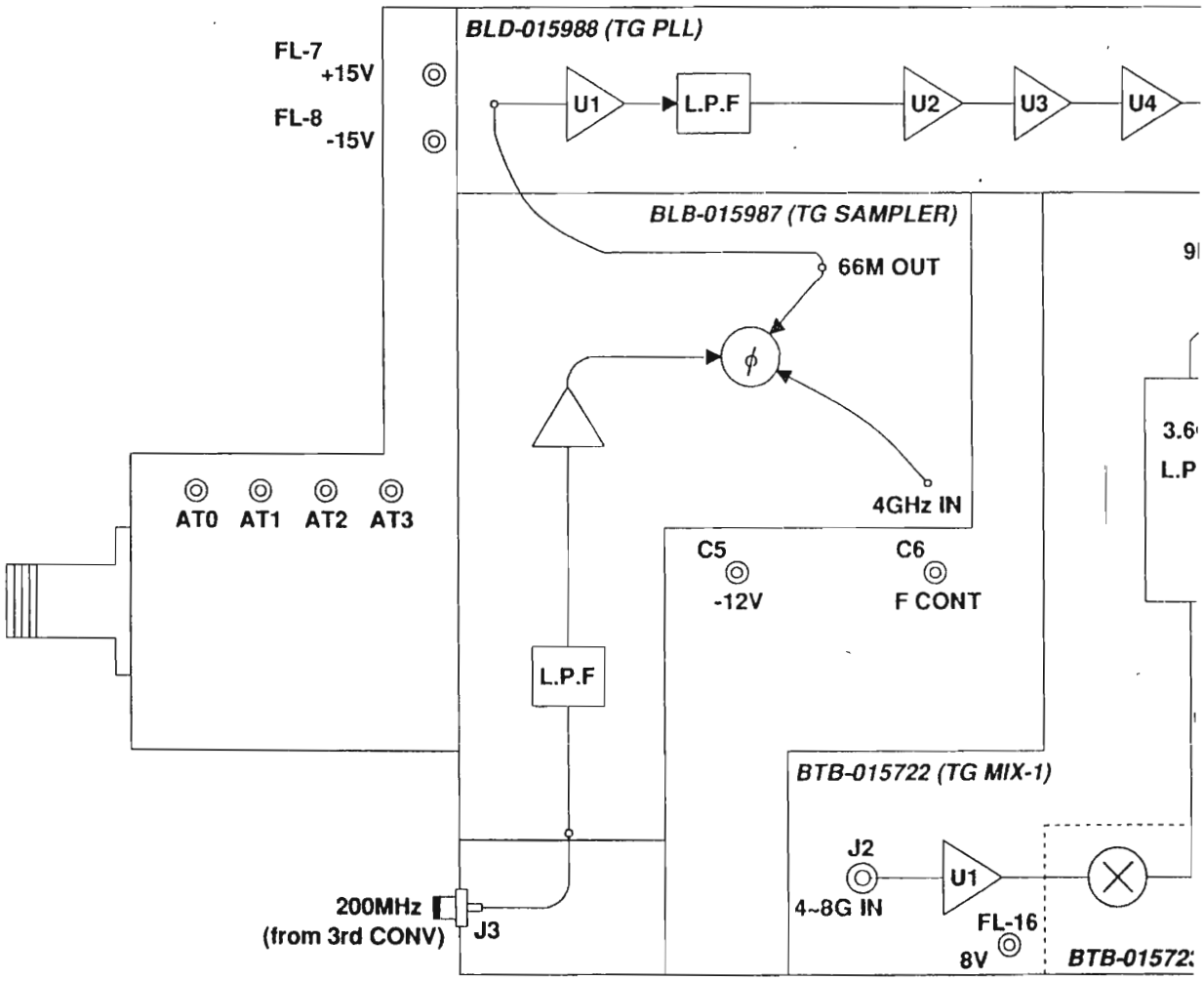
BLD-015988 (TG PLL)
FL-7
+15V
FL-8
-15V
U1
L.P.F
U2
U3
U4
BLB-015987 (TG SAMPLER)
66M OUT
4GHz IN
AT0
AT1
AT2
AT3
C5
-12V
C6
F CONT
L.P.F
BTB-015722 (TG MIX-1)
J2
4~8G IN
U1
FL-16
8V
200MHz
(from 3rd CONV)
J3

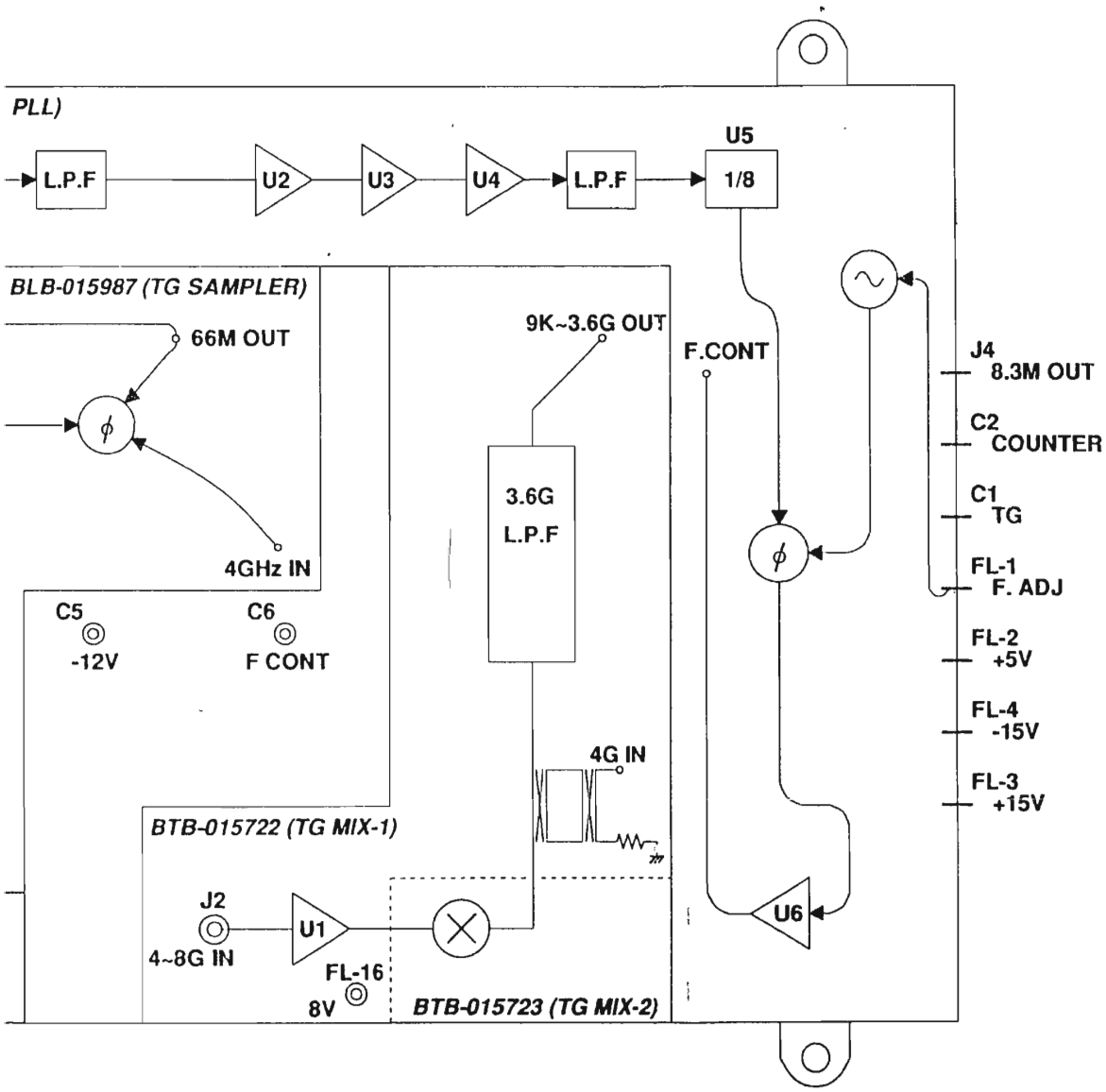

CIRCUIT LAYOUT
TG BLOCK 1
WBL-3361TG
BLB-015987
BLD-015988
BTB-015722
BTB-015723

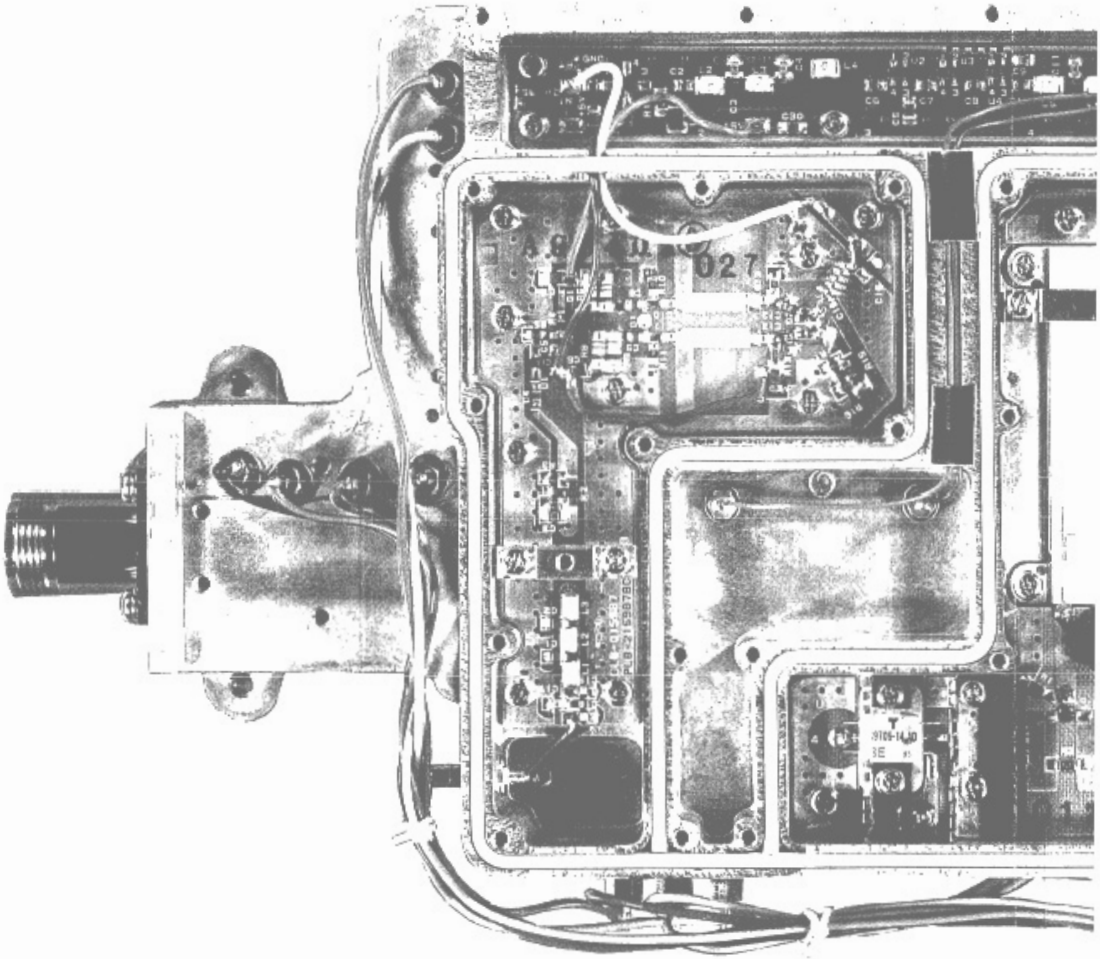

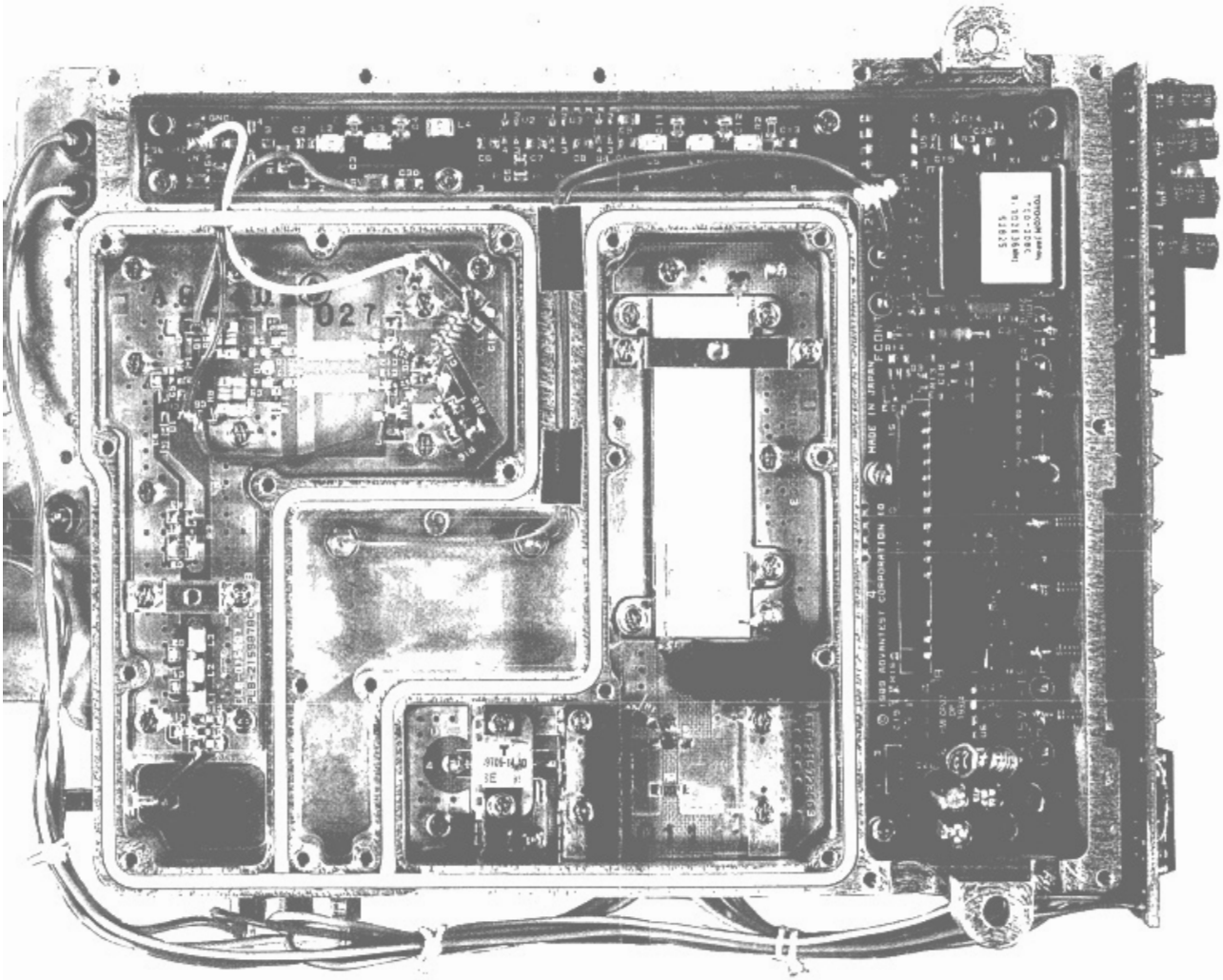

PARTS LOCATION
TG BLOCK 1
WBL-3361TG
BLB-015987
BLD-015988
BTB-015722
BTB-015723

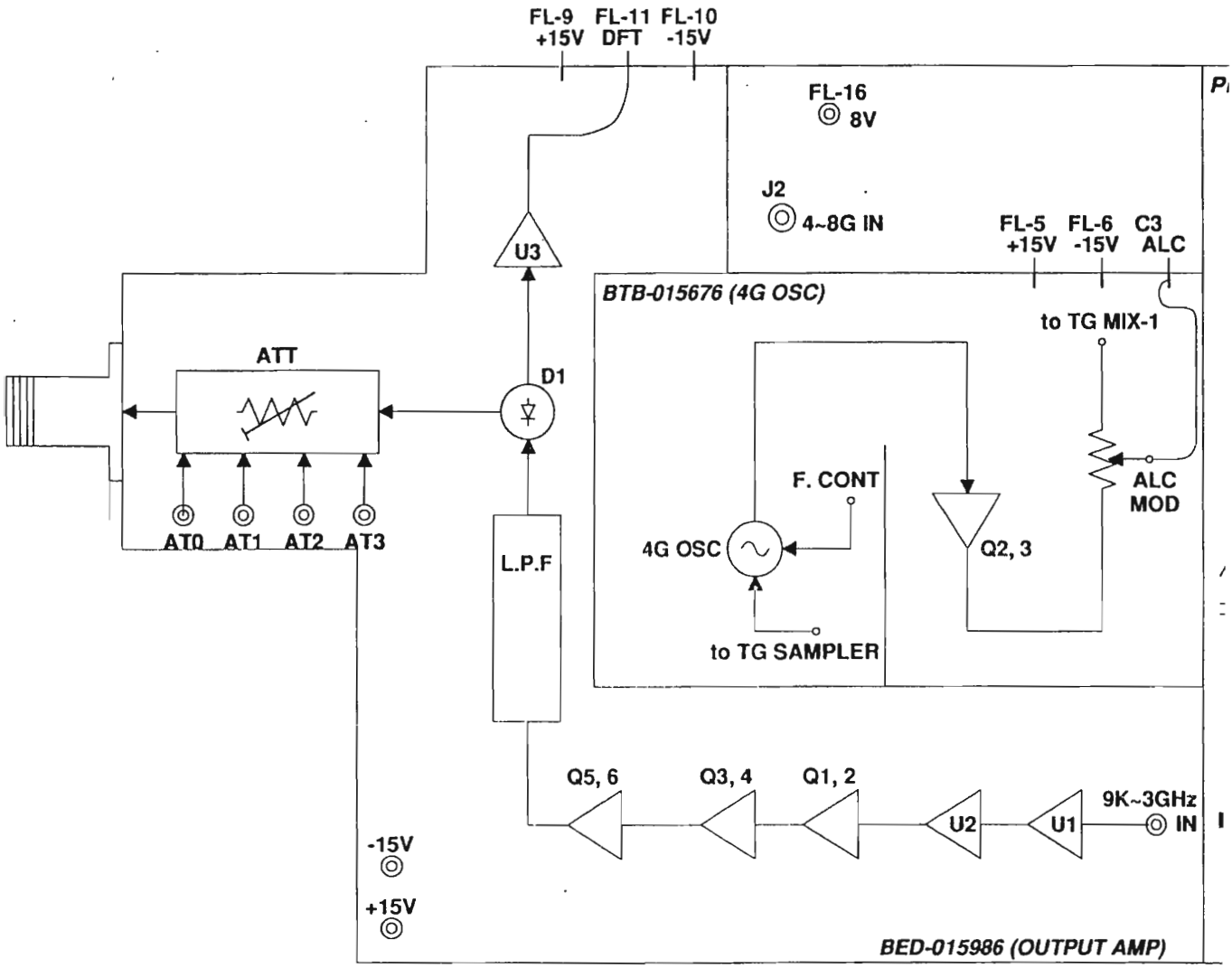
FL-9
+15V
FL-11
DFT
FL-10
-15V
FL-16
8V
J2
4~8G IN
FL-5
+15V
FL-6
-15V
C3
ALC
U3
BTB-015676 (4G OSC)
to TG MIX-1
ATT
D1
F. CONT
ALC
MOD
AT0
AT1
AT2
AT3
4G OSC
Q2, 3
L.P.F
to TG SAMPLER
Q5, 6
Q3, 4
Q1, 2
U2
U1
9K~3GHz
IN
-15V
+15V
BED-015986 (OUTPUT AMP)

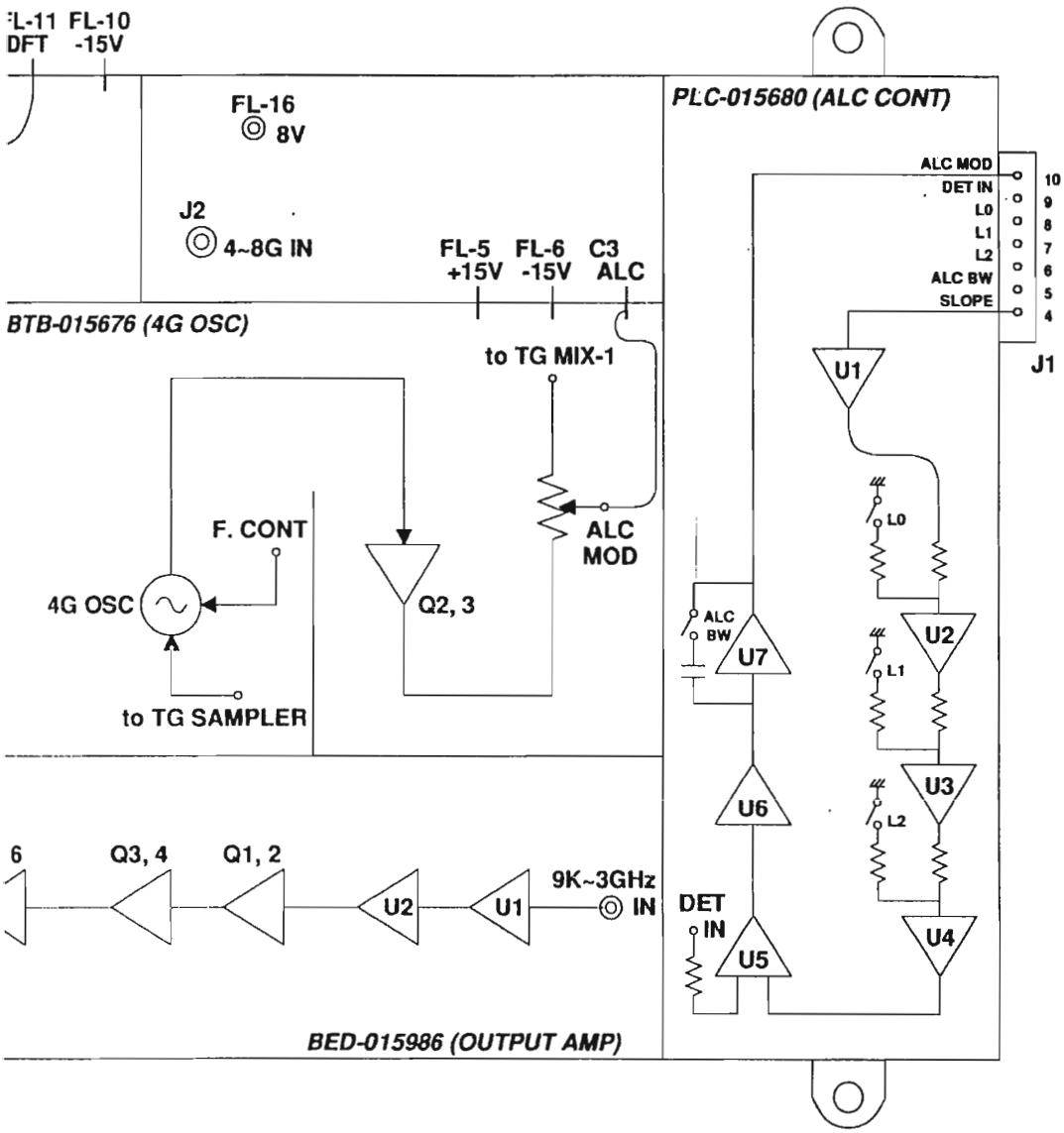

CIRCUIT LAYOUT
TG BLOCK 2
WBL-3361TG
BED-015986
BLC-015680
BTB-015676

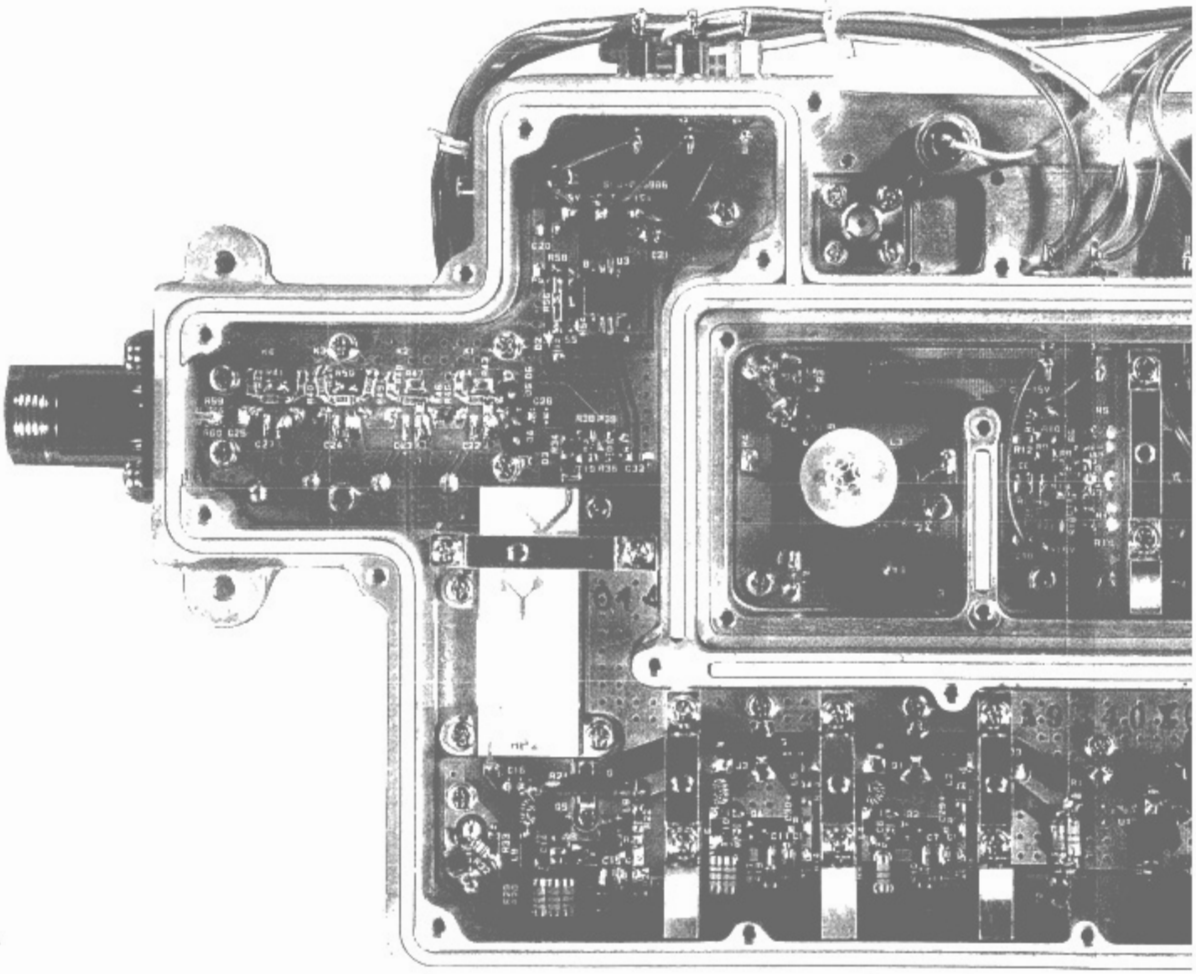

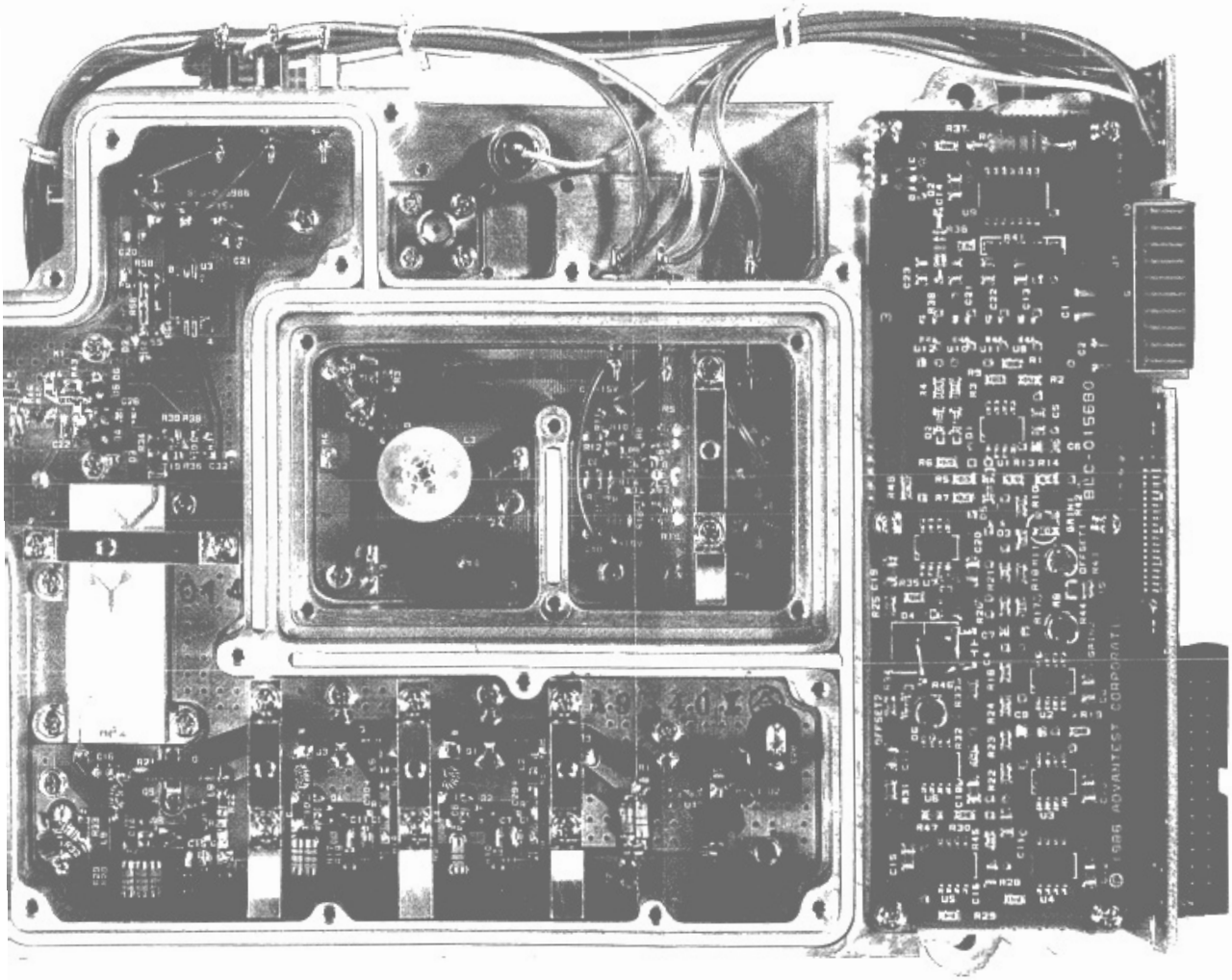

PARTS LOCATION
TG BLOCK 2
WBL-3361TG
BED-015986
BLC-015680
BTB-015676

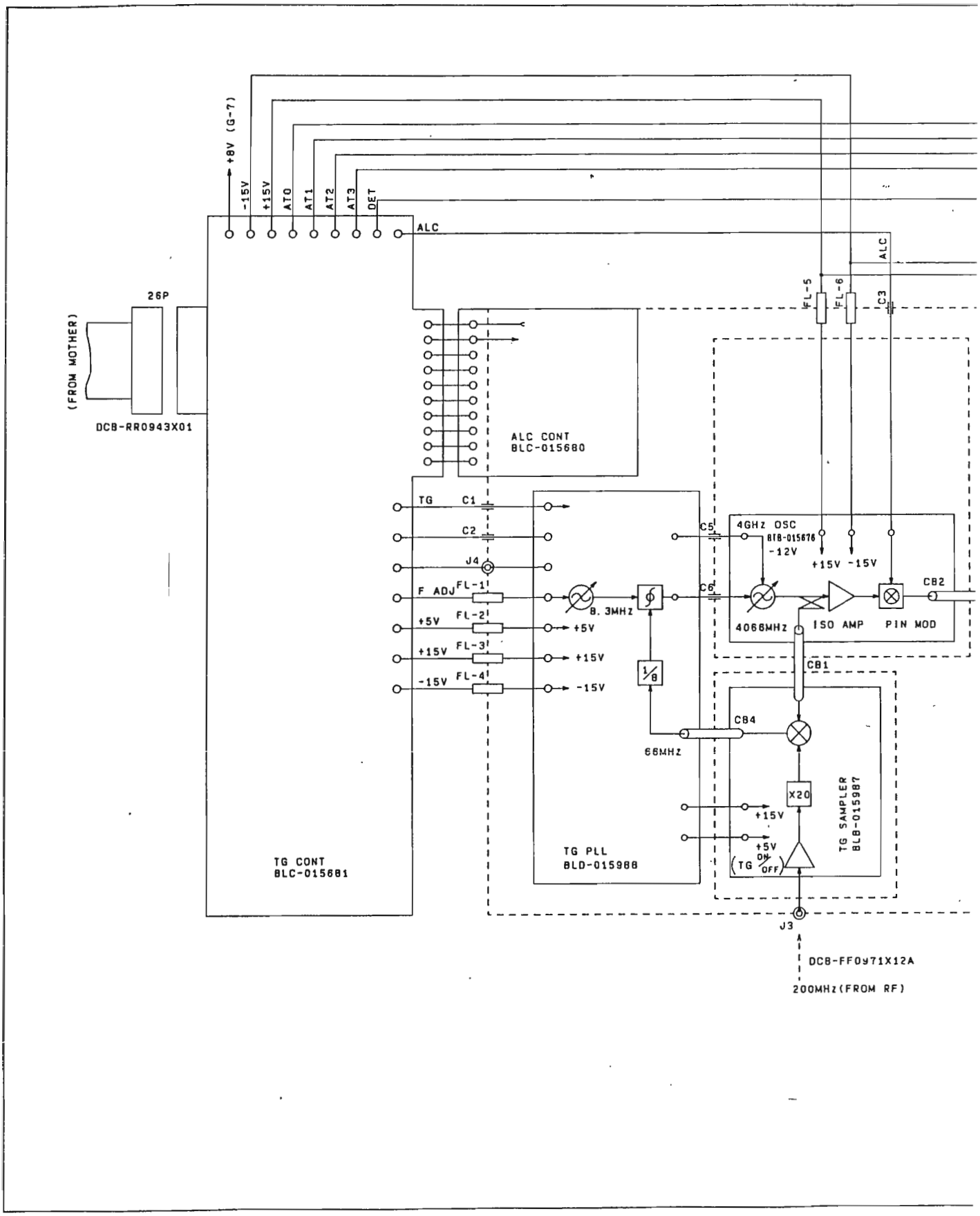
+8V (G-7)
-15V
+15V
AT0
AT1
AT2
AT3
DET
ALC
26P
(FROM MOTHER)
DCB-RR0943X01
ALC CONT
BLC-015680
TG
C1
C2
J4
F ADJ
FL-1
+5V
FL-2
+15V
FL-3
-15V
FL-4
8.3MHz
66MHz
1/8
TG PLL
BLD-015988
TG CONT
BLC-015681
C5
C6
4GHz OSC
BLB-015676
-12V
+15V -15V
4066MHz
ISO AMP
PIN MOD
CB2
CB1
CB4
X20
+15V
+5V
(TG ON/OFF)
TG SAMPLER
BLB-015987
FL-5
FL-6
C3
ALC
J3
DCB-FF0971X12A
200MHz(FROM RF)

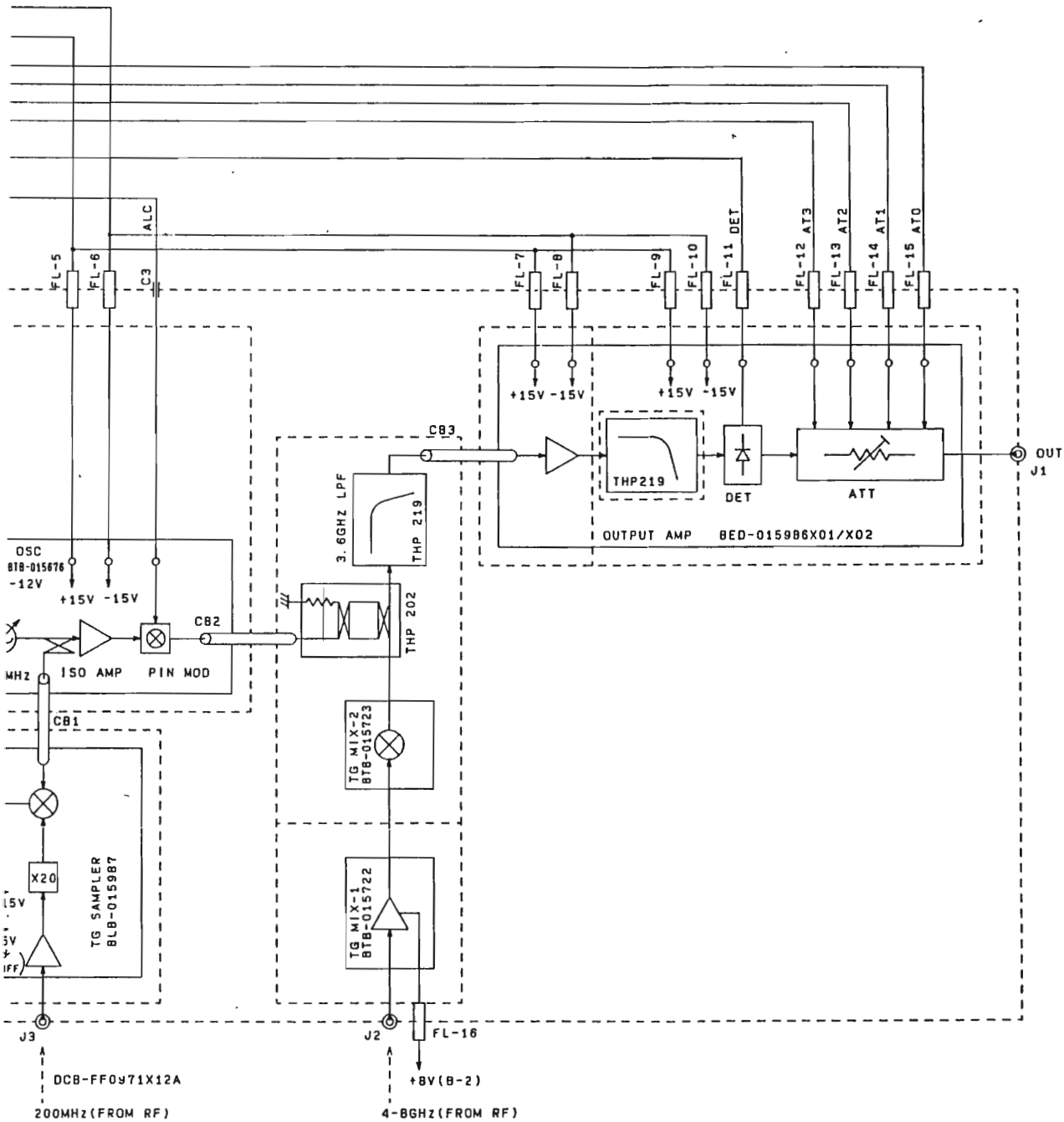

R3361 TG BLOCK
WBL-3361TG/3361ANTG

R3261/3361
OUTPUT AMP
BED-015986 (1/3)

Parts No.	Advantest Stock No.	Description					Note
C1	CCP-TA1U16V-1	FXD	CHIP	1μF	+80%, -20%	16V	
C2	CCP-BBR1U50V	FXD	CHIP	0.1μF	+80%, -20%	50V	
C3	CCP-AT3PR1K	FXD	CHIP	3PF	±0.5PF	100V	
C4	CCP-ADR47U50V	FXD	CHIP	0.47μF	+80%, -20%	50V	
C5	CCP-BAR01U50V	FXD	CHIP	0.01μF	±10%	50V	
C8	CCP-ADR47U50V	FXD	CHIP	0.47μF	+80%, -20%	50V	
C9	CCP-BAR01U50V	FXD	CHIP	0.01μF	±10%	50V	
C12	CCP-ADR47U50V	FXD	CHIP	0.47μF	+80%, -20%	50V	
C13	CCP-BAR01U50V	FXD	CHIP	0.01μF	±10%	50V	
C16	CCP-TA1U16V-1	FXD	CHIP	1μF	+80%, -20%	16V	
C18	CCP-TF1U50V	FXD	CHIP	1μF	+80%, -20%	50V	
C19	CCP-BAR01U50V	FXD	CHIP	0.01μF	±10%	50V	
C25	CCP-ADR47U50V	FXD	CHIP	0.47μF	+80%, -20%	50V	
C26	CCP-TA1U16V-1	FXD	CHIP	1μF	+80%, -20%	16V	
C27	CCP-BAR01U50V	FXD	CHIP	0.01μF	±10%	50V	
C28	CCP-TA1U16V-1	FXD	CHIP	1μF	+80%, -20%	16V	
C31	CTA-AZ6R8U16V	FXD	TA	6.8μF	±20%	16V	
C32	CCP-BAR01U50V	FXD	CHIP	0.01μF	±10%	50V	
C38	CCP-ADR47U50V	FXD	CHIP	0.47μF	+80%, -20%	50V	
D1	SDS-ND4141	Si SCHOTTKY BARRIER DIODE					
D2	SDS-1SS242	Si SCHOTTKY BARRIER DIODE					
D3	SDS-HSM2838CTR	Si DOUBLE DIODE					
K1	KPL-000350-2	RELAY SWITCH					
K4	KPL-000350-1	RELAY SWITCH					
L1	LCL-A00671	COIL		(CUSTOM DEVICE)			
L3	LCL-T00889	COIL		(CUSTOM DEVICE)			
L7	LCL-T00889	COIL		(CUSTOM DEVICE)			
L10	LCL-T00889	COIL		(CUSTOM DEVICE)			
L11	LCL-A00671	COIL		(CUSTOM DEVICE)			
Q1	SFN-2SK878	Al Ga As/Ga As N Channel HEMT					
Q2	STP-2SA1162	TRANSISTOR		PNP			
Q3	SFN-2SK571	N Channel Ga As MES-TYPE					
Q4	STP-2SA1162	TRANSISTOR		PNP			
Q5	SFN-900075	Ga As Power FET					
Q6	STP-2SA1162	TRANSISTOR		PNP			
R1	RAY-BRX0003	FXD		(CUSTOM DEVICE)			
R2	RMF-BL470QFJ	FXD	METAL	470Ω	±1%	1/4W	
R3	RCP-AJ180	FXD	CHIP	180Ω	±5%	1/10W	
R4	RAY-BRX0006	FXD		(CUSTOM DEVICE)			
R5	RCP-AJ1K	FXD	CHIP	1kΩ	±5%	1/10W	

R3261/3361
OUTPUT AMP
BED-015986 (2/3)

Parts No.	Advantest Stock No.	Description					Note
R6	RCP-AJ6R8K	FXD	CHIP	6.8kΩ	±5%	1/10W	
R7	RCP-AJ1R5K	FXD	CHIP	1.5kΩ	±5%	1/10W	
R8	RCP-AJ1K	FXD	CHIP	1kΩ	±5%	1/10W	
R9	RMF-BL470QFJ	FXD	METAL	470Ω	±1%	1/4W	
R10	RCP-AJ12K	FXD	CHIP	12kΩ	±5%	1/10W	
R11	RCP-AJ1R5K	FXD	CHIP	1.5kΩ	±5%	1/10W	
R12	RAY-BRX0006	FXD		(CUSTOM DEVICE)			
R13	RCP-AJ1K	FXD	CHIP	1kΩ	±5%	1/10W	
R14	RCP-AJ6R8K	FXD	CHIP	6.8kΩ	±5%	1/10W	
R15	RCP-AJ1R5K	FXD	CHIP	1.5kΩ	±5%	1/10W	
R16	RCP-AJ1K	FXD	CHIP	1kΩ	±5%	1/10W	
R17	RMF-BL820QFJ	FXD	METAL	820Ω	±1%	1/4W	
R19	RCP-AJ12K	FXD	CHIP	12kΩ	±5%	1/10W	
R20	RCP-AJ1R8K	FXD	CHIP	1.8kΩ	±5%	1/10W	
R21	RAY-BRX0003	FXD		(CUSTOM DEVICE)			
R22	RCP-AJ1K	FXD	CHIP	1kΩ	±5%	1/10W	
R23	RCP-AJ1R5K	FXD	CHIP	1.5kΩ	±5%	1/10W	
R24	RCP-AJ6R8K	FXD	CHIP	6.8kΩ	±5%	1/10W	
R25	RCP-AJ1K	FXD	CHIP	1kΩ	±5%	1/10W	
R26	RMF-BL470QFJ	FXD	METAL	470Ω	±1%	1/4W	
R30	RCP-AJ12K	FXD	CHIP	12kΩ	±5%	1/10W	
R31	RCP-AJ1R8K	FXD	CHIP	1.8kΩ	±5%	1/10W	
R32	RCB-AG1K	FXD	CHIP	1kΩ	±5%	1/6W	
R33	RCP-AH470	FXD	CHIP	470Ω	±5%	1/8W	
R34	RCP-AJ22	FXD	CHIP	22Ω	±5%	1/10W	
R36	RCP-AJ10K	FXD	CHIP	10kΩ	±5%	1/10W	
R37	RCP-AJ2R2K	FXD	CHIP	2.2kΩ	±5%	1/10W	
R38	RCP-AJ51	FXD	CHIP	51Ω	±5%	1/10W	
R39	RCP-AJ220	FXD	CHIP	220Ω	±5%	1/10W	
R40	RCP-AN180	FXD	CHIP	180Ω	±0.5%	1/10W	
R41	RCP-AN30	FXD	CHIP	30Ω	±0.5%	1/10W	
R42	RCP-AN180	FXD	CHIP	180Ω	±0.5%	1/10W	
R43	RCP-AN68	FXD	CHIP	68Ω	±0.5%	1/10W	
R44	RCP-AN130	FXD	CHIP	130Ω	±0.5%	1/10W	
R45	RCP-AN68	FXD	CHIP	68Ω	±0.5%	1/10W	
R46	RCP-AN68	FXD	CHIP	68Ω	±0.5%	1/10W	
R47	RCP-AN130	FXD	CHIP	130Ω	±0.5%	1/10W	
R48	RCP-AN68	FXD	CHIP	68Ω	±0.5%	1/10W	
R49	RCP-AM91	FXD	CHIP	91Ω	±1%	1/8W	
R50	RCP-AM68	FXD	CHIP	68Ω	±1%	1/8W	

R3261/3361
OUTPUT AMP
BED-015986 (3/3)

Parts No.	Advantest Stock No.	Description					Note
R51	RCP-AM91	FXD	CHIP	91Ω	±1%	1/8W	
R52	RAY-BRX0003	FXD		(CUSTOM DEVICE)			
R53	RMF-BL470QFJ	FXD	METAL	470Ω	±1%	1/4W	
R54	RCP-AJ2R2K	FXD	CHIP	2.2kΩ	±5%	1/10W	
R55	RCP-AJ10K	FXD	CHIP	10kΩ	±5%	1/10W	
R56	RCP-AN200K-1	FXD	CHIP	200kΩ	±0.5%	1/10W	
R57	RCP-AJ1K	FXD	CHIP	1kΩ	±5%	1/10W	
R58	RCP-AJ15K	FXD	CHIP	15kΩ	±5%	1/10W	
R61	RCP-AJ6R8K	FXD	CHIP	6.8kΩ	±5%	1/10W	
R65	RCB-AH1R5K-1	FXD	CAR	1.5kΩ	±5%	1/8W	
U1	SIA-MAR7	MONOLITHIC AMPLIFER 2GHz					
U3	SIA-OP07PS	OP AMP ULTRA-LOW OFFSET					

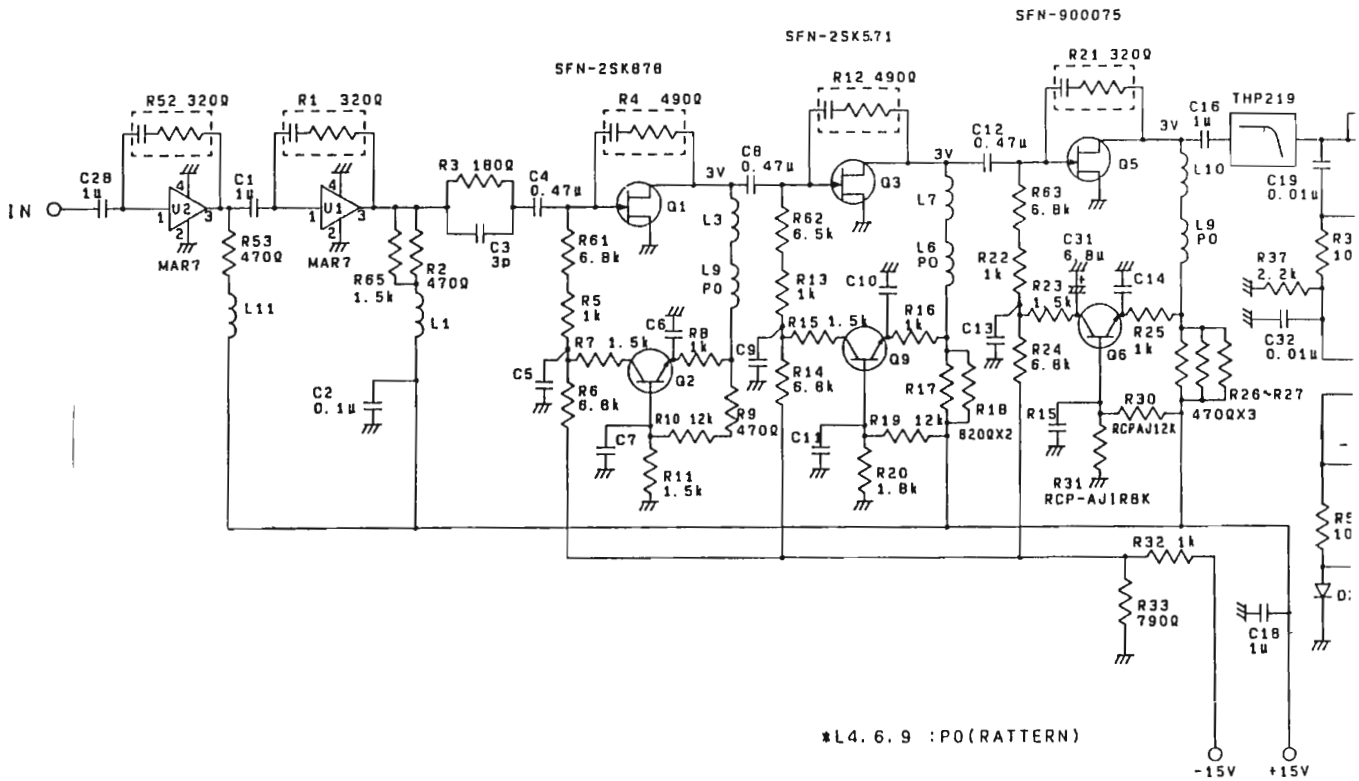

C 5~ 7 9~11 13~15 19~21	: CCP-ACR01U50V
U 1, 2 U 3	SIA-MAR7 SIA-OP07PS
U 2, 4, 6	STP-2SA1162
D 1 D 2	SDS-ND4141 SDS-1SS242
K 1~4	KRL-000350-2

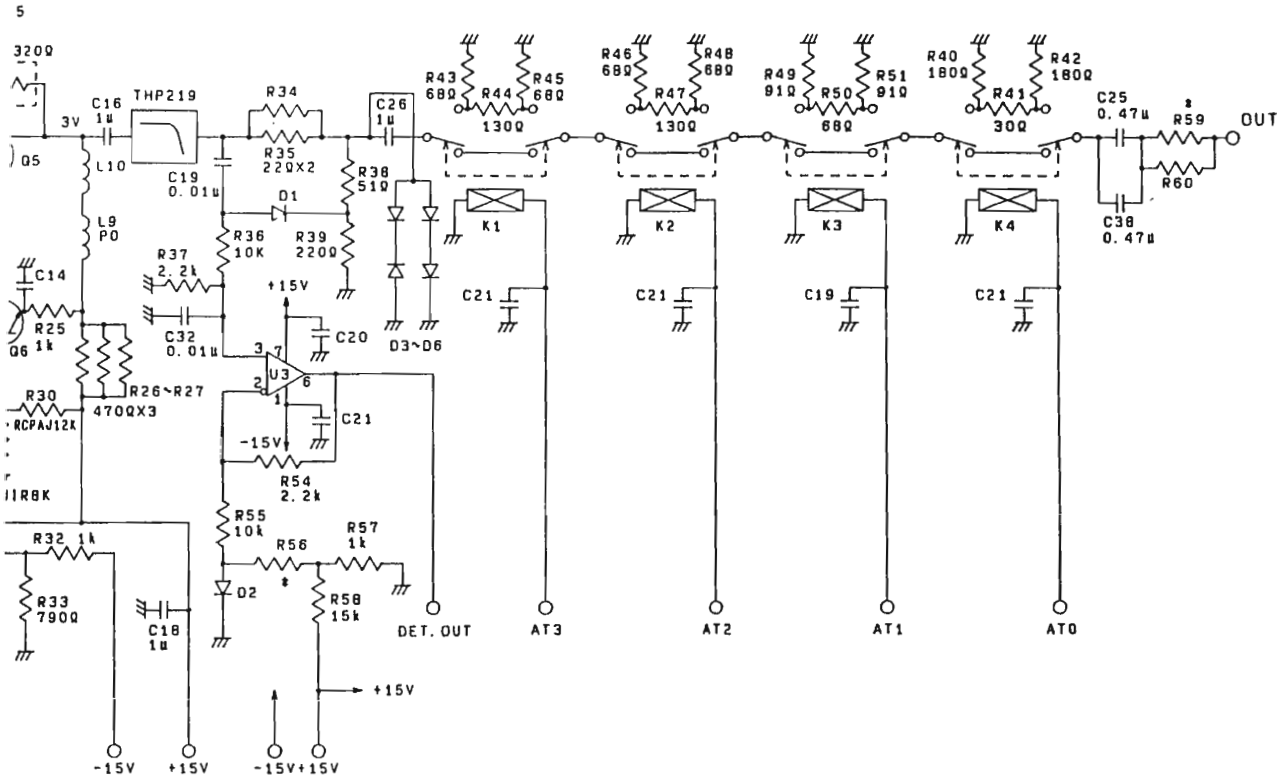

* R59, R60
ONLY :BED-015986X02

* R56
200k : X01
300k : X02

R3361 OUTPUT AMP
BED-015986

R3261/3361
TG SAMPLER
BLB-015987 (1/1)

Parts No.	Advantest Stock No.	Description					Note
C1	CCP-AT24PR1K	FXD	CHIP	24PF	±5%	100V	
C3	CCP-AT12PR1K	FXD	CHIP	12PF	±10%	100V	
C4	CCP-BA2200P50V	FXD	CHIP	2200PF	±20%	50V	
C6	CCP-BBR1U50V	FXD	CHIP	0.1μF	+80%, -20%	50V	
C8	CCP-BA2200P50V	FXD	CHIP	2200PF	±20%	50V	
C10	CCP-BA2P50V	FXD	CHIP	2PF	±0.25PF	50V	
C14	CCP-BBR1U50V	FXD	CHIP	0.1μF	+80%, -20%	50V	
C15	CCP-BA2P50V	FXD	CHIP	2PF	±0.25PF	50V	
C16	CCP-AT30PR1K	FXD	CHIP	30PF	±5%	100V	
C17	CCP-BA2P50V	FXD	CHIP	2PF	±0.25PF	50V	
C18	CCP-BA5P50V	FXD	CHIP	5PF	±0.5PF	50V	
D1	SDS-1SV107	Si SNAP-OFF DIODE					
D2	SDS-1SS242	Si SCHOTTKY BARRIER DIODE					
L1	LCL-E00936	COIL	CHIP	47nH	±20%		
L2	LCL-E00937	COIL	CHIP	65nH	±20%		
L3	LCL-E00936	COIL	CHIP	47nH	±20%		
L4	LCL-A00777	COIL		(CUSTOM DEVICE)			
Q1	STN-2SC3357	TRANSISTOR		NPN			
R1	RCP-AJ270	FXD	CHIP	270Ω	±5%	1/10W	
R2	RCP-AJ18	FXD	CHIP	18Ω	±5%	1/10W	
R3	RCP-AJ270	FXD	CHIP	270Ω	±5%	1/10W	
R4	RCP-AJ4R7K	FXD	CHIP	4.7kΩ	±5%	1/10W	
R6	RCB-AQ220	FXD	CAR	220Ω	±5%	1/4W	
R10	RCP-AJ1K	FXD	CHIP	1kΩ	±5%	1/10W	
R12	RCP-AJ100K	FXD	CHIP	100kΩ	±5%	1/10W	
R14	RCP-AJ270	FXD	CHIP	270Ω	±5%	1/10W	
R15	RCP-AJ18	FXD	CHIP	18Ω	±5%	1/10W	
R16	RCP-AJ270	FXD	CHIP	270Ω	±5%	1/10W	
U1	SIA-1675	Bipolar Analog IC 1GHz Amp					

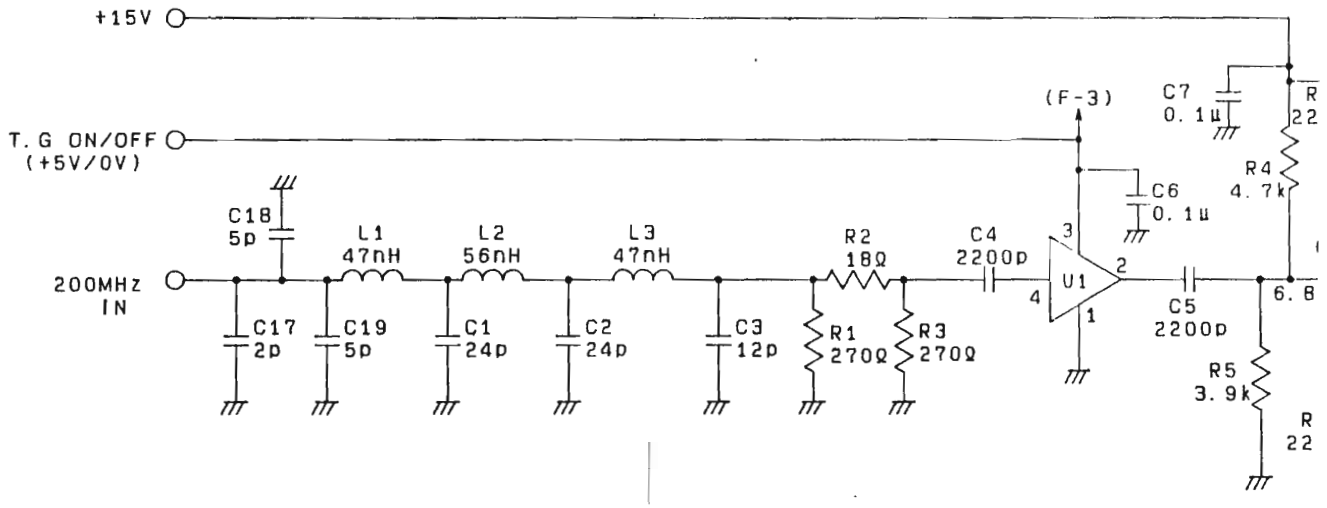

U 1	SIA-1675
Q 1	STN-2SC3357
D 1 D 2.3	SDS-1SV107 SDS-1SS242

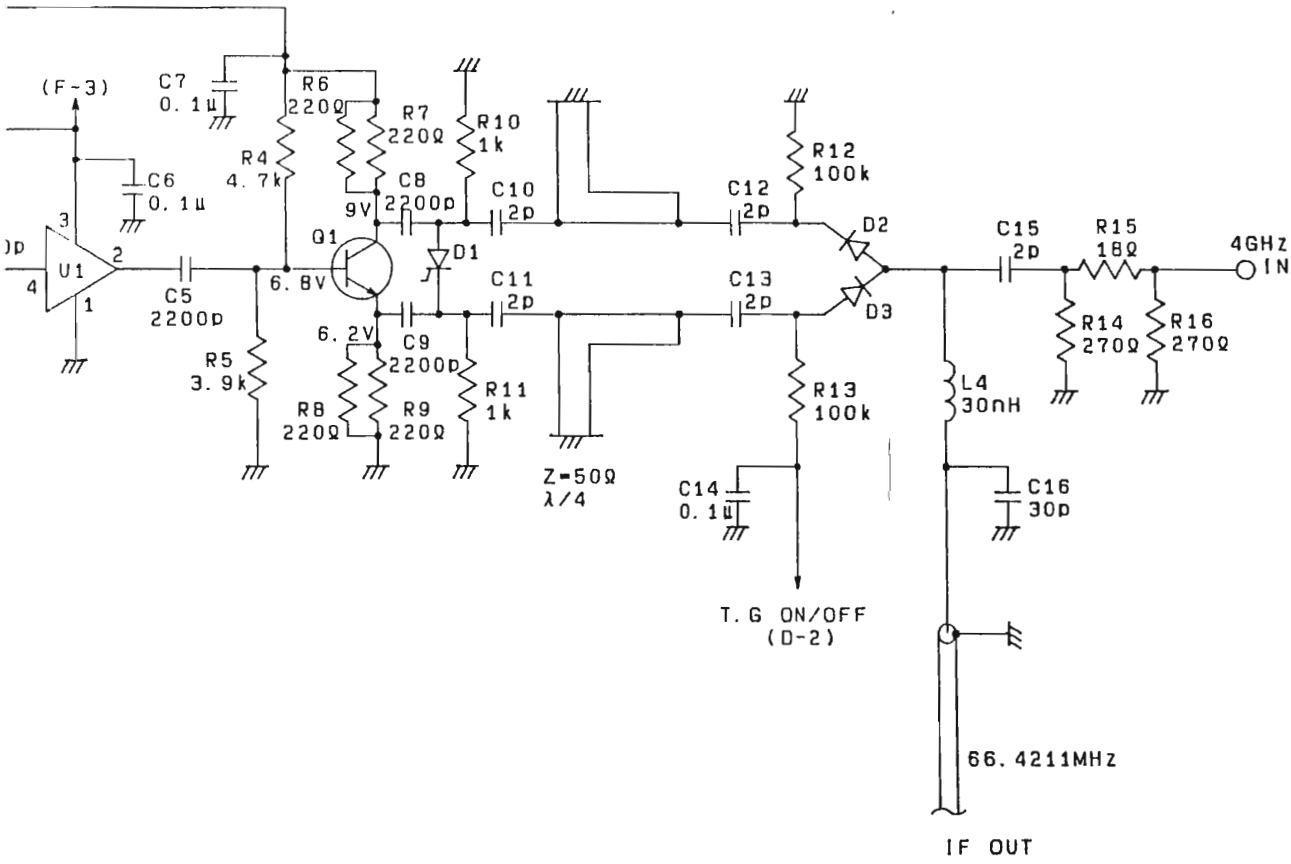

R3361 TG SAMPLER
BLB-015987

R3261/3361
ALC CONT
BLQ-015680 (1/2)

Parts No.	Advantest Stock No.	Description					Note
C1-2	CCP-AE1U50V	FXD	CHIP	1μF	+80%,-20%	50V	
C3	CFM-AS3300P50V	FXD	FILM	3300PF	±10%	50V	
C4	CFM-ASR047U50V	FXD	FILM	0.047μF	±10%	50V	
C5-20	CCP-BBR1U50V	FXD	CHIP	0.1μF	+80%,-20%	50V	
C21-23	CCP-BBR1U50V	FXD	CHIP	0.1μF	+80%,-20%	50V	
D1	SDS-LS955	DIODE SI					
D2	SDS-LS955	DIODE SI					
D3	SDZ-MO51	ZENER	DIODE				
D4-5	SDS-LS955	DIODE SI					
D6	SDS-LS955	DIODE SI					
J1	JCP-AR010JX02	CONNECTOR					
Q2	STP-2SA1204	TRANSISTOR	PNP				
R1	RCP-AN10K	FXD	CHIP	10KΩ	±5%	1/10W	
R2	RCP-AN4R7K	FXD	CHIP	4.7KΩ	±5%	1/10W	
R3	RCP-AN56K	FXD	CHIP	50KΩ	±5%	1/10W	
R4	RCP-AN36K	FXD	CHIP	36KΩ	±5%	1/10W	
R5	RCP-AN1K	FXD	CHIP	1KΩ	±5%	1/10W	
R6	RCP-AN1R5K	FXD	CHIP	1.5KΩ	±5%	1/10W	
R7	RCP-AN6R2K	FXD	CHIP	6.2KΩ	±5%	1/10W	
R8	RCP-AH1R5K	FXD	CHIP	1.5KΩ	±5%	1/10W	
R9	RCP-AN100K	FXD	CHIP	100KΩ	±5%	1/10W	
R10	RCP-AN10K	FXD	CHIP	10KΩ	±5%	1/10W	
R11	RCP-AN36K	FXD	CHIP	36KΩ	±5%	1/10W	
R13-14	RCP-AN1K	FXD	CHIP	1KΩ	±5%	1/10W	
R15-16	RCP-AN10K	FXD	CHIP	10KΩ	±5%	1/10W	
R17	RCP-AN51K	FXD	CHIP	51KΩ	±5%	1/10W	
R18	RCP-AN10K	FXD	CHIP	10KΩ	±5%	1/10W	
R19	RCP-AN10K	FXD	CHIP	10KΩ	±5%	1/10W	
R20	RCP-AN22K	FXD	CHIP	22KΩ	±5%	1/10W	
R21	RCP-AN6R2K	FXD	CHIP	6.2KΩ	±5%	1/10W	
R22-23	RCP-AN10K	FXD	CHIP	10KΩ	±5%	1/10W	
R24	RCP-AN3R6K	FXD	CHIP	3.6KΩ	±5%	1/10W	
R25	RCP-AN22K	FXD	CHIP	22KΩ	±5%	1/10W	
R28-29	RCP-AN2R2K	FXD	CHIP	2.2KΩ	±5%	1/10W	
R30-31	RCP-AN10K	FXD	CHIP	10KΩ	±5%	1/10W	
R32	RCP-AN4R7K	FXD	CHIP	4.7KΩ	±5%	1/10W	
R33	RCP-AN2R2K	FXD	CHIP	2.2KΩ	±5%	1/10W	
R34	RCP-AN3R3K	FXD	CHIP	3.3KΩ	±5%	1/10W	
R35	RCP-AN10K	FXD	CHIP	10KΩ	±5%	1/10W	
R36	RCP-AN100	FXD	CHIP	100Ω	±5%	1/10W	
R37	RCP-AN10K	FXD	CHIP	10KΩ	±5%	1/10W	
R38	RCB-AH10K	FXD	CAR	10KΩ	±5%	1/4W	
R40	RCB-AK120	FXD	CAR	120Ω	±5%	1/2W	
R41	RAY-AL10K4	FXD	RA	10KΩ×4	±5%	1/8W	
R42	RCP-AN10K	FXD	CHIP	10KΩ	±5%	1/10W	
R43	RVR-DF10K	VAR		10KΩ	±20%	1/2W	
R44	RVR-DF20K	VAR		20KΩ	±20%	1/2W	
R45	RCP-AN2R2K	FXD	CHIP	2.2KΩ	±5%	1/10W	
R46	RVR-DF1K	VAR		1KΩ	±20%	1/2W	
R47	RCP-AN22K	FXD	CHIP	22KΩ	±5%	1/10W	
R48	RCP-AN5R6K	FXD	CHIP	5.6KΩ	±5%	1/10W	

R3261/3361
ALC CONT
BLQ-015680 (2/2)

Part No.	Advantest Stock No.	Description	Note
U1-3	SIA-TL072CPS	OP AMP DUAL LOW NOISE	
U4-5	SIA-OP07PS	OP AMP LOW OFFSET	
U6	SIA-OP07PS	OP AMP LOW OFFSET	
U7	SIA-TL072CPS	OP AMP DUAL LOW NOISE	
U8	SIA-TC4S66F	ANALOG SWITCHES	
U9	SIT-7407S	HEX BUFFER (OPEN COLLECTOR)	
U10-12	SIA-TC4S66F	ANALOG SWITCHES	

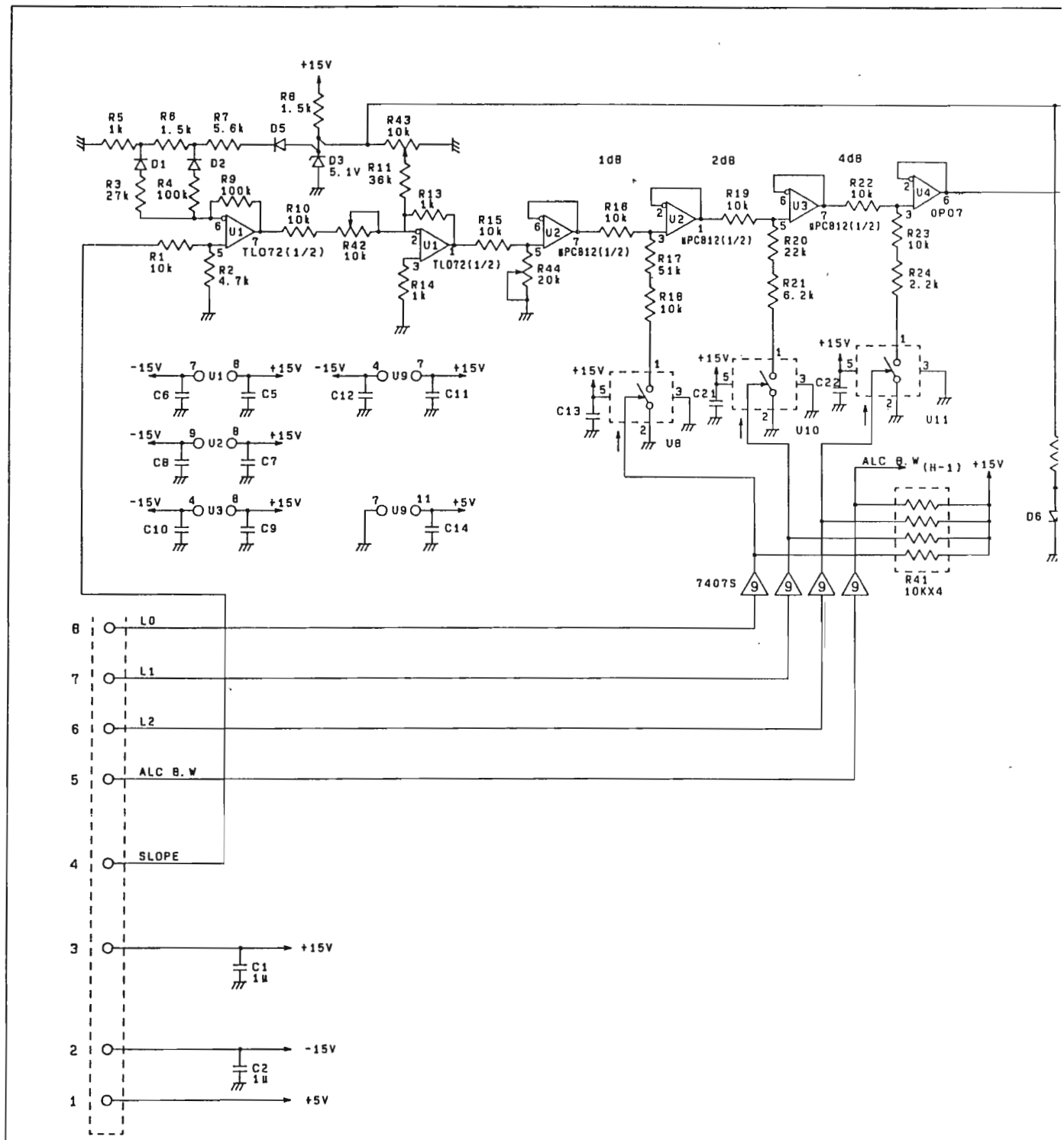

C 5~23	CCP-BBR1U50V
U 9	SIT-7407S
D 3	SDS-M051

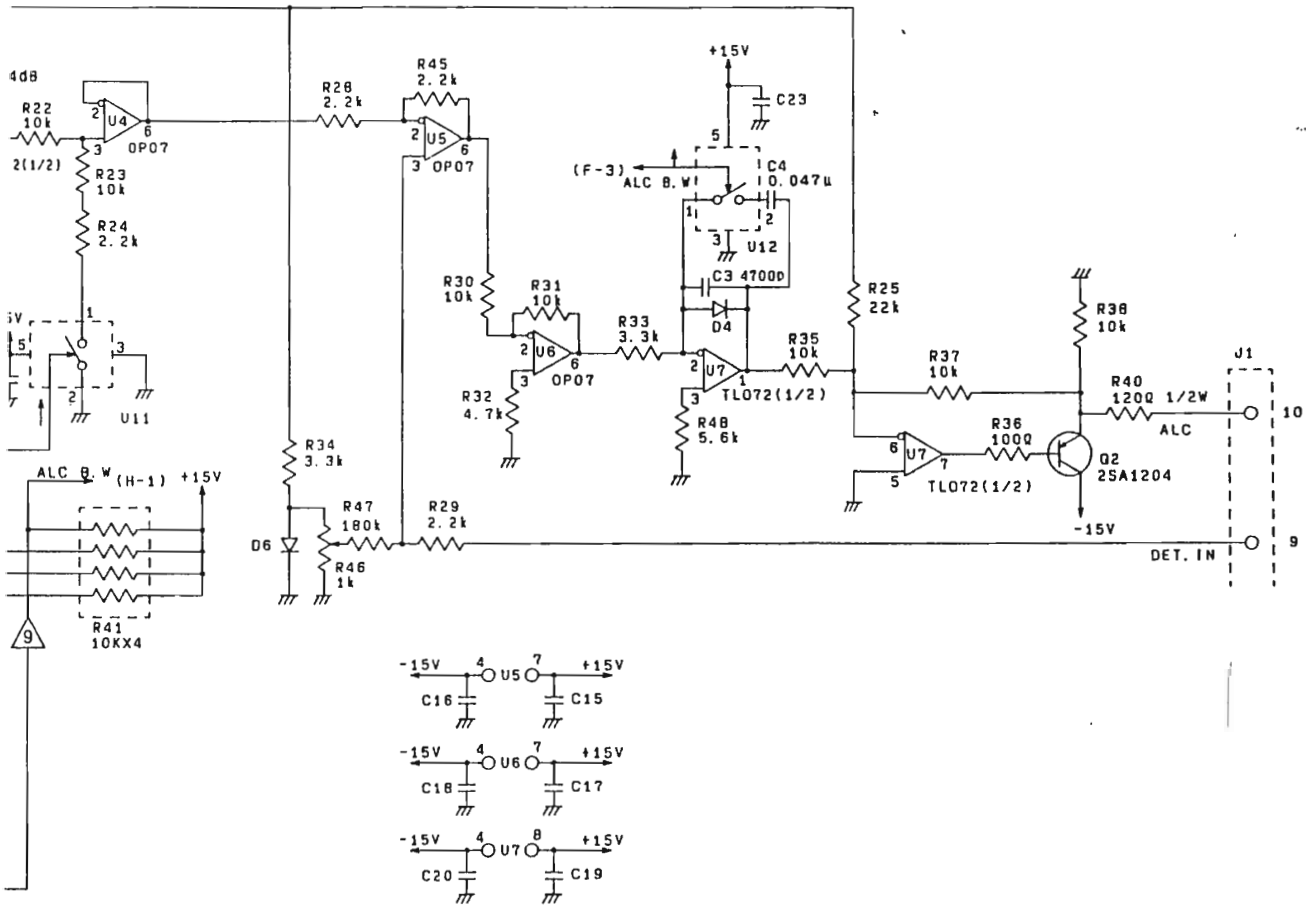

R3361 ALC CONT.
BLC-015680

R3261/3361
T.G CONT.
BLC-015681 (1/1)

Parts No.	Advantest Stock No.	Description					Note
C1	CCK-BX100U16V	FXD	ELECT	100μF	±20%	16V	
C2	CCK-BX22U25V	FXD	ELECT	22μF	±20%	25V	
C5	CCP-BBR1U50V	FXD	CHIP	0.1μF	+80%, -20%	50V	
C9	CCP-AT12PR1K	FXD	CHIP	12PF	±10%	100V	
C10	CCP-BBR1U50V	FXD	CHIP	0.1μF	+80%, -20%	50V	
D1	SDS-LS955	ULTRA-HIGH SPEED SWITCHING DIODE					
D5	SDZ-S030	ZENER DIODE					
J1	JCR-AF026PX02	CONNECTOR					
J2	JCP-AR010PX01	CONNECTOR					
L1	LCL-T00084A	COIL		(CUSTOM DEVICE)			
R1	RCP-AN12K	FXD	CHIP	12kΩ	±0.5%	1/10W	
R2	RCP-AN1R8K	FXD	CHIP	1.8kΩ	±0.5%	1/10W	
R3	RCP-AN22K	FXD	CHIP	22kΩ	±0.5%	1/10W	
R4	RCP-AN5R1K	FXD	CHIP	5.1kΩ	±0.5%	1/10W	
U1	SIM-CXD1095	I/O EXPANDER					
U2	SIA-DA7542	8-BIT D/A CONVERTER					
U3	SIA-TL072CPS	OP AMP DUAL LOW NOISE					
U4	SIT-DN8650	LOW ACTIVE DRIVERS					

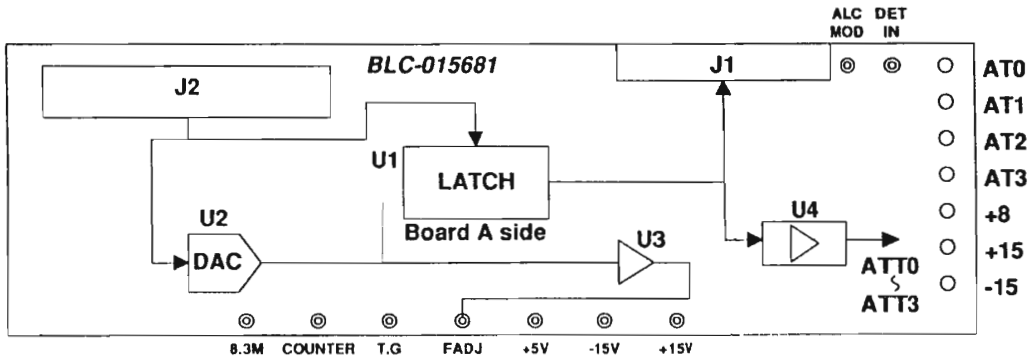

CIRCUIT LAYOUT
T.G CONT.
BLC-015681

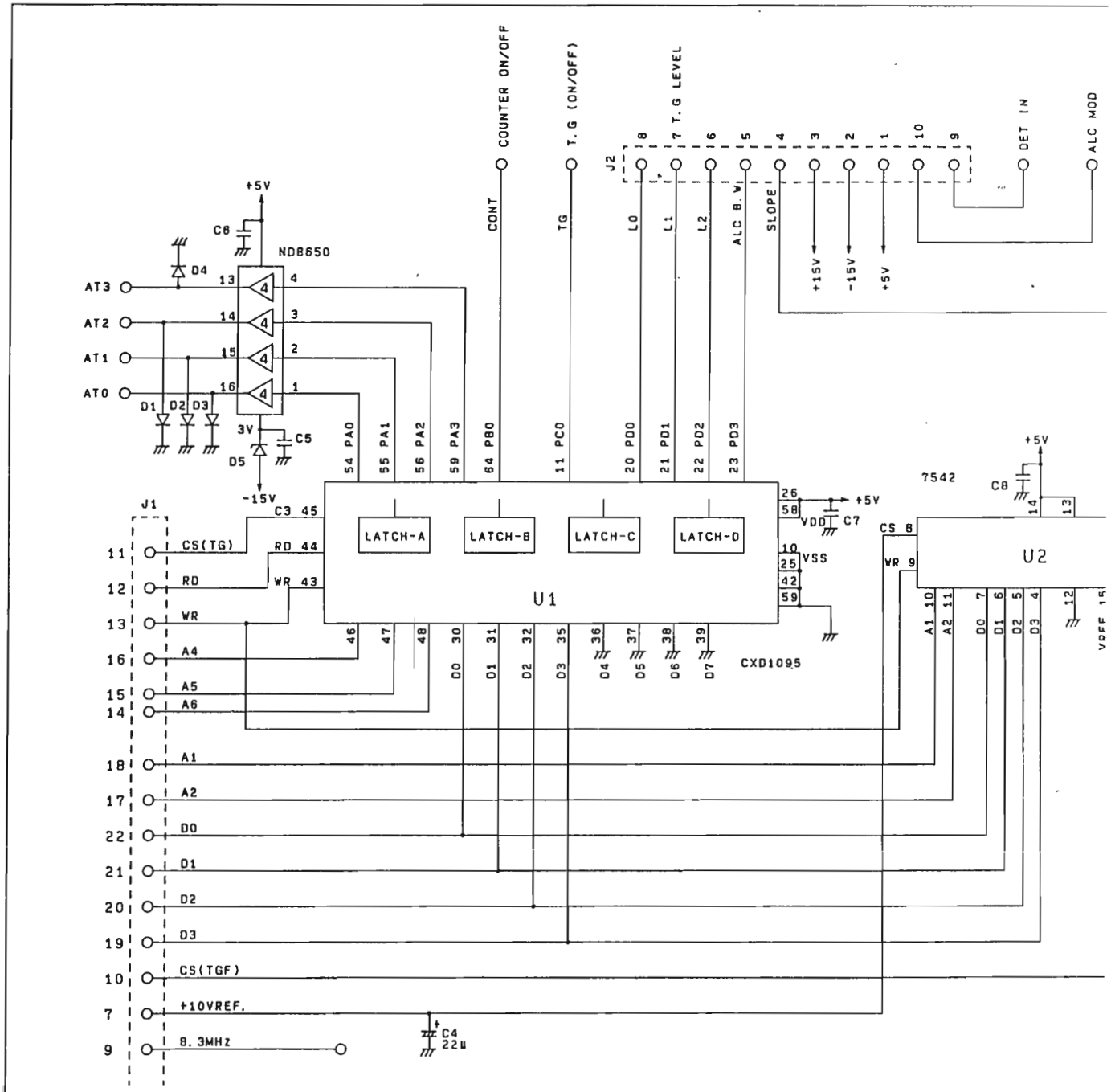

U 1 U 2	SIM-CXD1095 SIA-DA7542
U 3 U 4	SIA-TL072CPS SIT-DN8650

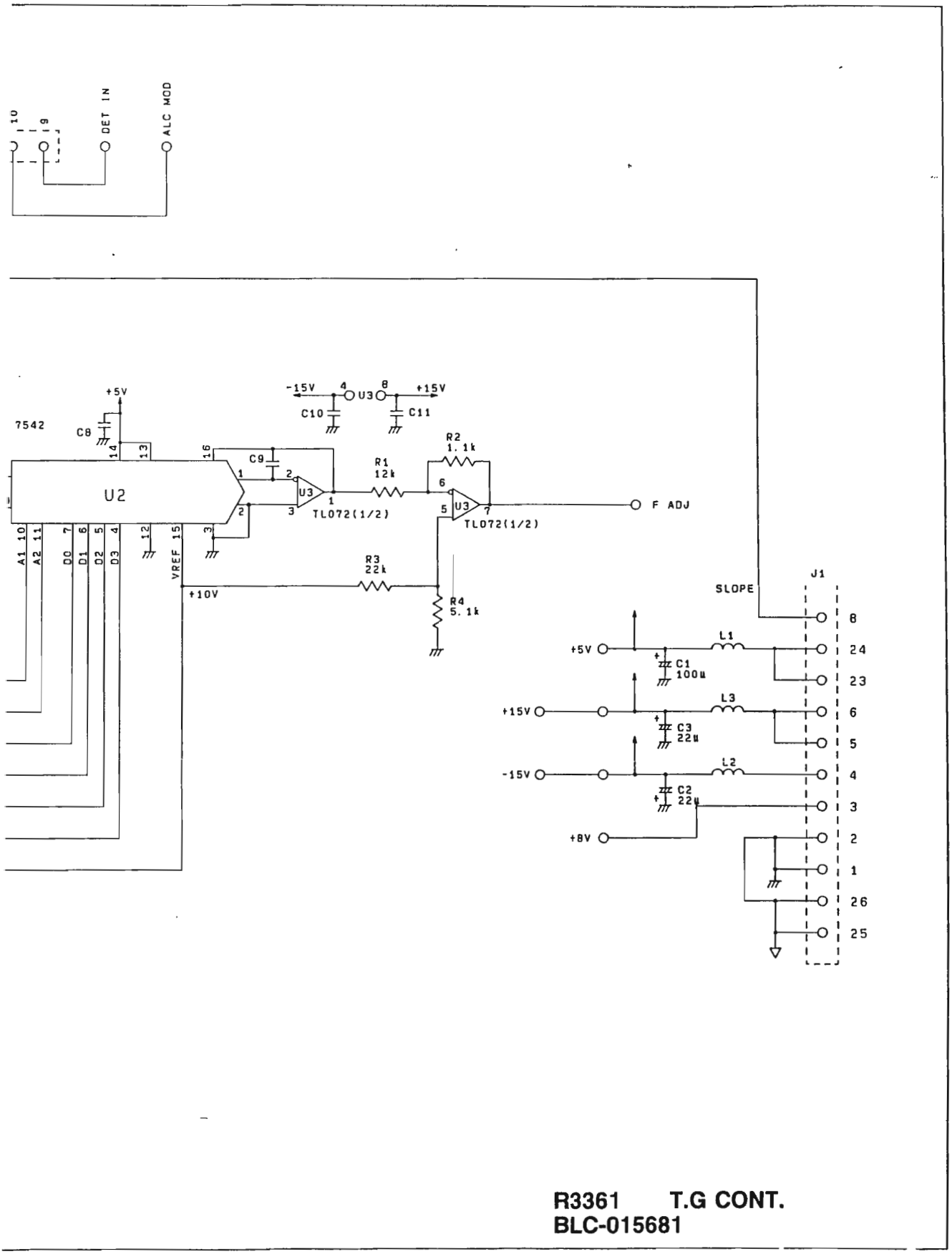

R3361 T.G CONT.
BLC-015681

R3261/3361
TG PLL
BLD-015988 (1/2)

Parts No.	Advantest Stock No.	Description					Note
C1	CCP-BA2200P50V	FXD	CHIP	2200PF	±20%	50V	
C3	CCP-BA68P50V	FXD	CHIP	68PF	±5%	50V	
C5	CCP-BBR1U50V	FXD	CHIP	0.1μF	+80%, -20%	50V	
C6	CCP-BA2200P50V	FXD	CHIP	2200PF	±20%	50V	
C9	CCP-BA22P50V	FXD	CHIP	22PF	±10%	50V	
C10	CCP-BA2200P50V	FXD	CHIP	2200PF	±20%	50V	
C11	CCP-BA68P50V	FXD	CHIP	68PF	±5%	50V	
C13	CCP-BA2200P50V	FXD	CHIP	2200PF	±20%	50V	
C14	CCP-BBR1U50V	FXD	CHIP	0.1μF	+80%, -20%	50V	
C15	CCP-ADR022U50V	FXD	CHIP	0.022μF	+80%, -20%	50V	
C16	CCP-BBR1U50V	FXD	CHIP	0.1μF	+80%, -20%	50V	
C17	CCP-ADR022U50V	FXD	CHIP	0.022μF	+80%, -20%	50V	
C18	CCP-BBR1U50V	FXD	CHIP	0.1μF	+80%, -20%	50V	
C21	CFM-AS2200P50V	FXD	FILM	2200PF	±10%	50V	
C22	CFM-ANR1U50V	FXD	FILM	0.1μF	±5%	50V	
C23	CCP-BBR1U50V	FXD	CHIP	0.1μF	+80%, -20%	50V	
C25	CCP-TF1U50V	FXD	CHIP	1μF	+80%, -20%	50V	
C26	CCK-BX100U10V	FXD	ELECT	100μF	±20%	10V	
C27	CCK-BX22U25V	FXD	ELECT	22μF	±20%	25V	
C29	CCP-BBR1U50V	FXD	CHIP	0.1μF	+80%, -20%	50V	
C31	CCP-BA18P50V	FXD	CHIP	18PF	±10%	50V	
C32	CSM-TG1U50V	FXD	CER	1μF	+80%, -20%	50V	
D1	SDZ-M130	ZENER DIODE					
J1	JCP-CJ003PX01	CONNECTOR					
J2	JCP-CJ002JX01	CONNECTOR					
L1	LCL-E00952	COIL	CHIP	1μH	±20%		
L2	LCL-E00941	COIL	CHIP	120nH	±10%		
L3	LCL-E00943	COIL	CHIP	180nH	±10%		
L4	LCL-E00941	COIL	CHIP	120nH	±10%		
L6	LCL-E00943	COIL	CHIP	180nH	±10%		
L7	LCL-E00941	COIL	CHIP	120nH	±10%		
L8	LCL-T00084A	COIL		(CUSTOM DEVICE)			
L9	LCL-C00010	COIL	CHIP	180μH	±10%		
Q1	STN-2SC1623	TRANSISTOR		NPN			
Q3	STP-2SA1204	TRANSISTOR		PNP			
Q4	STN-RN1404	TRANSISTOR		NPN			
Q5	STP-2SA1204	TRANSISTOR		PNP			
Q7	STN-RN2401	TRANSISTOR		NPN			
R1	RCP-AH82	FXD	CHIP	82Ω	±5%	1/8W	
R2	RCP-AJ51	FXD	CHIP	51Ω	±5%	1/10W	

R3261/3361
TG PLL
BLD-015988 (2/2)

Parts No.	Advantest Stock No.	Description					Note
R3	RCP-AJ1K	FXD	CHIP	1kΩ	±5%	1/10W	
R4	RCP-AH470	FXD	CHIP	470Ω	±5%	1/8W	
R5	RCB-AK1K	FXD	CAR	1kΩ	±5%	1/2W	
R6	RCP-AJ1K	FXD	CHIP	1kΩ	±5%	1/10W	
R9	RCP-AH470	FXD	CHIP	470Ω	±5%	1/8W	
R10	RCP-AJ1R8K	FXD	CHIP	1.8kΩ	±5%	1/10W	
R11	RCP-AJ10K	FXD	CHIP	10kΩ	±5%	1/10W	
R12	RCP-AJ4R7K	FXD	CHIP	4.7kΩ	±5%	1/10W	
R15	RCP-AJ1K	FXD	CHIP	1kΩ	±5%	1/10W	
U1	SIA-MAR6	MONOLITHIC AMPLIFER 2GHz					
U2	SIA-1675	Bipolar Analog IC 1GHz Amp					
U5	SIC-555	LOW POWER 2-MODULUS PRESCALER					
U6	SIA-OP07P	OP AMP ULTRA-LOW OFFSET					
U7	SHB-001510	CUSTOM DEVICE					
U8	SIM-74HC00	QUAD 2 INPUT POSI-NAND					
X1	DXC-001669	CRYSTAL					

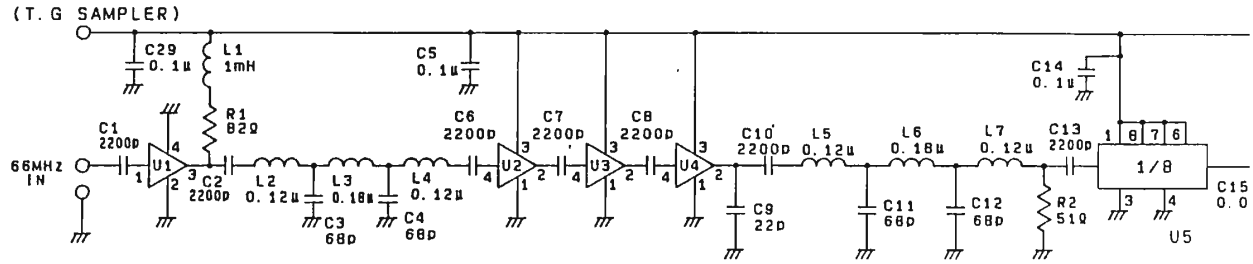

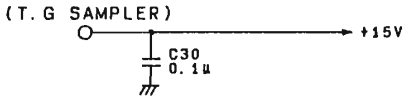

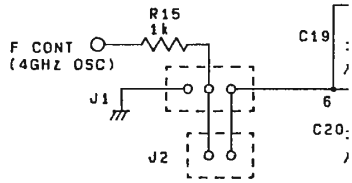

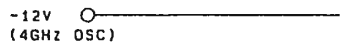

U 1 U 2~4	SIA-MAK6 SIA-1675
U 5 U 6	SIC-555 SIA-OP07P
U 7 U 8	SHB-001510 SIM-74HC00
X01	DXC-001669

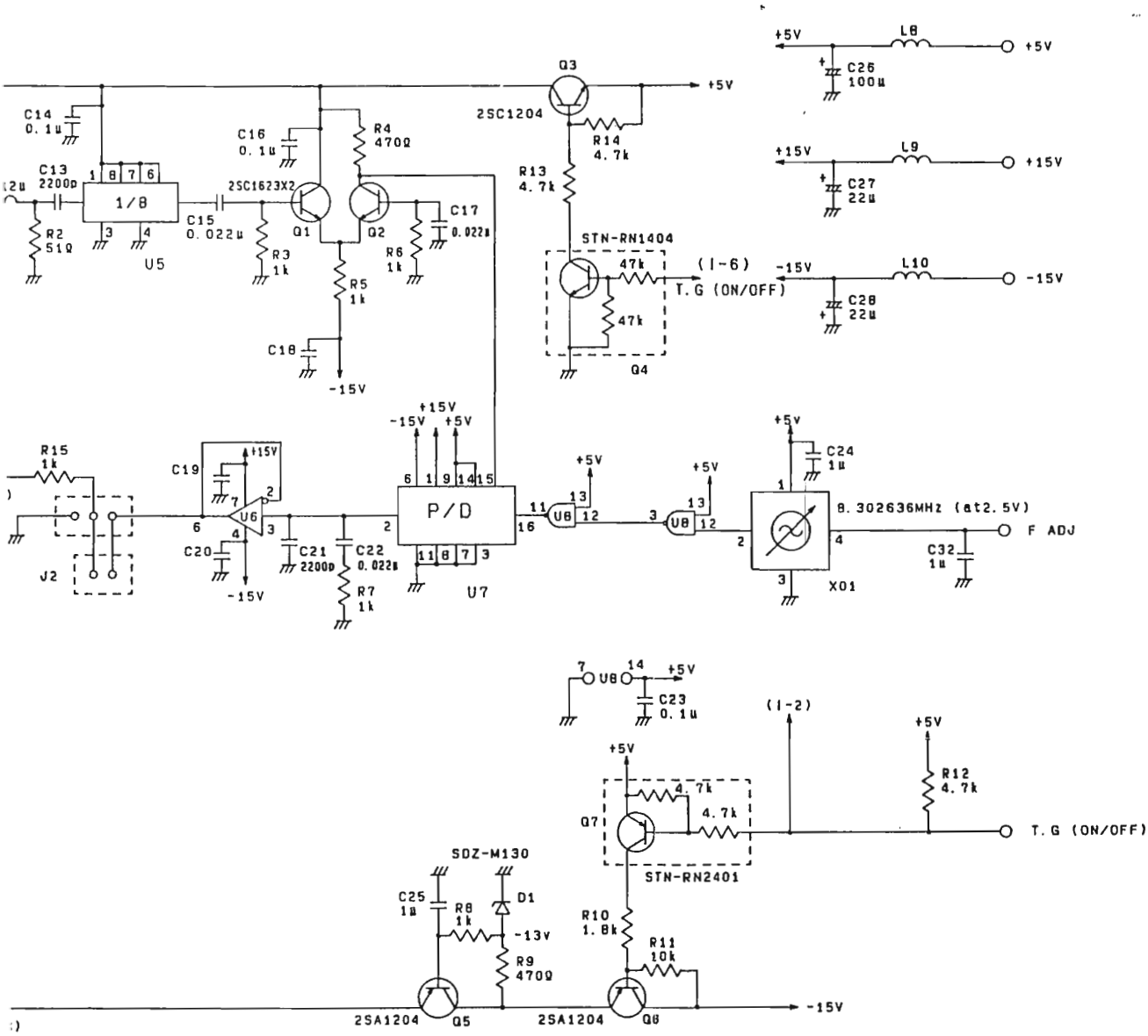

R3361 TG PLL
BLD-015988

R3261/3361
4GHZ OSC
BTB-015676 (1/1)

Parts No.	Advantest Stock No.	Description					Note
C1	CCP-BAR01U50V	FXD	CHIP	0.01μF	±10%	50V	
C3	CCP-BA4700P50V	FXD	CHIP	4700PF	±10%	50V	
C4	CCP-AT7PR1K	FXD	CHIP	7PF	±0.5PF	100V	
C5	CCP-BA10P50V	FXD	CHIP	10PF	±0.5PF	50V	
C6	CCP-BAR01U50V	FXD	CHIP	0.01μF	±10%	50V	
C11	CCP-BA10P50V	FXD	CHIP	10PF	±0.5PF	50V	
C12	CCP-BA10P50V	FXD	CHIP	10PF	±0.5PF	50V	
C13	CCP-BAR01U50V	FXD	CHIP	0.01μF	±10%	50V	
D1	SDS-1SS101	Si SCHOTTKY BARRIER DIODE					
D2	SDS-1SV34	Si PIN DIODE					
DR1	DXD-001691	DR	4GHz				
L2	LCL-A00773	COIL		(CUSTOM DEVICE)			
L3	LCL-A00772	COIL		(CUSTOM DEVICE)			
L4	LCL-A00671	COIL		(CUSTOM DEVICE)			
Q1	STN-2SC4095	TRANSISTOR		PNP			
Q2	SFN-2SK878	Al Ga As/Ga As		N Channel HEMT			
Q3	STP-2SA1162	TRANSISTOR		PNP			
R1	RCP-AJ1K	FIX	CHIP	1kΩ	±5%	1/10W	
R3	RCP-AJ1K	FIX	CHIP	1kΩ	±5%	1/10W	
R4	RCB-AH470	FIX	CHIP	470Ω	±5%	1/8W	
R5	RCP-AJ270	FIX	CHIP	270Ω	±5%	1/10W	
R6	RCP-AJ18	FIX	CHIP	18Ω	±5%	1/10W	
R7	RCP-AJ270	FIX	CHIP	270Ω	±5%	1/10W	
R8	RCP-AJ1K	FIX	CHIP	1kΩ	±5%	1/10W	
R9	RCP-AJ1R5K	FIX	CHIP	1.5kΩ	±5%	1/10W	
R10	RCP-AJ6R8K	FIX	CHIP	6.8kΩ	±5%	1/10W	
R11	RCP-AJ3R9K	FIX	CHIP	3.9kΩ	±5%	1/10W	
R12	RCP-AJ1K	FIX	CHIP	1kΩ	±5%	1/10W	
R13	RCP-AJ1R5K	FIX	CHIP	1.5kΩ	±5%	1/10W	
R14	RCP-AJ12K	FIX	CHIP	12kΩ	±5%	1/10W	
R15	RCP-AJ1K	FIX	CHIP	1kΩ	±5%	1/10W	
R16	RCB-AQ820	FIX	CAR	820Ω	±5%	1/4W	
R17	RCP-AJ270	FIX	CHIP	270Ω	±5%	1/10W	
R18	RCP-AJ18	FIX	CHIP	18Ω	±5%	1/10W	
R19	RCP-AJ270	FIX	CHIP	270Ω	±5%	1/10W	
R20	RCB-AQ330	FIX	CAR	330Ω	±5%	1/4W	

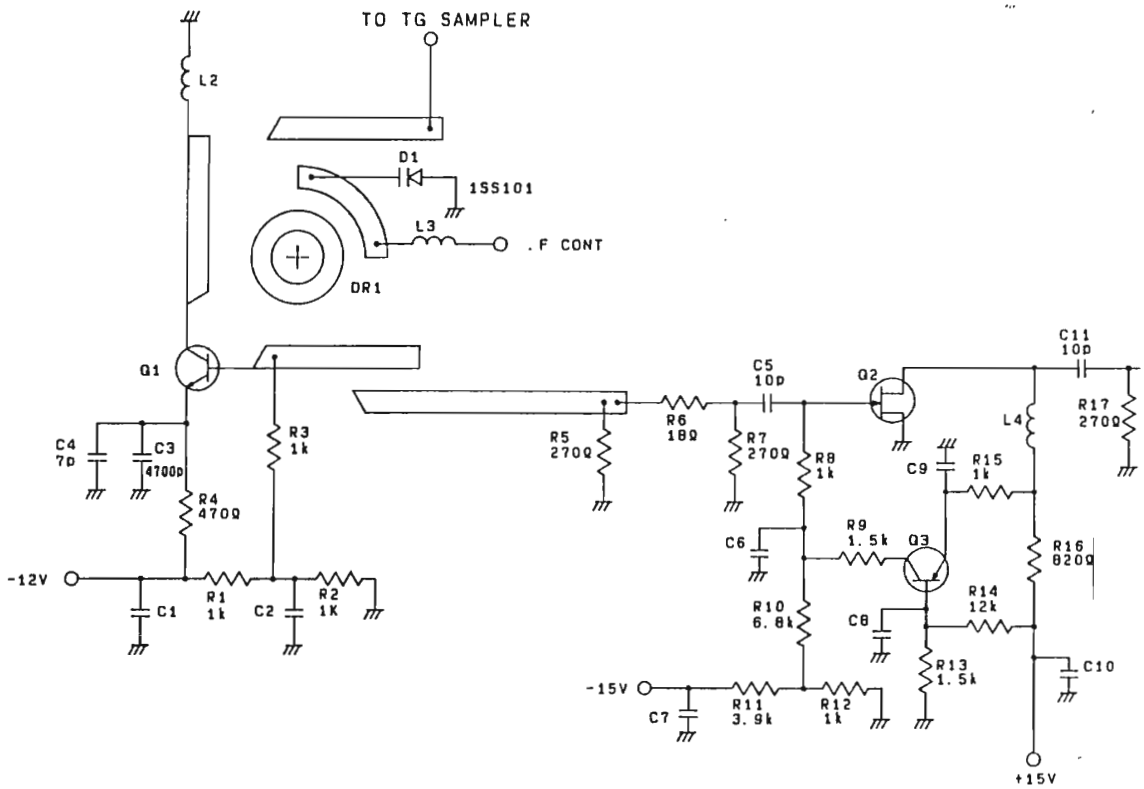

DR1	DXD-001691
C 1, 2 6~10 13	CCP-ACR01U50V
Q 1 Q 2	STN-2SC4095 SFN-2SK878
Q 3	STP-2SA1162
D 1 D 2~5	SDS-1SS101 SDS-1SV34

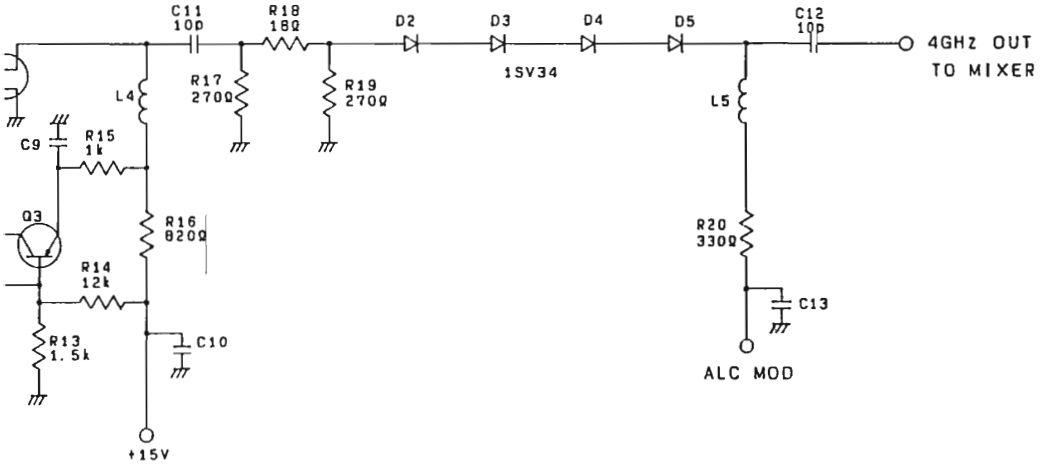

R3361 4GHz OSC
BTB-015676

R3261/3361
TG MIX-1
BTB-015722 (1/1)

Parts No.	Advantest Stock No.	Description	Note
C1	CCP-BBR1U50V	FXD CHIP 0.1μF +80%, -20% 50V	
U1	SIA-S9706*14	Ga As MMIC AMP	

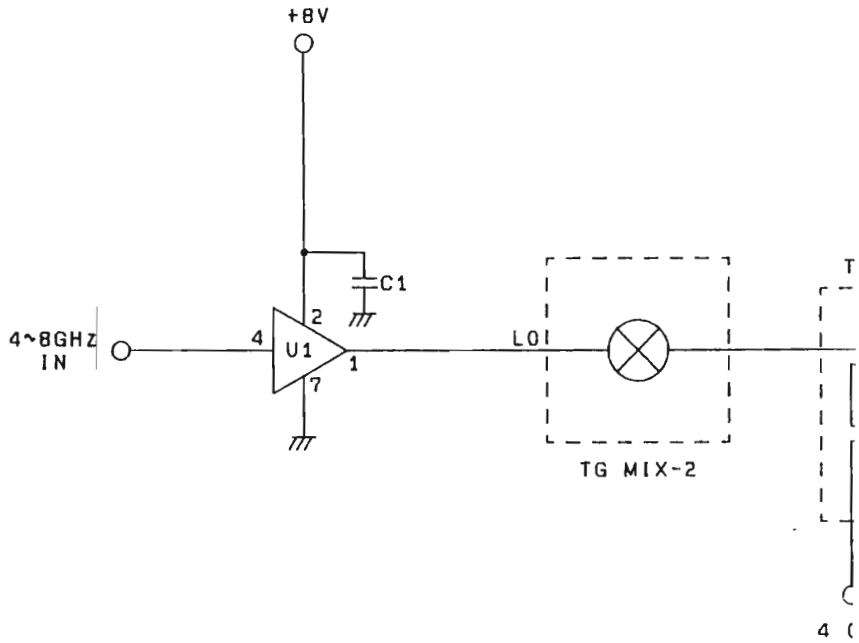

U 1	SIA-S9706*14
	–

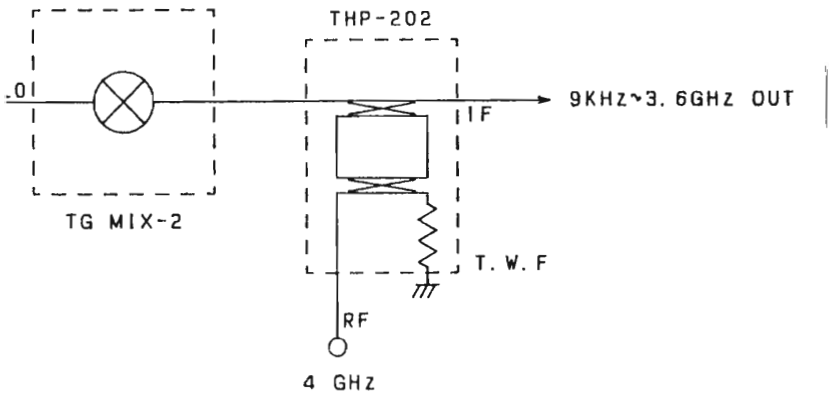

R3361 TG MIX-1
BTB-015722

R3261/3361
TG MIX-2
BTB-015723 (1/1)

Parts No.	Advantest Stock No.	Description					Note
D1	SDS-MA4E204L2	SCHOTTKY BEAM-LEAD TEE					
R1	RCP-AH470	FXD	CHIP	470Ω	±5%	1/8W	
R2	RCP-AH100	FXD	CHIP	100Ω	±5%	1/8W	

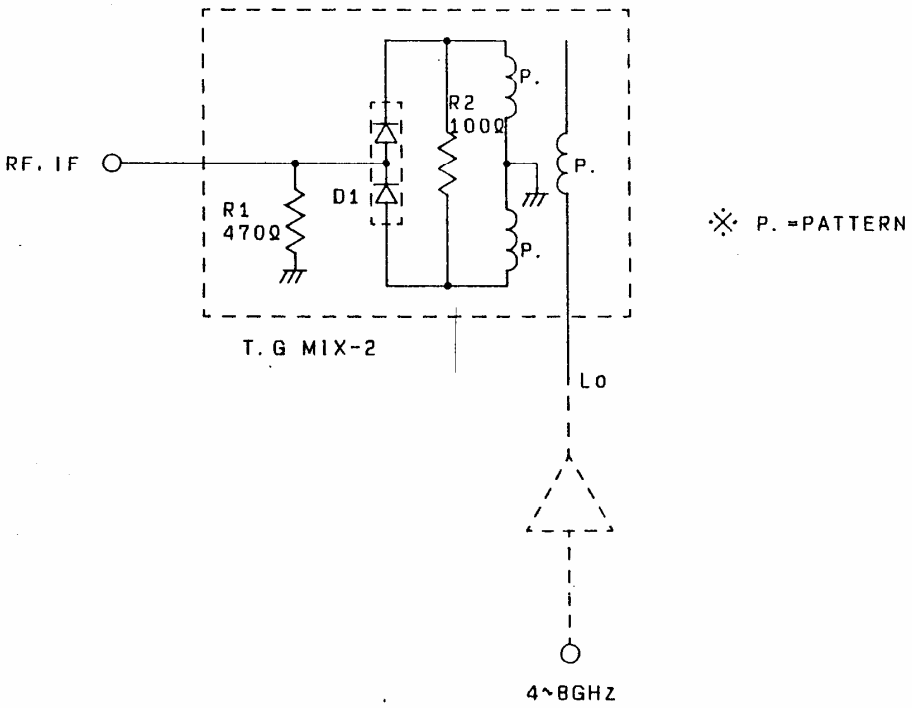

R3361 TG MIX-2
BTB-015723

R3261/3361
MOTHER
BLH-015674 (1/1)

Parts No.	Advantest Stock No.	Description					Note
C1	CSM-TG1U50V	FXD	CER	1μF	+80%, -20%	50V	
C2	CSM-TG1U50V	FXD	CER	1μF	+80%, -20%	50V	
C3	CCK-CV470U16V	FXD	ELECT	470μF	±20%	16V	
C4	CCK-CV470U16V	FXD	ELECT	470μF	±20%	16V	
C6	CCK-BX47U35V	FXD	ELECT	47μF	±20%	35V	
C7	CSM-TG1U50V	FXD	CER	1μF	+80%, -20%	50V	
C8	CSM-AZ1000P50V	FXD	CER	1000PF	±10%	50V	
C9	CSM-AZ1000P50V	FXD	CER	1000PF	±10%	50V	
D1	SDZ-W050	ZENER DIODE					
D2	SDZ-W050	ZENER DIODE					
D3	SDZ-W110	ZENER DIODE					
J1	JCS-BQ096JX01	CONNECTOR					
J2	JCS-BQ128JX01	CONNECTOR					
J3	JCS-BQ096JX01	CONNECTOR					
J6	JCR-AF050PX01	CONNECTOR					
J7	JCR-AF026PX01	CONNECTOR					
J8	DCB-RR0800X02-1	CABLE ASSEMBLY					
J9	JCF-AC001JX06	CONNECTOR					
J10	DCB-QS3239X05-1	CABLE ASSEMBLY					
J11	JCP-AA012PX07	CONNECTOR					
J12	JCS-BZ002PX02	CONNECTOR					
J13	JCR-AF016PX02	CONNECTOR					
L1	LCL-T00084A	COIL		(CUSTOM DEVICE)			
L2	LCL-T00084A	COIL		(CUSTOM DEVICE)			
L3	LCL-B00811	COIL		1.5μH	±10%		
Q1	STP-2SA642-33	TRANSISTOR		PNP			
Q2	STN-RN1002	TRANSISTOR		NPN			
Q3	STN-2SC2983	TRANSISTOR		NPN			
R1	RAY-AL10K6	FXD	RA	10kΩ×6	±5%		
R2	RCB-AG470	FXD	CAR	470Ω	±5%	1/6W	
R3	RCB-AG470	FXD	CAR	470Ω	±5%	1/6W	
R4	RCB-AG220	FXD	CAR	220Ω	±5%	1/6W	
R5	RCB-AG560	FXD	CAR	560Ω	±5%	1/6W	
R6	RCB-AG330	FXD	CAR	330Ω	±5%	1/6W	
R7	RCB-AG10K	FXD	CAR	10kΩ	±5%	1/6W	
U1	SIA-7808U	Voltage Regulator 8V					
U2	SIM-74HC05S	HEX INVERTERS OPEN-COLLECTOR OUTPUT					
U3	SMM-8464CS	8k WORD×8-BIT STATIC RAM					
U4	SMM-8464CS	8k WORD×8-BIT STATIC RAM					
U5	SIM-74HC138S	3 TO 8 LINE DECODERS/DEMULTIPLEXRS					

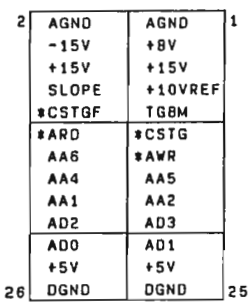

J7 (TG)

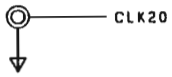

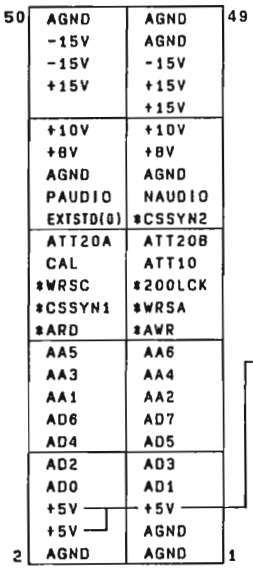

J6 (RF)

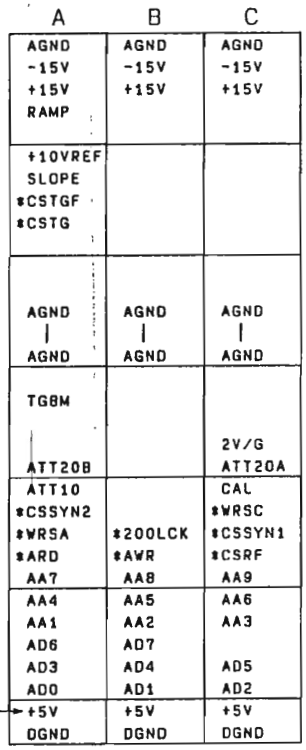

J5 (RF CONT)

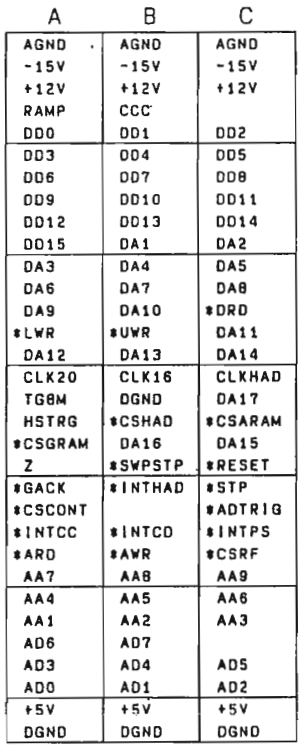

J4 (A/D)

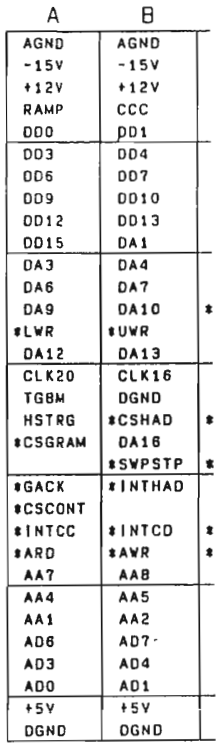

J3 (CONTROL

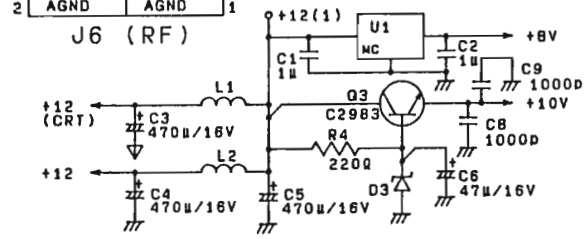

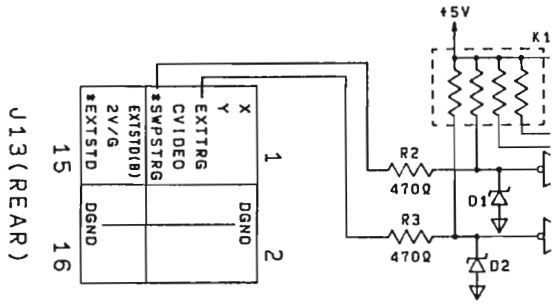

	Land meaning • ··· a connection
	··· Plot grand

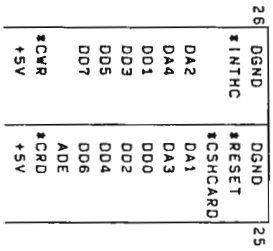

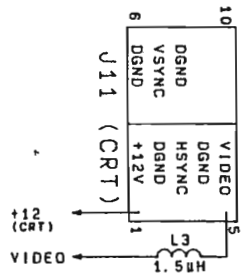

A	B	C
AGND	AGND	AGND
-15V	-15V	-15V
+12V	+12V	+12V
RAMP	CCC	
DD0	DD1	DD2
DD3	DD4	DD5
DD6	DD7	DD8
DD9	DD10	DD11
DD12	DD13	DD14
DD15	DA1	DA2
DA3	DA4	DA5
DA6	DA7	DA8
DA9	DA10	*DRD
*LWR	*UWR	DA11
DA12	DA13	DA14
CLK20	CLK16	CLKHAD
TG8M	DGND	DA17
HSTRG	*CSHAD	*CSARAM
*CSGRAM	DA16	DA15
	*SWPSTP	*RESET
*GACK	*INTHAD	
*CSCONT		
*INTCC	*INTCD	*INTPS
*ARD	*AWR	*CSRF
AA7	AA8	AA9
AA4	AA5	AA6
AA1	AA2	AA3
AD6	AD7	
AD3	AD4	AD5
AD0	AD1	AD2
+5V	+5V	+5V
DGND	DGND	DGND

J3 (CONTROLLER)

A	B	C	D
AGND	AGND	AGND	AGND
-15V	-15V	-15V	-15V
+12V	+12V	+12V	+12V
RAMP	CCC	*CSMCARD	HSYNC
DD0	DD1	DD2	VSYNC
DD3	DD4	DD5	VIDEO
DD6	DD7	DD8	*INTMC
DD9	DD10	DD11	ADE
DD12	DD13	DD14	*CWR
DD15	DA1	DA2	*CRD
DA3	DA4	DA5	DA17
DA6	DA7	DA8	DA16
DA9	DA10	*DRD	DA15
*LWR	*UWR	DA11	*CSAD
DA12	DA13	DA14	*CSRAMP
CLK20	CLK16	CLKHAD	
TG8M	DGND	*ADCS	*ADWE
HSTRG	*CSHAD	*CSARAM	*ADRD
*CSGRAM	*BR	*BG	*BGACK
*EXTSTD	*SWPSTP	*RESET	AP
*GACK	*INTHAD	*INTAD	*CSLOG
*CSCONT	*INTSE	BP	*CSIF
*INTCC	*INTCD	*INTPS	Z
*ARD	*AWR	*CSRF	*CSBRAM
AA7	AA8	AA9	
AA4	AA5	AA6	CVIDEO
AA1	AA2	AA3	
AD6	AD7		
AD3	AD4	AD5	
AD0	AD1	AD2	
+5V	+5V	+5V	+5V
DGND	DGND	DGND	DGND

J2 (CPU)

C	B	A	
AGND	AGND	AGND	1
-15V	-15V	-15V	
+15V	+15V	+15V	
RAMP	PAUDIO	NAUDIO	
DD0	DD1	DD2	5
DD3	DD4	DD5	
DD6	DD7	DD8	
DD9	DD10	DD11	
DD12	DD13	DD14	
DD15	DA1	DA2	10
DA3	DA4	DA5	
DA6	DA7	DA8	
DA9	DA10	*DRD	
*LWR	*UWR		
*CSAD	*CSRAMP	*ADTRIG	15
CLK20	DGND	CLKHAD	
*ADCS	*ADWE	LINE	
HSTRG		*ADRD	
*BR	* G	*BGACK	
*SWPSTP	*RESET	AP	20
*STP	*INTAD	*CSLOG	
*INTSE	BP	*CSIF	
Z	EXTTRG	Y	
*ARD	*AWR	X	
AA7	AA8	AA9	25
AA4	AA5	AA6	
AA1	AA2	AA3	
AD6	AD7		
AD3	AD4	AD5	
AD0	AD1	AD2	30
+5V	+5V	+5V	
DGND	DGND	DGND	32

J1 (ANALOG)

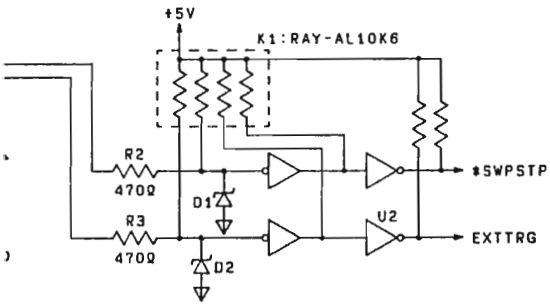

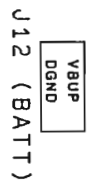

R3261 MOTHER
BLH-015674 1/2

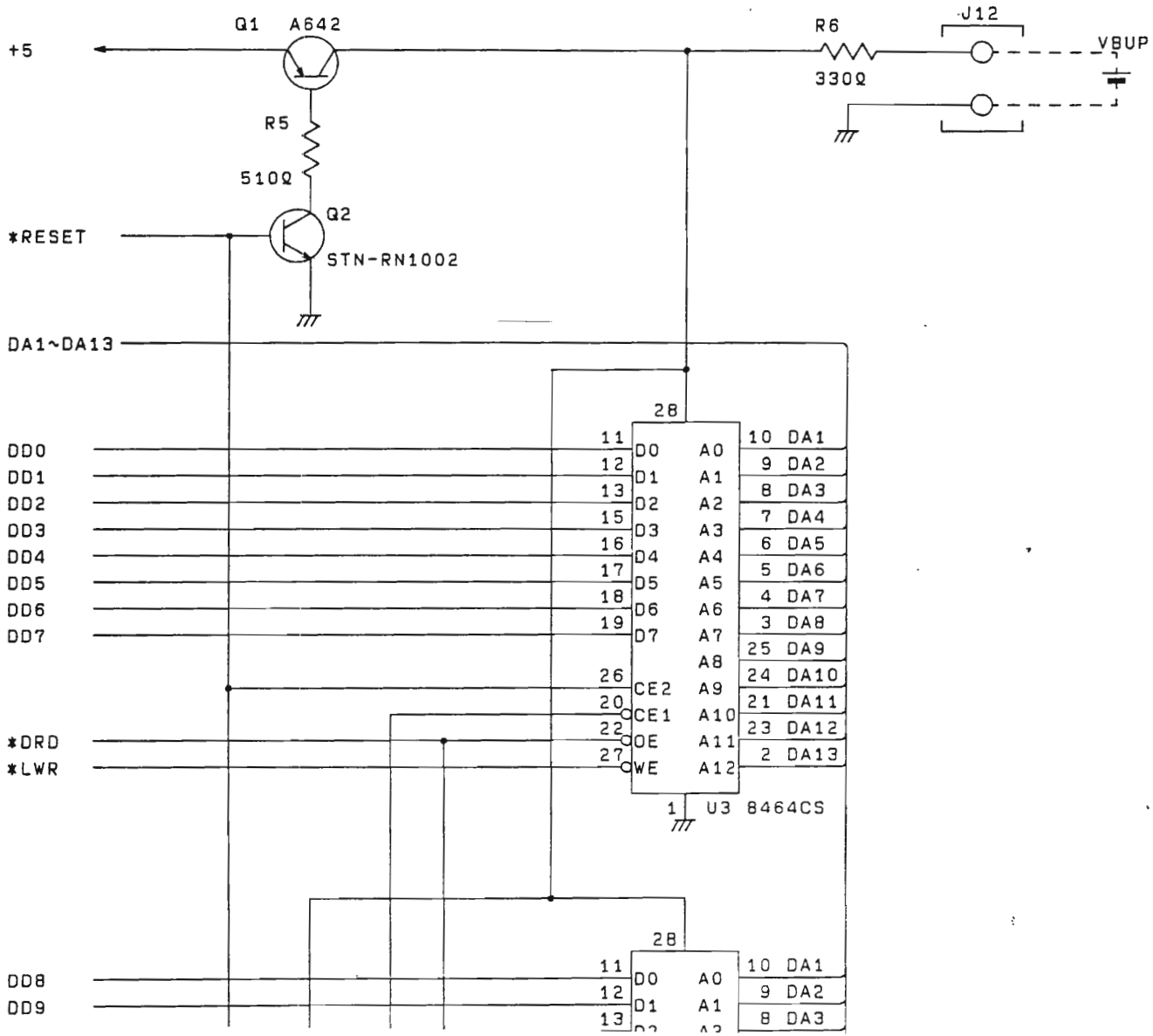
+5
Q1 A642
R5
510Ω
Q2
STN-RN1002
*RESET
DA1~DA13
R6
330Ω
J12
VBUP
DD0
DD1
DD2
DD3
DD4
DD5
DD6
DD7
*DRD
*LWR
28
11 D0 A0 10 DA1
12 D1 A1 9 DA2
13 D2 A2 8 DA3
15 D3 A3 7 DA4
16 D4 A4 6 DA5
17 D5 A5 5 DA6
18 D6 A6 4 DA7
19 D7 A7 3 DA8
A8 25 DA9
26 CE2 A9 24 DA10
20 CE1 A10 21 DA11
22 OE A11 23 DA12
27 WE A12 2 DA13
1 U3 8464CS
DD8
DD9
28
11 D0 A0 10 DA1
12 D1 A1 9 DA2
13 8 DA3

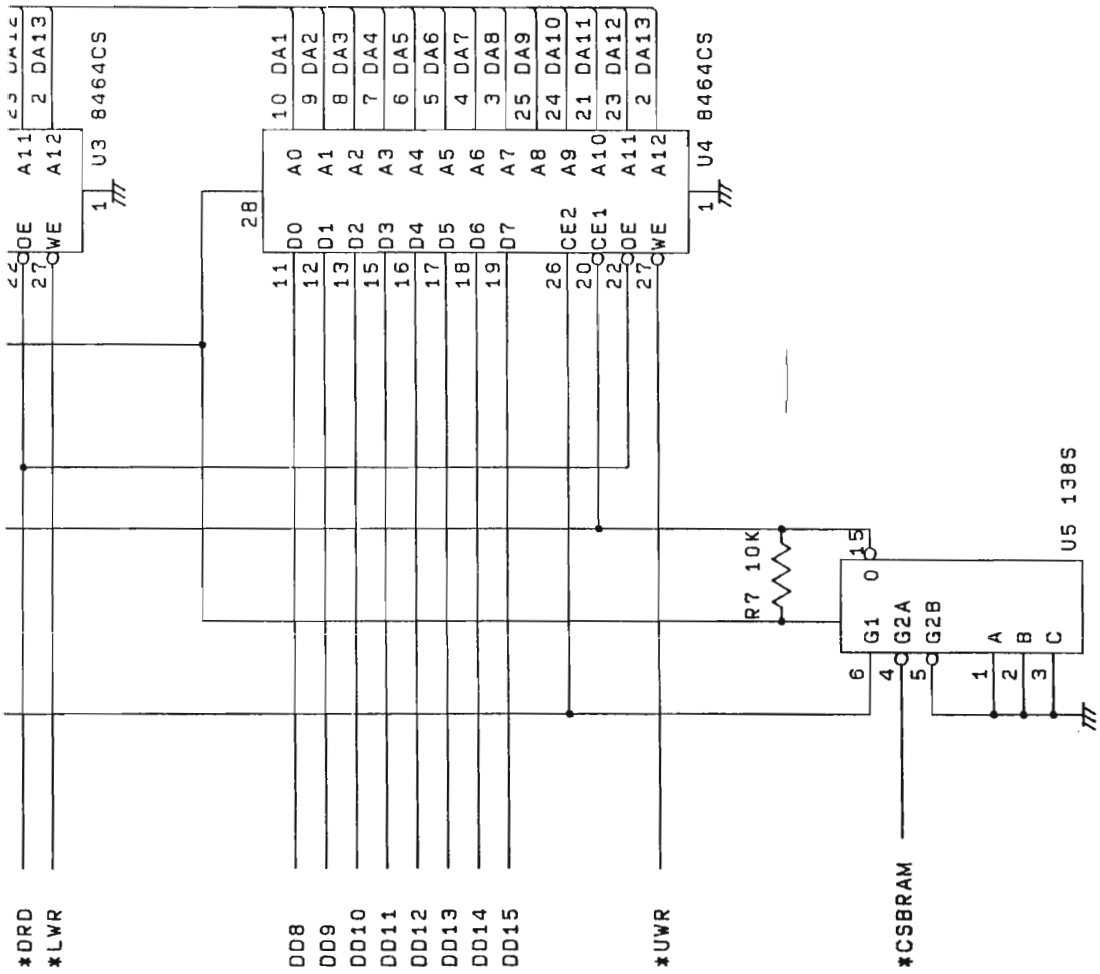

R3261 MOTHER
BLH-015674 2/2

R3261/3361
BATT. HOLDER
BLB-016053 (1/1)

Parts No.	Advantest Stock No.	Description	Note
	DBP-000470	Ni-cd BATTERY	
	DCB-QR1937X02-1	CABLE ASSEMBLY	

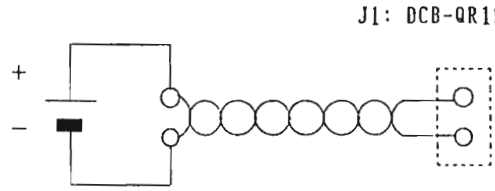

R3261/3361 BATT. HOLDER
BLB-016053

8. REPLACEABLE MECHANICAL PARTS

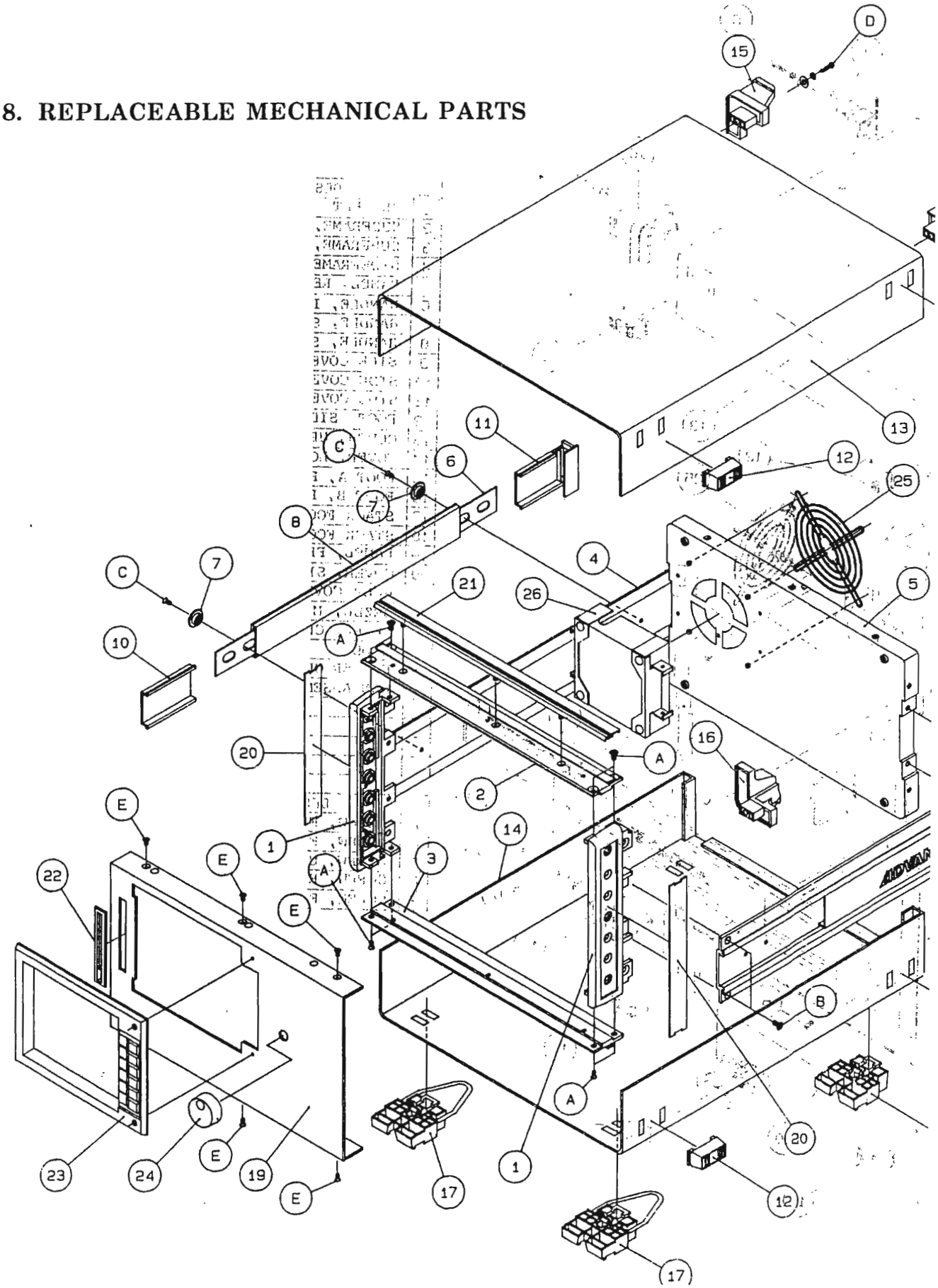

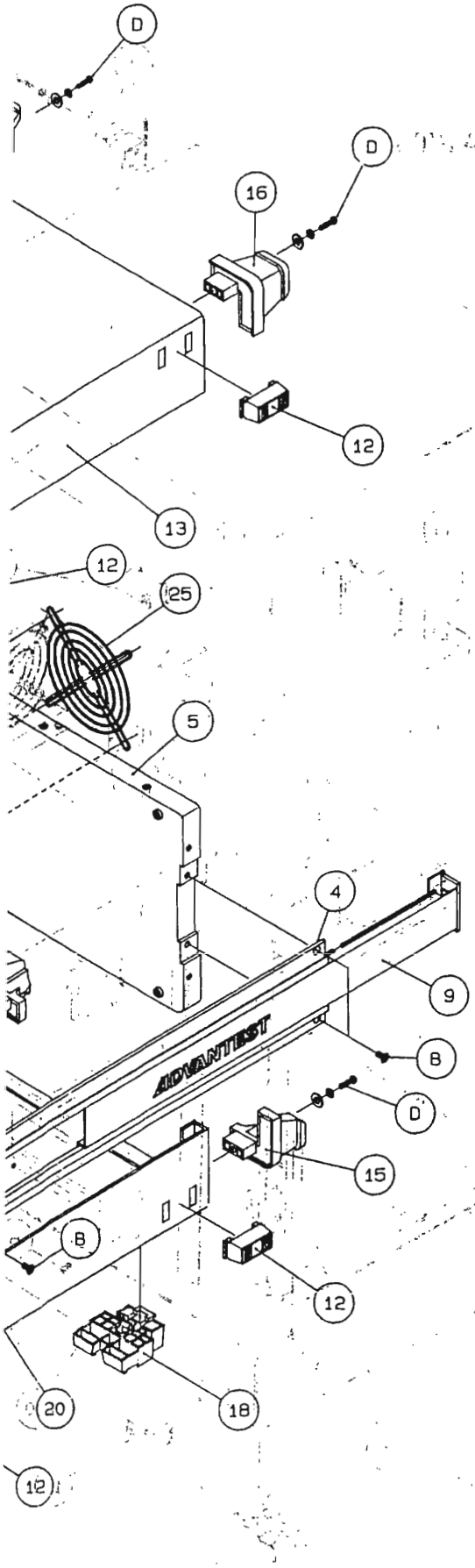

No.	DESCRIPTION	STOCK No.	QTY
1	BRACKET	MCT-55609A	2
2	SUBFRAME, UPPER	MHE-61712	1
3	SUBFRAME, LOWER	MHE-61713	1
4	SIDEFRAME	MHT-61471	2
5	PANEL, REAR	MCT-58898A	1
6	HANDLE, INNER	MBE-57474A	1
7	HANDLE, SPACER	MKX-32181A	2
8	HANDLE, SLEEVE	MPS-57469A001A	1
9	SIDE COVER, DECORATIVE	MPS-54301A001A	1
10	SIDE COVER, FRONT	MPX-57551A	1
11	SIDE COVER, REAR	MPX-57552A	1
12	FOOT, SIDE	MMX-20403A	4
13	COVER, UPPER	MBX-58917B	1
14	COVER, LOWER	MBX-58918B	1
15	FOOT A, REAR	MMX-54288A	2
16	FOOT B, REAR	MMX-54289A	2
17	STACK FOOT A	MEX-57550A	2
18	STACK FOOT B	MEX-54287A	2
19	PANEL, FRONT	MBS-59689A	1
20	COVER, SIDE BELT	MBX-55737A	2
21	BELT COVER	MPX-59711A	1
22	BEZEL, MEMORY CARD	MMX-61756A	1
23	BEZEL, CRT	MMX-59742A	1
24	KNOB	MMX-54164A	1
25	FINGER GUARD	YEE-000271	1
26	FAN ASSEMBLY	WK4-8110703	1

No.	DESCRIPTION	SIZE	QTY
A	SCREW, FLAT HEAD	M4X8	8
B	SCREW, FLAT HEAD	M4X6	8
C	SCREW, UNLOOSEN PROCESS	M4X8	2
D	SCREW, ROUND HEAD	M4X30	4
E	SCREW, FLAT HEAD	M3X6	6

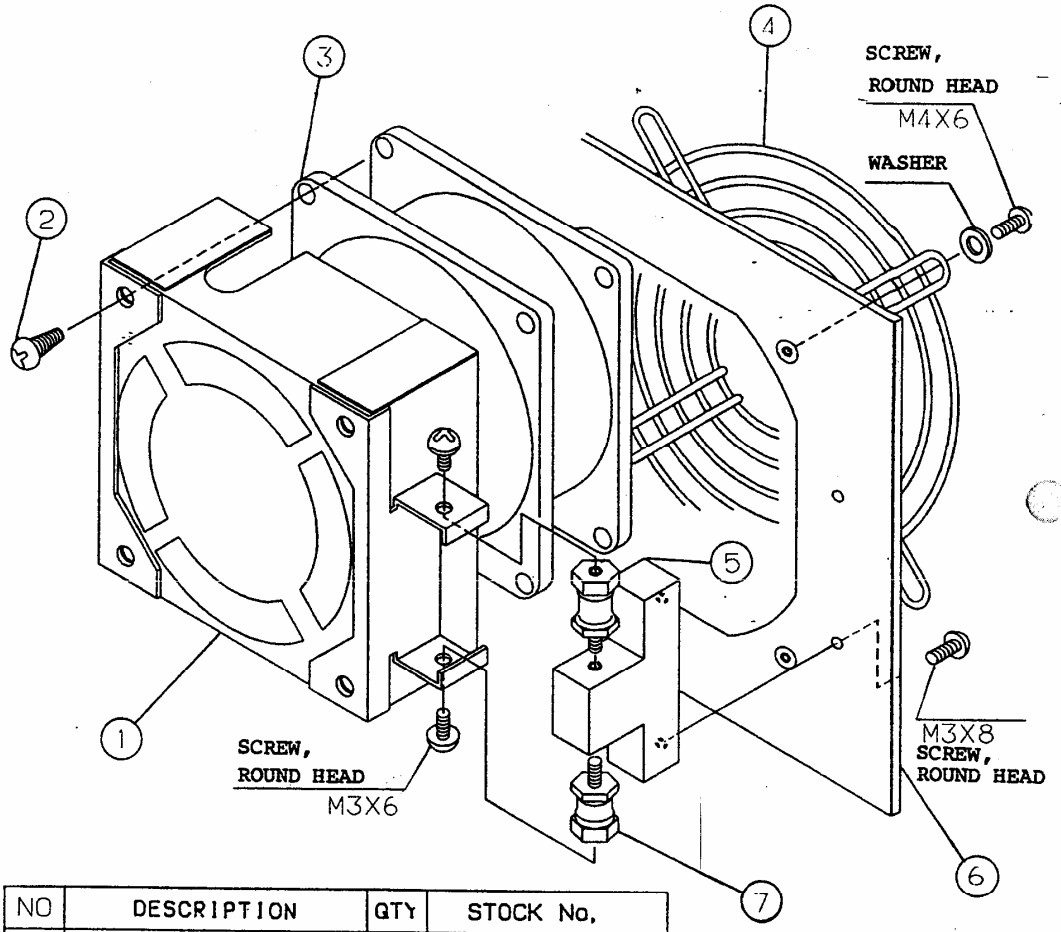

NO	DESCRIPTION	QTY	STOCK No.
1	FAN SHIELD	1	MBE-32047
2	SELF TAPPING SCREW	3	YKG-V01508
3	FAN	(1)	DMF-001006
4	FINGER GUARD	1	YEE-000271
5	FAN SUPPORT C	2	MKJ-32046
6	REAR PANEL	1	MCT-58898
7	RUBBER CUSHION	4	YEE-001489