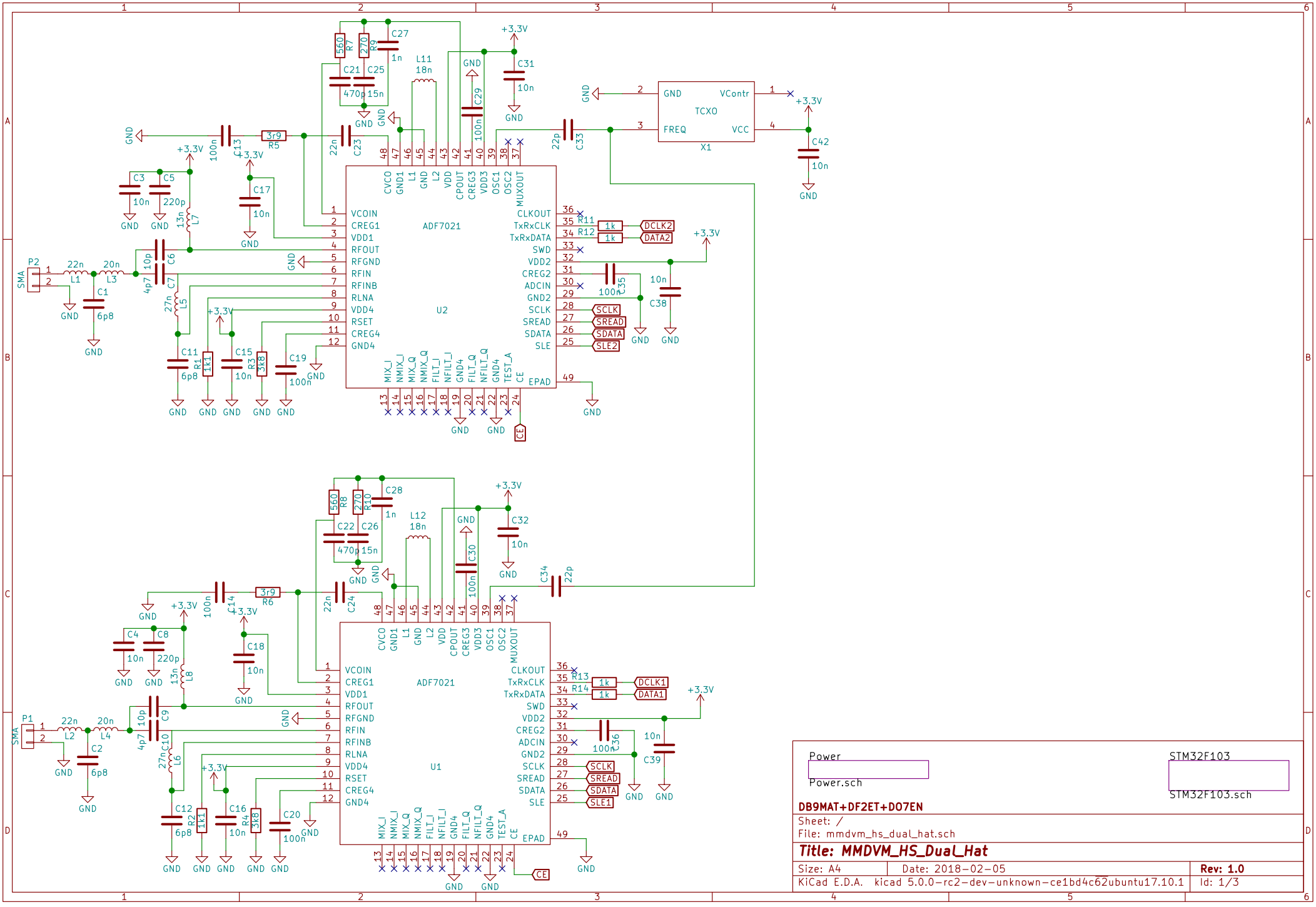
ADF7021
U2
U1
TCXO
X1
VCOIN
CREG1
VDD1
RFOUT
RFGND
RFIN
RFINB
RLNA
VDD4
RSET
CREG4
GND4
CLKOUT
TxRxCLK
TxRxDATA
SWD
VDD2
CREG2
ADCIN
GND2
SCLK
SREAD
SDATA
SLE
EPAD
DCLK2
DATA2
DCLK1
DATA1
SLE2
SLE1
CE
Power
Power.sch
STM32F103
STM32F103.sch
DB9MAT+DF2ET+DO7EN
Sheet: /
File: mmdvm_hs_dual_hat.sch
Title: MMDVM_HS_Dual_Hat
Size: A4
Date: 2018-02-05
Rev: 1.0
KiCad E.D.A. kicad 5.0.0-rc2-dev-unknown-ce1bd4c62ubuntu17.10.1
Id: 1/3

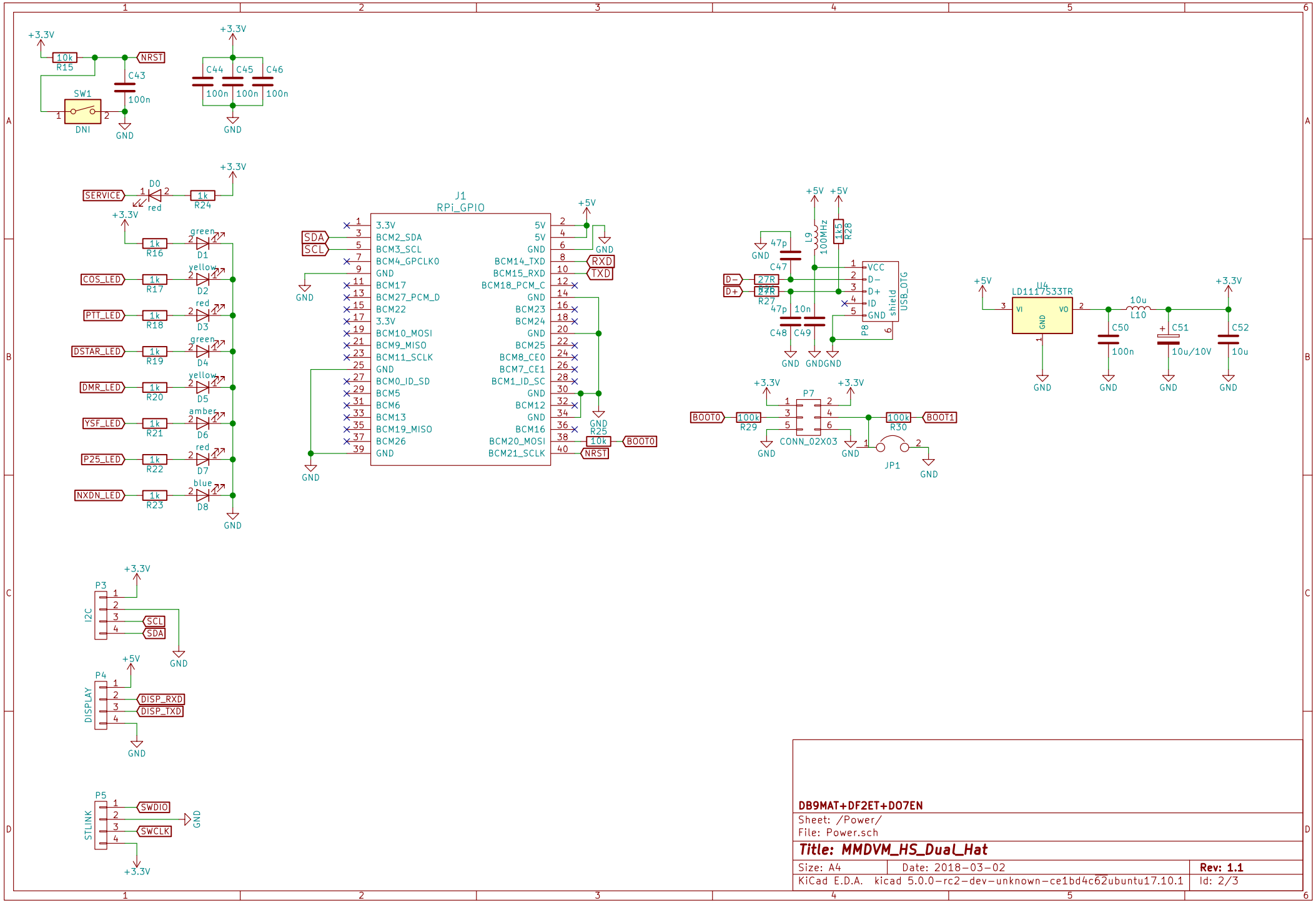

DB9MAT+DF2ET+DO7EN

Sheet: /Power/
File: Power.sch

Title: MMDVM_HS_Dual_Hat

Size: A4	Date: 2018-03-02	**Rev: 1.1**
KiCad E.D.A. kicad 5.0.0-rc2-dev-unknown-ce1bd4c62ubuntu17.10.1		Id: 2/3

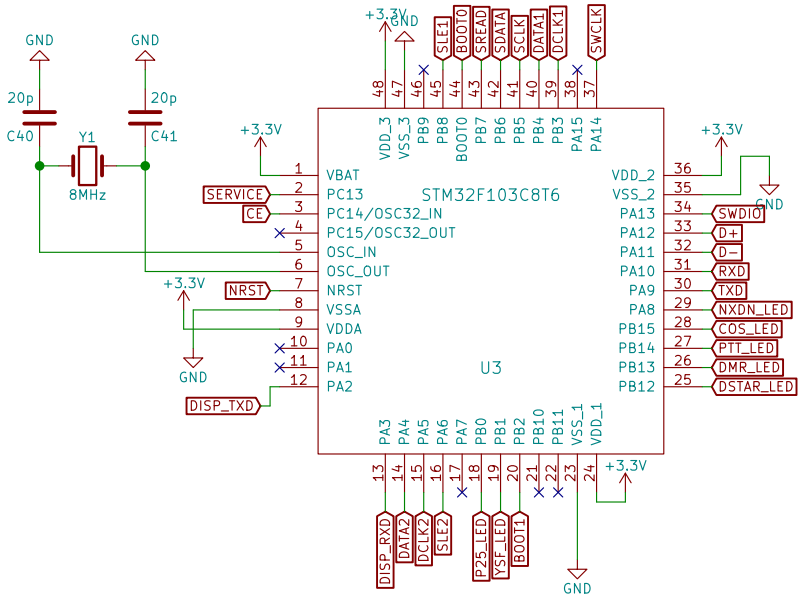

DB9MAT+DF2ET+DO7EN

Sheet: /STM32F103/
File: STM32F103.sch

Title: MMDVM_HS_Dual_Hat

Size: A4	Date: 2018-02-05	**Rev: 0.1**
KiCad E.D.A. kicad 5.0.0-rc2-dev-unknown-ce1bd4c62ubuntu17.10.1		Id: 3/3