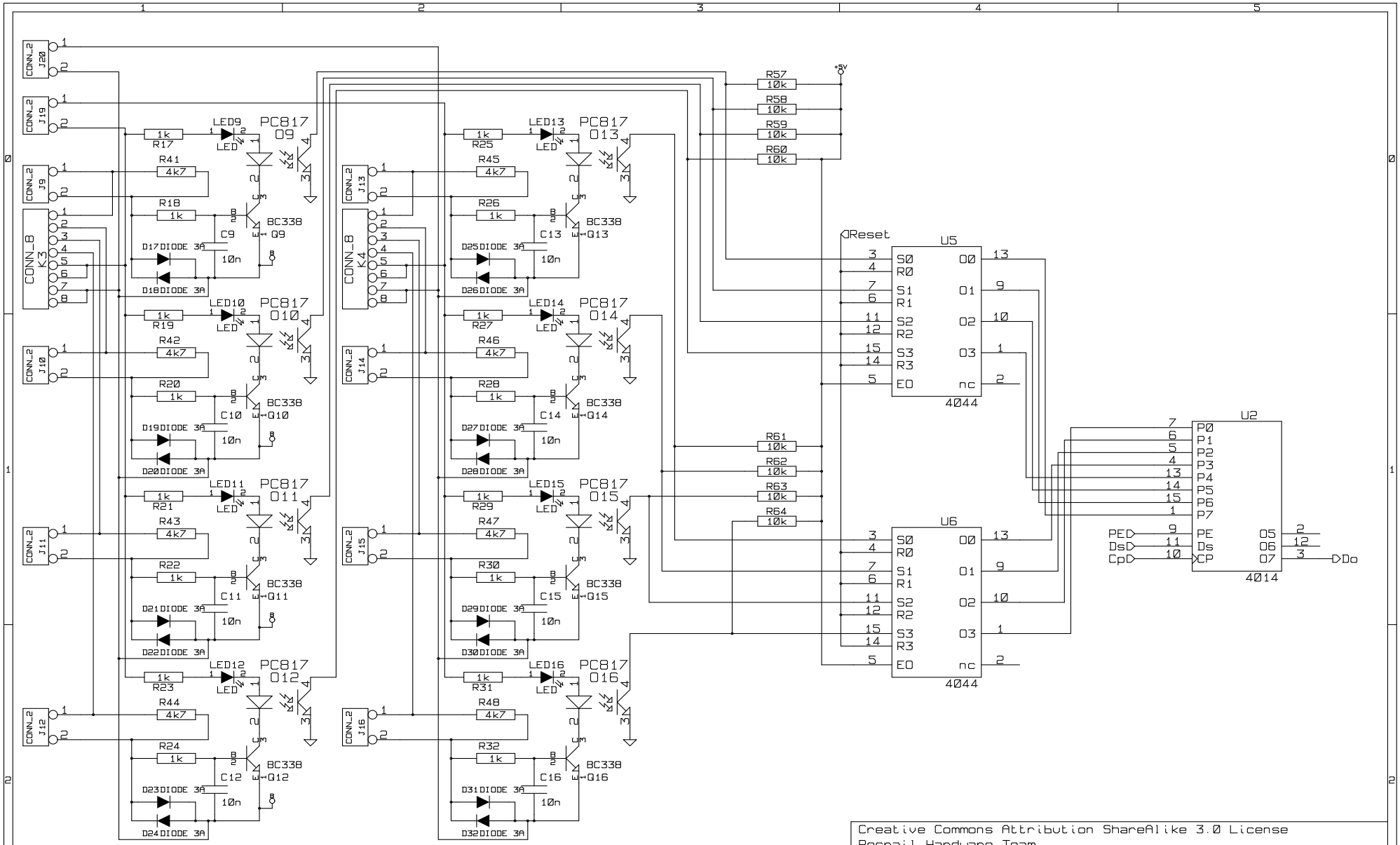

Creative Commons Attribution ShareAlike 3.0 License
Rocrail Hardware Team
Christian Wichmann, Rob Versluis, Torbjörn Björk
http://www.rocrail.net

Title: ORF-1, Open Rocrail Feedback		
Size: A4	Date: 18 jun 2008	Rev: 1.12
KiCad E.D.A.		Sheet: 2/2