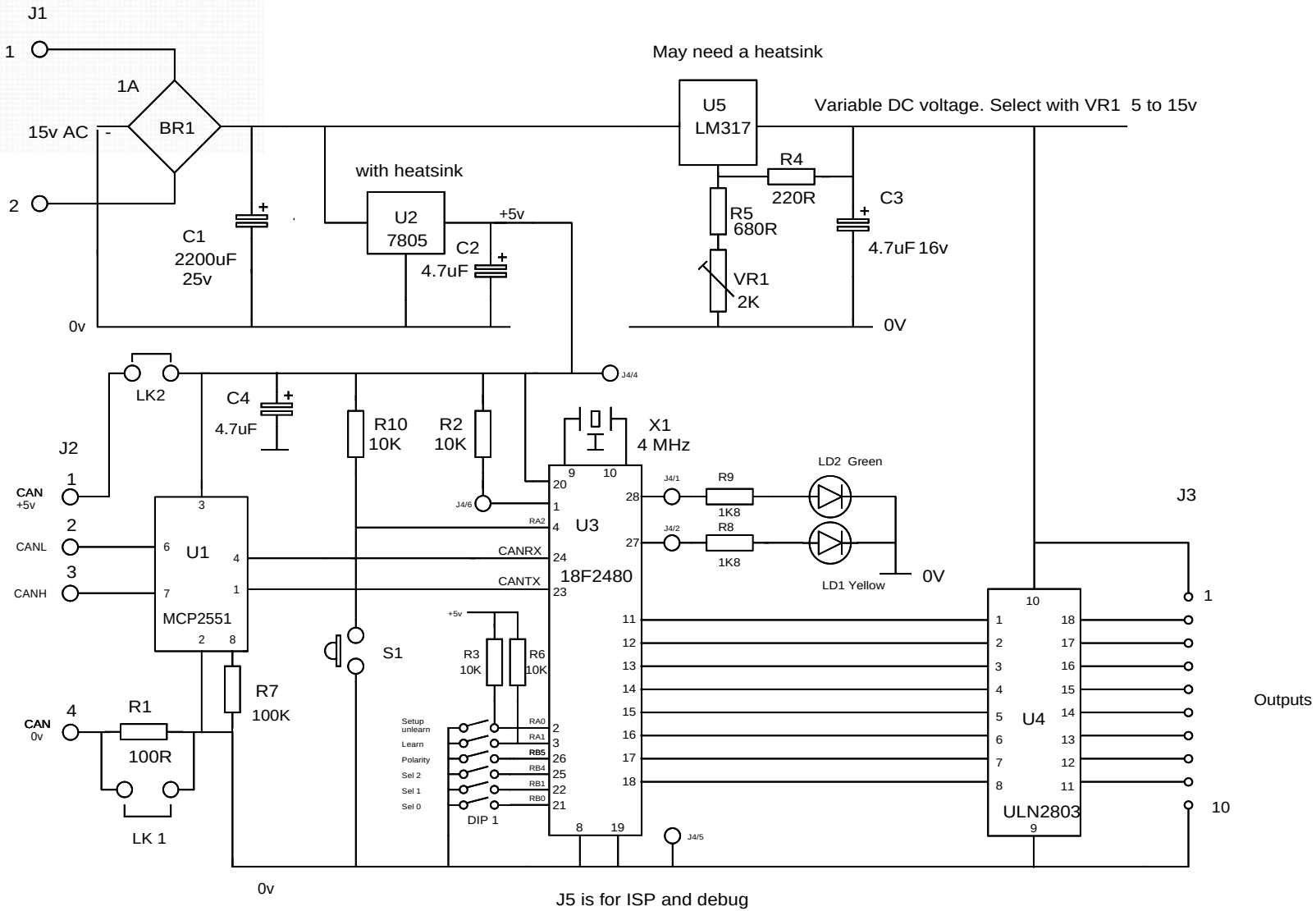


# CBUS Steady state Node

CANACC8 M P Bolton Rev E 03/11/09 ©