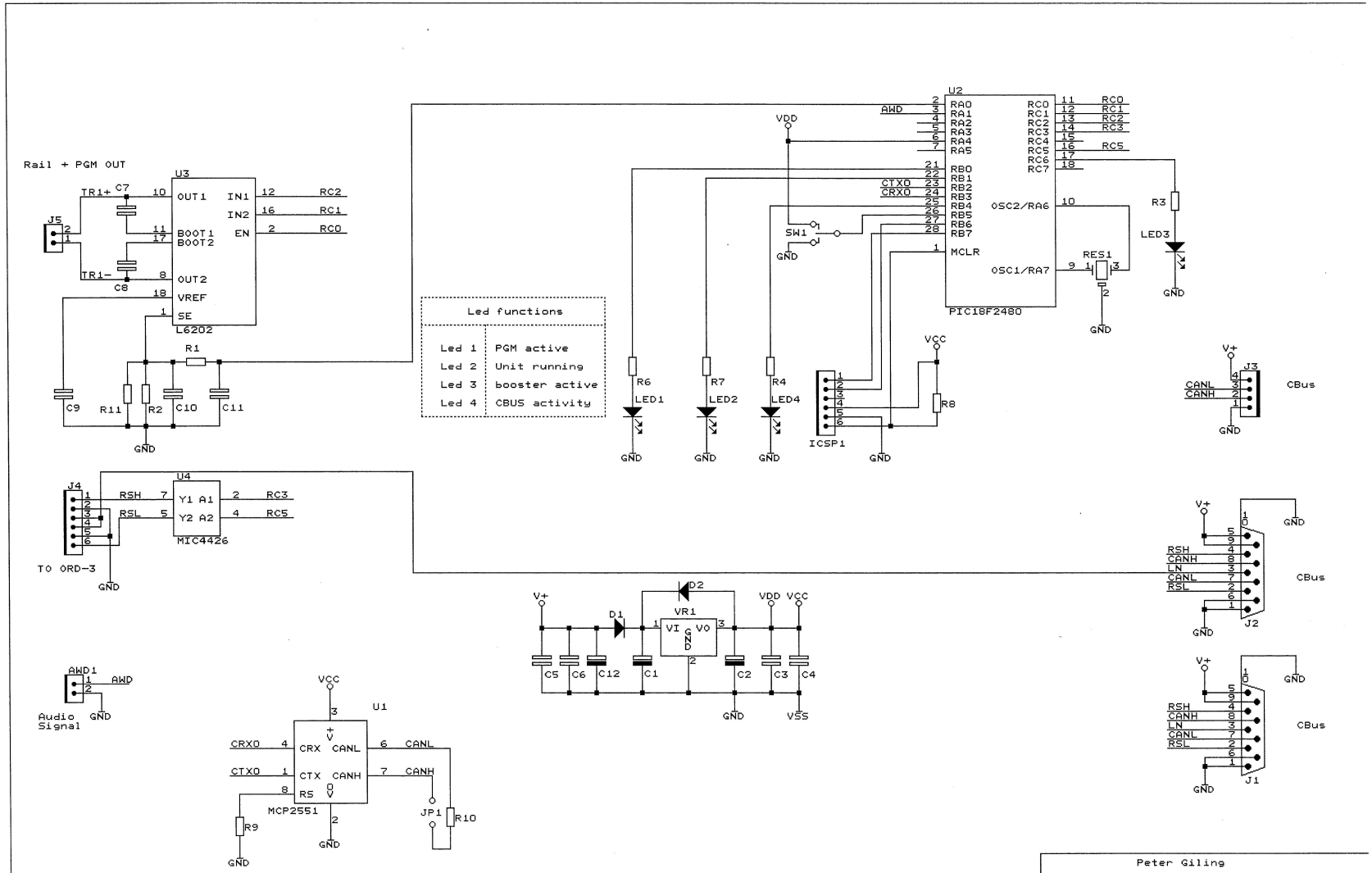

Led functions	
Led 1	PGM active
Led 2	Unit running
Led 3	booster active
Led 4	CBUS activity

Peter Giling
peter@phgiling.net

Title: CANcmd DCC central unit

Size	Document Number	REV
B	CAN-GC3	

Date: October 22, 2011 Sheet of