DATA ANALYTICS AND APPLIED MATHEMATICS (DAAM)
e-ISSN: 2773-4854
VOL. 2, ISSUE 2, 060 – 068
DOI: https://doi.org/10.15282/daam.v2i2.6830

ORIGINAL ARTICLE

A mathematical model of a brushed DC motor system

N. N. A. Rahman[1,*], N. M. Yahya[1]

[1]Faculty of Manufacturing and Mechatronic Engineering Technology, College of Engineering Technology, 26600 Pekan, Pahang, Malaysia.

ABSTRACT – Mathematical model has been proposed for some system that involves a brushedDC motor and it is widely used in industry. Brushed DC motor ideals for applications with a low- torque, manage to change pace or speed and it is widely used in many applications such as x-y table positioning system, conveyor systems and other system that required to use the features that brushed DC motor have. Mathematical model of brushed DC motor in order to verify the performance of the DC motor. In this paper, mathematical model of brushed DC motor will be derived from a brushed DC motor circuit that consist of two parts that are electrical and mechanical part. To validate the functionality of mathematical model, the performance of the brushed DC motor without any controller will be compared with the brushed DC motor with the presence of PI-PD controller that will be tuned by trial-and-error method. Performances of both brushed DC motor with and without controller will be compared in terms of transient response which are, rise time, T_r, settling time, T_s, steady state error, e_{ss} and lastly percentage overshoot. At the end of the study, the brushed DC motor with PI-PD controller show a better performance compared to the brushed DC motor without any controller.

ARTICLE HISTORY
Received: 21/08/2021
Revised: 24/11/2021
Accepted: 02/12/2021

KEYWORDS
DC motor
PI-PD controller
Transient response
Conveyor system
Trial-and-error method

INTRODUCTION

An electrical motor is responsible for the majority of the mechanical growth we see around us. Electrical motor is a mechanism that will transforms an electrical energy into mechanical energy. There are two categories of motors known as AC motors, operate alternating current and brushed DC motors, operate on direct current. Based on a study carried by [1], brushed DC motors are used in a variety of control systems, including home electrical systems, cars, trains, as well as process control. The mathematical model is well known to be critical in the design of a control system. Four differenttypes of DC motor have been mentioned by [2] which are permanent magnet motor, DC series motor, DC shunt motor and compound motor. Then, there are few models of DC motor that accurately reflect to the system's action.

For a number of purposes, brushed DC motors are often preferred over AC motors. Brushed DC motors are ideal for low-torque applications, capable to change the pace or speed and it have a wide variety of speed controls options, including both below and above the rated speed. Other than that, it also has a large and powerful staring torque, the priceof the brushed DC motors are also more affordable and last advantages that provide by brushed DC motors is that maintenance of brushed DC motors is simple and takes little or no time [3]. Brushed DC motors have been applied for many applications such as conveyors, turntables and other system that required for variable speed and constant or low-speed torque or accuracy in position [4].

In a system that involve the usage of brushed DC motors, mathematical model with the correct parameters of the model is important because an accurate behavior cannot be provided by the mathematical model if the parameters are not correct [1]. Mathematical model of brushed DC motor can be derived from a brushed DC motor circuit that consist of two parts that is mechanical part that have a rotor while electrical part has input voltage, resistor and also inductor.

Basically, the main goal of this paper is to generate a correct mathematical model of brushed DC motor which will be used in many systems. Then, to validate the functionality of brushed DC motor mathematical model, PI-PD controller will be implemented in order to compare the performance of the brushed DC motor with PI-PD controller and DC motor without using any controller. Mathematical model of brushed DC motor will be analyzed and derived again if the performance of the brushed DC motor with PI-PD controller does not excellent. A great mathematical model of brushed DC motor will provide the best performance especially with an existence of the controller.

METHODOLOGY

Mathematical model of brushed DC motor

In general, the brushed DC motor circuit will be used to generate the mathematical modelling. As explain before, brushed DC motor circuit consist of two part which are electrical part and mechanical part. Below is the figure of the brushed DC motor circuit.

*CORRESPONDING AUTHOR | N. N. A. Rahman | ✉ nurnaajihahabrahman@gmail.com

© The Authors 2019. Published by Universiti Malaysia Pahang Publishing. This is an open access article under the CC BY license.

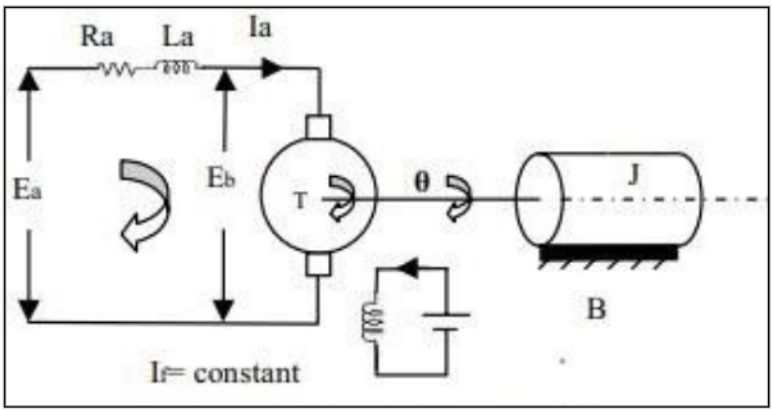

Figure 1. Brushed DC motor circuit.

Based on the Figure 1 above, to develop a mathematical modelling, Kirchoff's voltage law (KVL) can be applied forthe electrical part which consist of voltage source, armature resistance, armature inductance, armature current as well asthe back emf voltage.

With these parameters and the KVL, the equation for the electrical part can be generated as below.

$$E_a = R_a \cdot I_a + L_a \frac{dI_a}{dt} + E_b \tag{1}$$

where

I_a = armature current (A)

E_b = back emf voltage (V)

E_a = voltage source (V)

R_a = armature resistance (Ω)

L_a = armature inductance (H)

Then, back emf which is E_b is proportional to the angular velocity of the shaft, θ by a constant factor, K_b that can be expressed as below.

$$E_b = K_b \frac{d\theta}{dt} \tag{2}$$

From the mechanical part of DC motor circuit, it can be derived as

$$J_m \frac{d^2\theta}{dt^2} + B_m \frac{d\theta}{dt} - T_m \tag{3}$$

From the equation above, J_m can be defined as the rotor moment of inertia, B_m is the frictional coefficient and $T_m$which is the torque of motor.

$$T_m = K_t \cdot I_a \tag{4}$$

For the torque of motor, it is proportional to only the armature current that is I_a by a constant factor, K_t.

From equations that have been derived above, substitution method will be applied into equation 1 and equation 3. By substitute equation 2 into equation 1, it will give a new equation which is equation 5.

$$E_a = R_a \cdot I_a + L_a \frac{dI_a}{dt} + K_b \frac{d\theta}{dt} \tag{5}$$

Then, substitute equation 4 into equation 3 which will create the equation 6.

$$J_m \frac{d^2\theta}{dt} + B_m \frac{d\theta}{dt} = K_t \cdot I_a \tag{6}$$

By implementing the Laplace transform, both equation 5 and equation 6 can be written as:

$$E_a(s) - K_b s\theta(s) = (R_a + sL_a) I_a(s) \tag{7}$$

$$J_m s^2 \theta(s) + B_m s\theta(s) = K_t I_a(s) \tag{8}$$

Next, substitute the equation 8 into equation 7, then the transfer function from the voltage source, $E_a(s)$ to the outputangle, $\theta(s)$, directly follows:

$$\frac{\theta(s)}{E_a(s)} = \frac{K_t}{J_m L_a s^3 + (J_m R_a + B_m L_a) s^2 + R_a B_m s + K_t K_b s} \tag{9}$$

By assuming the value for each brushed DC motor parameters which have been stated below thus, the transfer function, equation 10 of the brushed DC motor can be expressed as:

$J_m = 0.093\ Kg.m^2$

$B_m = 0.008\ Nms$

$K_b = 0.6\ \ V/rad\ s^{-1}$

$K_t = 0.7274\ \ Nm/A$

$R_a = 0.6\ \Omega$

$L_a = 0.006\ H$

$$\frac{\theta(s)}{E_a(s)} = \frac{0.7274}{0.000558s^3 + 0.055848s^2 + 0.44124s} \tag{10}$$

Equation 10 above will be used in order to verify the performance of the brushed DC motor itself. It will give an output response which by having a simulation in MATLAB/Simulink software. Different input values of parameters will provide a different system response such as stable or unstable system. In a simple way, mathematical model that derive from the brushed DC motor circuit will influence the system response.

PI-PD controller

PI-PD or proportional integral-proportional derivative controller is widely used other than PID controllers due to its capability for disturbance rejection such as load disturbance, minimize the rise time, and settling time. The concept of this controller is that the first controller, PI controller placed in forward path while the PD controller placed in the feedback loop.

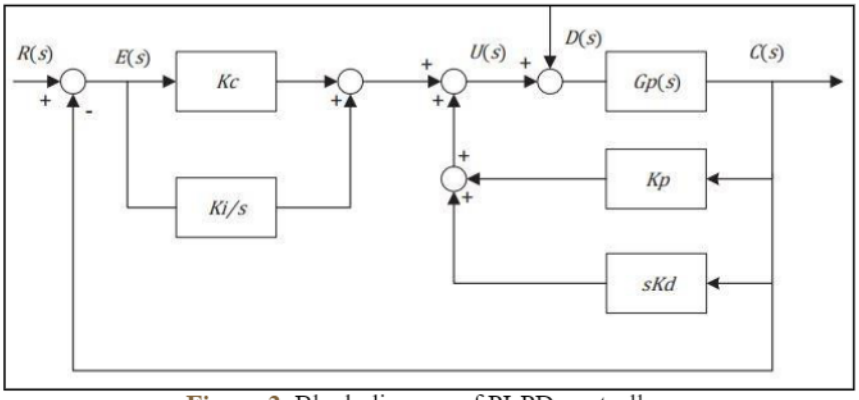

Figure 2. Block diagram of PI-PD controller.

Based on Figure 2 above, there will be three different types of gains that need to be implemented in the block diagram which are two of proportional gain, K_{p1}, K_{p2}, integral gain, K_i and derivative gain, K_d. The overall of equations of PI-PD that involve the parameters' gain can be expressed as:

$$u(t) = K_i \int e(t)\,dt + K_c e(t) - \left(K_p c(t) + K_d \frac{dc(t)}{dt} \right) \tag{11}$$

The output of the equation, $u(t)$ which have been written above is fed into the plant that is the transfer function in equation 10, yielding a new output, $c(t)$. The new output, $c(t)$ is then fedback to find the new error signal $e(t)$ by comparing it to the reference. The controller computes an update to the control input based on this new error signal.

Tuning of PI-PD controller

In a controller, there are many ways to tune the controller's parameters, which is K_p, K_i, and K_d. For example, widely used tuning techniques are the Ziegler-Nichols method, bio-inspired computation or known as swarm intelligence, subset from artificial intelligence and also trial and error method. In this context, where it will compare a brushed DC motor without a controller with a brushed DC motor with a PI-PD controller, the trial-and-error method will be implemented. This step is important in order to validate the mathematical model of brushed DC motor that have been derived earlier is correct.

Trial and error are a simple way to tune a controller parameter. Since little or no knowledge of the regulated process is needed, this method is simple to use for process operators [5]. Gains' parameter which are K_c, K_p, K_i and K_d can be tuned by increase the proportional gain until the control loop's output oscillates at a constant rate, then set the integral and derivatives terms to zero. This proportional gain increase should be done in such a way that the system's response time improves while remaining stable.

Next, set the integral term once the P-response is quick enough to reduce the oscillations gradually. Adjust the I value before the steady state error is reduced, but it may lead to the overshoot. Last step is to increase the derivative gain before the device responds rapidly to its set point after the P and I parameters have been set to desired values with a minimal steady state error. The overshoot of the controller response is minimized by increasing the derivative expression.

For tuning process, four different gains will be involved which are K_c, K_p, K_i and K_d. In a closed loop step response system, there are few characteristics that will influence the dynamic structure. First will be the rise time, T_r, which is the time it takes for the plant output to go from 10% to 90% of the final value. Then, times it will takes for the system to be in its steady state, which is settling time, T_s.

Next characteristics is peak time, T_p where it is the time taken for the output to reach it maximum value. Furthermore, percentage overshoot which can be explained as how much higher the maximum point than stable state is calibrated against the stable state. Lastly, the steady state error, e_{ss} which can be defined as the difference between the input step value with the final value.

Development of PI-PD controller for brushed DC motor

Development of the PI-PD controller involves the structure of block diagram, which can be created by using a software, MATLAB/Simulink. The transfer function of the brushed DC motor, which had been derived and assumed, was implemented in development process of the PI-PD controller. The presence of PI-PD controller with a brushed DC motor can be used for comparing the differences with a brushed DC motor only without applying any controller concerning its performance toward the system with reference to the characteristics which will manipulate the feedback.

Other than that, the types of controller's parameter gains that will be allocated is important in order to have the desired output or performance of the brushed DC motor with the presence of controller. Four gains will be implemented in this controller, which are proportional gain, K_c and K_p, integral gain, K_i, and derivative gain, K_d. Each of the gains will have their function and can affect the system response.

K_p and K_c is a measure of system stiffness, and it specifies the amount of restoring force to be applied to counter the position error. At the same time, the static torque load on the system is related to integral gain, K_i. Value of K_i "pushes" the system at the end of the step to zero positioning error, and it is referred to as integral due to it rises with the time at the end of the step. Next is K_d that represents damping effects on the system, functioning to minimize overshoot and oscillations with K_p [6].

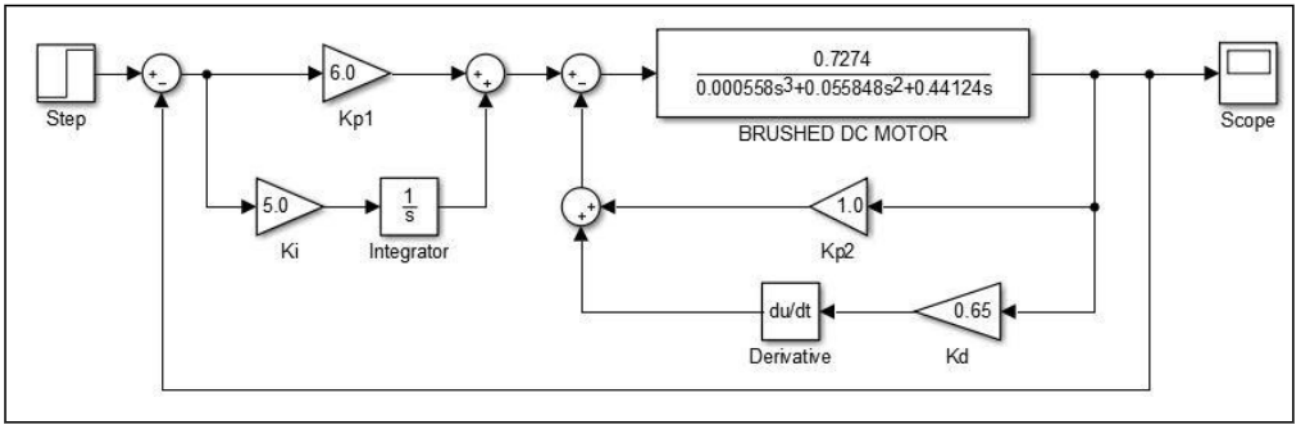

Figure 3. Block diagram of PI-PD controller in MATLAB/Simulink.

However, each of the gains will influence the system response in different ways. Based on the research carried [7], it stated that K_p will help in minimize the rise time and steady state error but increase the overshoot of the system. K_i will minimize the rise time as K_p but increase the overshoot and settling time. Lastly, K_d will have a small change in rise time,it can reduce overshoot and settling time.

Performance evaluation

To check the validity of the brushed DC motor that have been derived, comparison between brushed DC motor without controller and brushed DC motor with the presence of the PI-PD controller will be carried out with the help of trial-and-error method to optimize the controller's gains parameter. Thus, evaluation that will be conducted based on some characteristics that have been mentioned before in order to decide which brushed DC motor is best to use for accuracy and fast response relating to the position context.

Characteristics that important to evaluate are rise time, T_r, settling time, T_s, peak time, T_p, the percentage overshoot for each of the conditions of the motor, existence of controller or without the controller and lastly the steady state error, e_{ss}. A good system response is a system which have lower value in T_r where it refers to the amount of time it takes for a signal to shift from low value to high value and the percentages are usually between 10% and 90% of the step high or final value of the system.

Settling time or T_s where indicate the time elapsed between the application of an ideal instantaneous step input and the time where output of the system entered and stayed within a specified error band also should be lower. Furthermore,time need by the system response to reach the first peak of the overshoot is one of the important characteristics that needto focus on. Moreover, steady state error which the time it takes for the system response to reach back the final value and lastly is the overshoot of the response when the system exceeds its target.

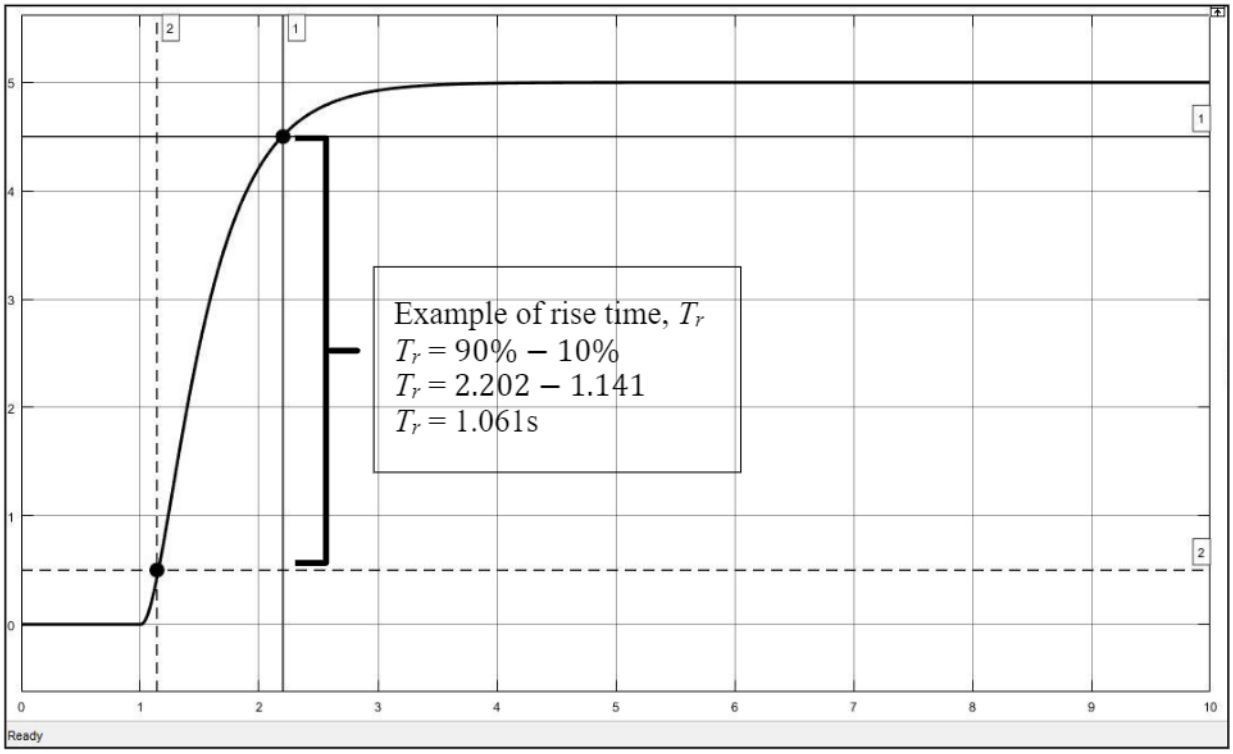

Figure 4. Example of result for brushed DC motor without controller from Simulink scope.

Based on Figure 4 above is an example from a system response of a brushed DC motor without using any controller. To get the system response parameters, a toolbar of cursor measurements in Simulink simulation, it will portray two sections of time. It will be used to get the T_r by undergoing some mathematical operation, which is a minus operation between the value of the second time and from the first time. Secondly, for T_s, this method can be done using only one value and time that portray is the time for settling time. It can be taken directly from the bilevel measurements toolbar for percentage overshoot characteristics, or it can be calculated manually. However, there will be some calculations involved to know the exact value that needs to be used before getting the value of time for each of the characteristics.

RESULTS AND DISCUSSION

Trial-and-Error tuning method

Gains' parameters from trial-and-error method which are proportional integral, K_p, integral gain, K_i and derivative gain, K_d can be tabulated as below. These parameters will be applied in the block diagram along with the transfer function based on type of controller used. Table 1 below is the result of trial-and-error tuning method that have been obtained.

Table 1. Trial-and-error tuning method.

Type of controllers	Gain's value		
	K_p	K_i	K_d
PI	6.0	5.0	-
PD	1.0	-	0.65

Simulink simulation result

Based on the simulation in the Simulink software, result that have been obtained between the combination of brushed DC motor with PI-PD controller and brushed DC motor without controller will be discussed. Step input or the final value

that used during the simulation is 5m. Figure 5 below shows the combination graph between brushed DC motor with the presence of PI-PD controller and brushed DC motor without any controller.

As we can see from the figure below, the performance of the brushed DC motor without using any controller are in stable condition. The stable performance which portrays by brushed DC motor without any controller achieved due to the precise derivation of the mathematical model that have been done in earlier stage before the simulation process. Then, to enhance the efficiency of the brushed DC motor in terms of the time response, PI-PD controller have been implemented. The performance of the brushed DC motor with PI-PD controller provides a fast response compared to the brushed DC motor which does not apply any controller based on the graph below.

The comparison between both brushed DC motor can be evaluated in terms of the transient response characteristics which are rise time, T_r, settling time, T_s, percentage overshoot and steady state error, $e_{ss.}$ which will be discussed on the next topic.

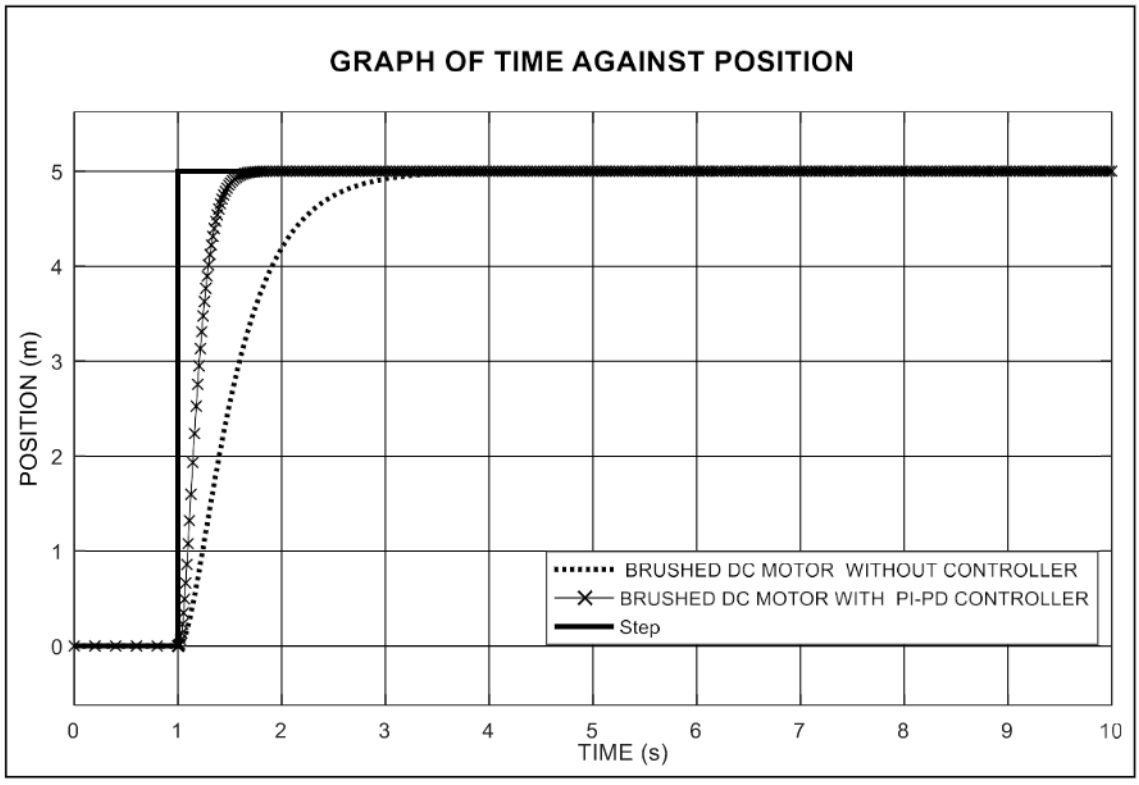

Figure 5. Combination graph of brushed DC motor without controller and brushed DC motor with PI-PD controller.

Transient response of brushed DC motor

Transient response for each brushed DC motor with PI-PD controller and brushed DC motor without controller may be calculated using the step response graph shown in Figure 5. These transients can be achieved by adding a step to the combination of two brushed DC motors, both with and without controllers. Due to the correct derivation of the mathematical model, the performances of brushed DC motor for both with and without controllers then will be compared and discussed based on the transient response characteristics. Table 2 below is the result of the transient response of both different brushed DC motor with and without controller.

Table 2. Transient response of brushed DC motor with and without controller.

Type of controllers	Transient response			
	T_r (s)	T_s (s)	% OS	SSE, $e_{ss.}$
Brushed DC motor without controller	1.061	3.054	0.503	0
Brushed DC motor with PI-PD controller	0.307	1.591	0.504	0

From the step response Simulink simulation of combination graph in Figure 5, and transient response result for different approach of brushed DC motor, it shows that the mathematical model of brushed DC motor that have been derived from the DC motor circuit is correct since the performance of the brushed DC motor without using any controllersis stable. Then to have a better and fast response, the brushed DC motor was combined with the PI-PD controller, thus brushed DC motor with the presence of PI-PD controller have a better performances and fast response compared to the brushed DC motor without any controller.

As shown in Table 2 above, brushed DC motor with PI-PD controller has the shortest rise time, T_r which are 0.307s while time required by system response from initial value of 10% to hit 90% of steady state response, brushed DC motor without using any controller has the longest time, 1.061s. Proposed brushed DC motor with controller has the shortest time of T_r due to the high value of proportional and integral gain which help in reducing the T_r characteristics.

For settling time, T_s which act as the time needed to reach and stay 2% of steady state value, again brushed DC motor with PI-PD controller required a short time to reach it compared to brushed DC motor without any controller which are 1.591s and 3.054s. This is due to the value of derivative gain that help to minimize the T_s characteristic.

Moreover, overshoot that defined as the system response that exceed its steady state value or final value, both brushed DC motor have the smallest value. Proposed brushed DC motor with proposed controller have slightly 0.001% difference than brushed DC motor that is not applied any controller, 0.504% and 0.503% and the system is still stable since the overshoot had occurred is below than 10%. Last characteristic that was evaluated is the steady state error, e_{ss}, where the time it takes for the system response to reach back the final value for both conditions of the brushed DC motor is zero. This is due to the precise method that have been implemented in mathematical model derivation of the brushed DC motor which contribute to the stable response for the both brushed DC motor with and without the PI-PD controller.

Therefore, after analyzing the graph of the Simulink simulation, it can be inferred that a correct mathematical model for brushed DC motor is crucial in order for the brushed DC motor to have a stable response even though the response is still in slow response. By consider the evaluation of brushed DC motor with PI-PD controller and brushed DC motor without controller in transient response aspects, the brushed DC motor with PI-PD controller provide an outperform performances as it required shortest time from initial value of 10% to hit 90% of steady state response, to reach and stayin 2% of steady state response, small value of overshoot which in the range of 10% that will make the system to be stableand there is no steady state as the system is in stable condition.

CONCLUSION

A mathematical model of brushed DC motor has been developed based on the circuit of brushed DC motor which consist of electrical and mechanical part by implementing some method such as Kirchoff's voltage law, Laplace transform and other mathematical methods.

Based on the mathematical model of brushed DC motor that have been generated, a simulation by using Simulink software have been conducted to verify the functionality and accuracy of the mathematical model that have been derived. The simulation involves two conditions of the brushed DC motor which are brushed DC motor with PI-PD controller and brushed DC motor without any controller.

From the simulation that have been made, both conditions of the brushed DC motor portray a stable response. This indicates that the mathematical model that have been derived is correct and accurate especially a constant response that provided by the brushed DC motor without any controller. For the purpose of enhancing the performance of brushed DC motor, PI-PD controller was implemented. To optimize the gains' parameter of proposed controller, trial-and-error method was used.

As for the brushed DC motor with PI-PD controller, it provides a better performance and fast response compared to the brushed DC motor only. An evaluation has been made for both of these brushed DC motor in terms of the transient response aspects. Brushed DC motor with proposed controller shows a faster rise time, T_r than brushed DC motor without controller which is 0.307s. Then, the time taken for the response to stay in 2% of the steady state, T_s also shorter than brushed DC motor without controller, 1.591s.

Thus, it can be concluded that the main point to have a good performance of brushed DC motor is a precise derivation for mathematical model of brushed DC motor itself. A correct mathematical model will influence the response of the brushed DC motor. Then, to enhance the performance in fast response aspects, controllers can be implemented.

ACKNOWLEDGEMENT

The authors would like to thank Universiti Malaysia Pahang for providing financial support under Post Graduate Research Scheme (PGRS) (Grant No. PGRS210365) and Faculty of Manufacturing and Mechatronic Engineering Technology, Universiti Malaysia Pahang for laboratory facilities.

REFERENCES

[1] A. A. A. Emhemed and R. Bin Mamat. "Modelling and simulation for Industrial DC Motor using Intelligent control," Procedia Eng., vol. 41, no. Iris, pp. 420–425, 2012.

[2] K. Shrivastava and P. M. D. Pawar. "A review on types of dc motors and the necessity of starter for its speed

regulation," Int. J. Adv. Res. Comput. Commun. Eng., vol. 5, no. 4, pp. 61–63, 2016.

[3] CRBTech. (2016). Advantages and Disadvantages of Prototype [Online]. Available: http://crbtech.in/CAD-CAMTraining/advantages-disadvantages-prototype/.

[4] J. Kimbrell. (2016). The DC Motor Advantage [Online]. Available: https://www.processingmagazine.com/pumps-motors-drives/article/15586862/the-dc-motor-advantage.

[5] M. Steinbuch, R. Huisman, D. A. F. Trucks, and F. Veldpaus. (2004). Tuning of PID-Type Controllers: Literature Overview [Online]. Available: https://pure.tue.nl/ws/files/4286492/625529.pdf.

[6] D. Collins. (2016). What are PID gains and feed-forward gains? [Online]. Available: https://www.motioncontroltips.com/faq-what-are-pid-gains-and-feed-forward-gains/.

[7] Jenkins. (2014). Tuning for PID Controllers [Online]. Available: http://faculty.mercer.edu/jenkins_he/documents/TuningforPIDControllers.pdf.