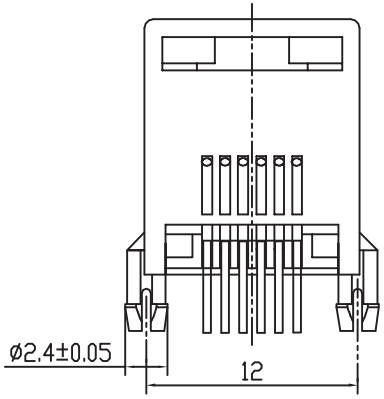

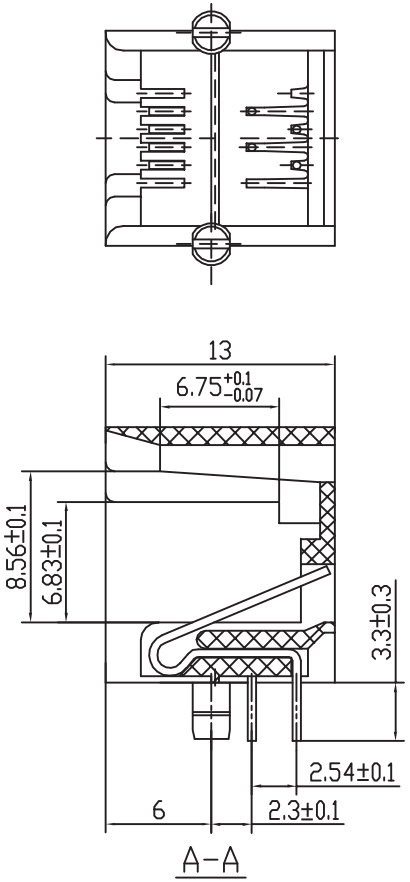

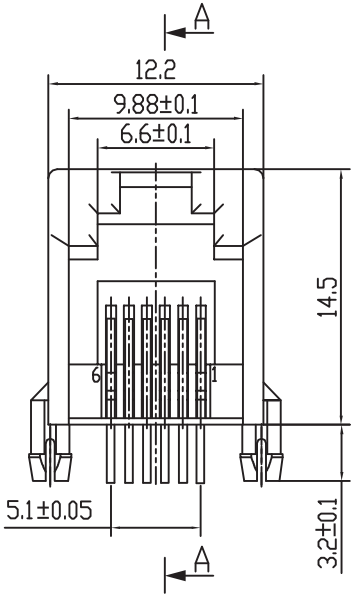

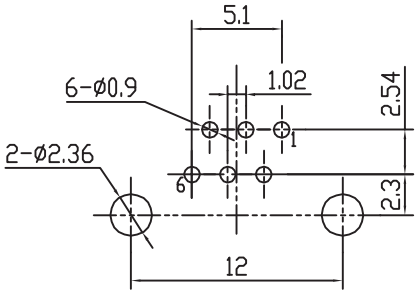

PCB LAYOUT - COMPONENT VIEW

TECHNICAL CHARACTERISTICS

MATERIAL
INSULATOR MATERIAL: PBT
FLAMMABILITY RATING: UL94-V0
COLOR: BLACK
CONTACT MATERIAL: COPPER ALLOY
CONTACT TYPE: STAMPED
CONTACT PLATING: GOLD
QUALITY CLASS: 500 MATING CYCLES

ENVIRONMENTAL
OPERATING TEMPERATURE: –40 °C UP TO 85 °C
COMPLIANCE: LEAD FREE AND ROHS

ELECTRICAL
CURRENT RATING: 1.5 A
WORKING VOLTAGE: 120 VAC
INSULATION RESISTANCE: >500 MOHM
DIELECTRIC WITHSTANDING VOLTAGE: 1 000 VAC/MIN
CONTACT RESISTANCE: 20 mOHM MAX

STANDARD
CERTIFIED: E324776

SOLDERING
JEDEC LEAD FREE WAVE SOLDERING PROCESS

PACKAGING
TRAY

RoHS Compliant

REV	DATE	FILE	BY
G			
F			
E	30-JUL-15	SHIELDING	AK
D	28-JUL-14	GENERAL UPDATE	AS
C	06-JUN-14	MATERIAL COLOR	AS
B	03-JAN-14	UL & TEMP UPDATE	QL
A	02-NOV-08	PDF	CH

PROJECTION:

APPROVAL: JTs

GENERAL TOLERANCE
.X = +/_ 0.2
.XX = +/_ 0.15

UNIT: MM
SCALE:
SHEET: 1/2
DRAW:

WÜRTH ELEKTRONIK

DESCRIPTION: HORIZONTAL PLASTIC 6P6C MODULAR JACK TAP UP

WERI PART NO: 615 006 138 421

SIZE **A4**

Cautions and Warnings:

This electronic component is designed and developed with the intention for use in general electronics equipments.
Before incorporating the components into any equipments in the field such as aerospace, aviation, nuclear control, submarine, transportation, (automotive control, train control, ship control), transportation signal, disaster prevention, medical, public information network etc. where higher safety and reliability are especially required or if there is possibility of direct damage or injury to human body, Wurth Elektronik must be asked for a written approval.
In addition, even electronic component in general electronic equipments, when used in electrical circuits that require high safety, reliability functions or performance, the sufficient reliability evaluation-check for the safety must be performed before by the user before usage.

RoHS Compliant

REV	DATE	FILE	BY
G			
F			
E			
D			
C			
B			
A	10-SEP-14	PDF	QL

PROJECTION:

APPROVAL: JC

GENERAL TOLERANCE

UNIT: MM

SCALE:

SHEET: 2/2

DRAW: QL

WÜRTH ELEKTRONIK

DESCRIPTION: DISCLAIMER

WERI PART NO: DISCLAIMER

SIZE

A4