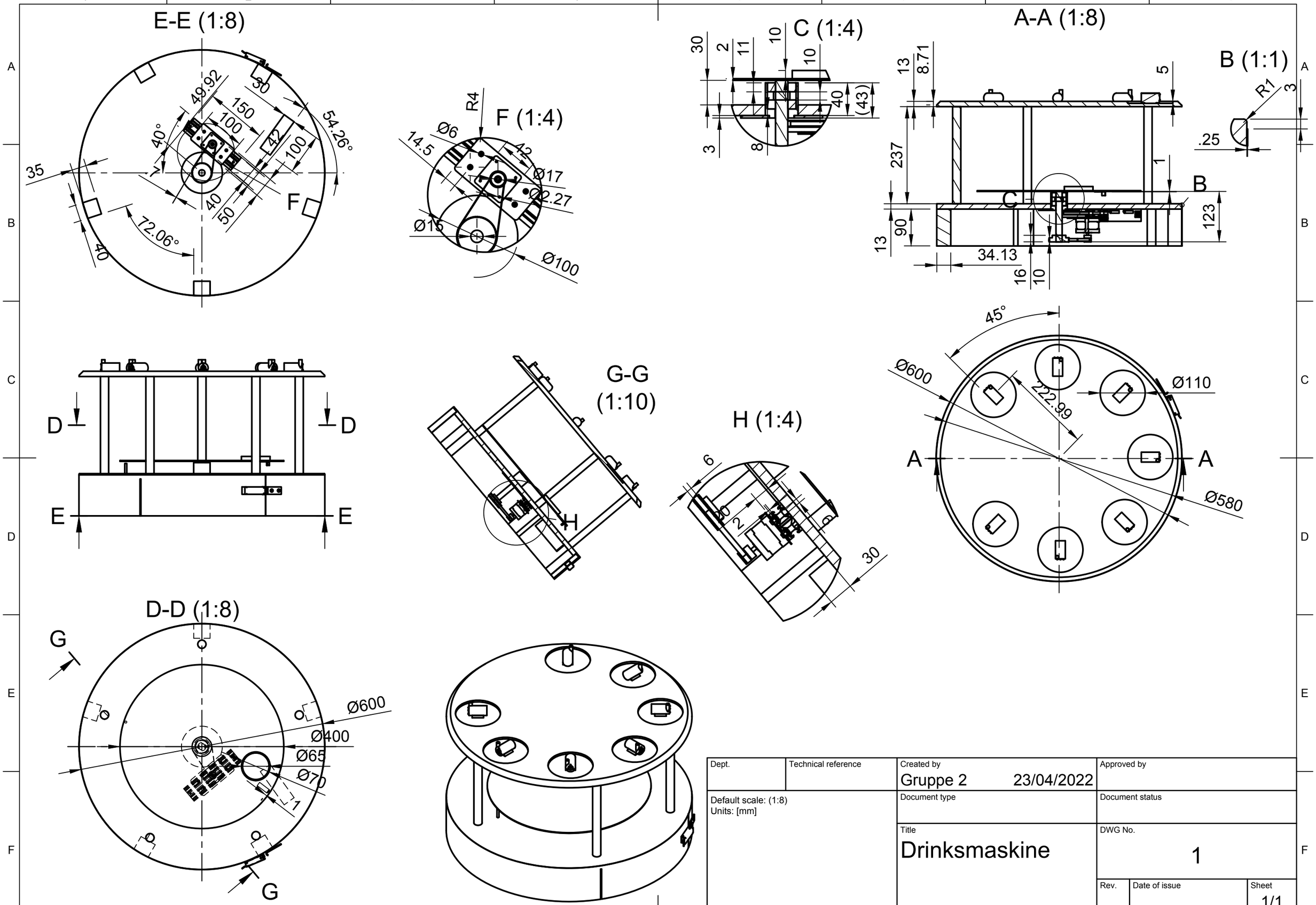

Dept.	Technical reference	Created by Gruppe 2 23/04/2022	Approved by
Default scale: (1:8) Units: [mm]		Document type	Document status
		Title Drinksmaskine	DWG No. 1
			Rev. / Date of issue / Sheet 1/1