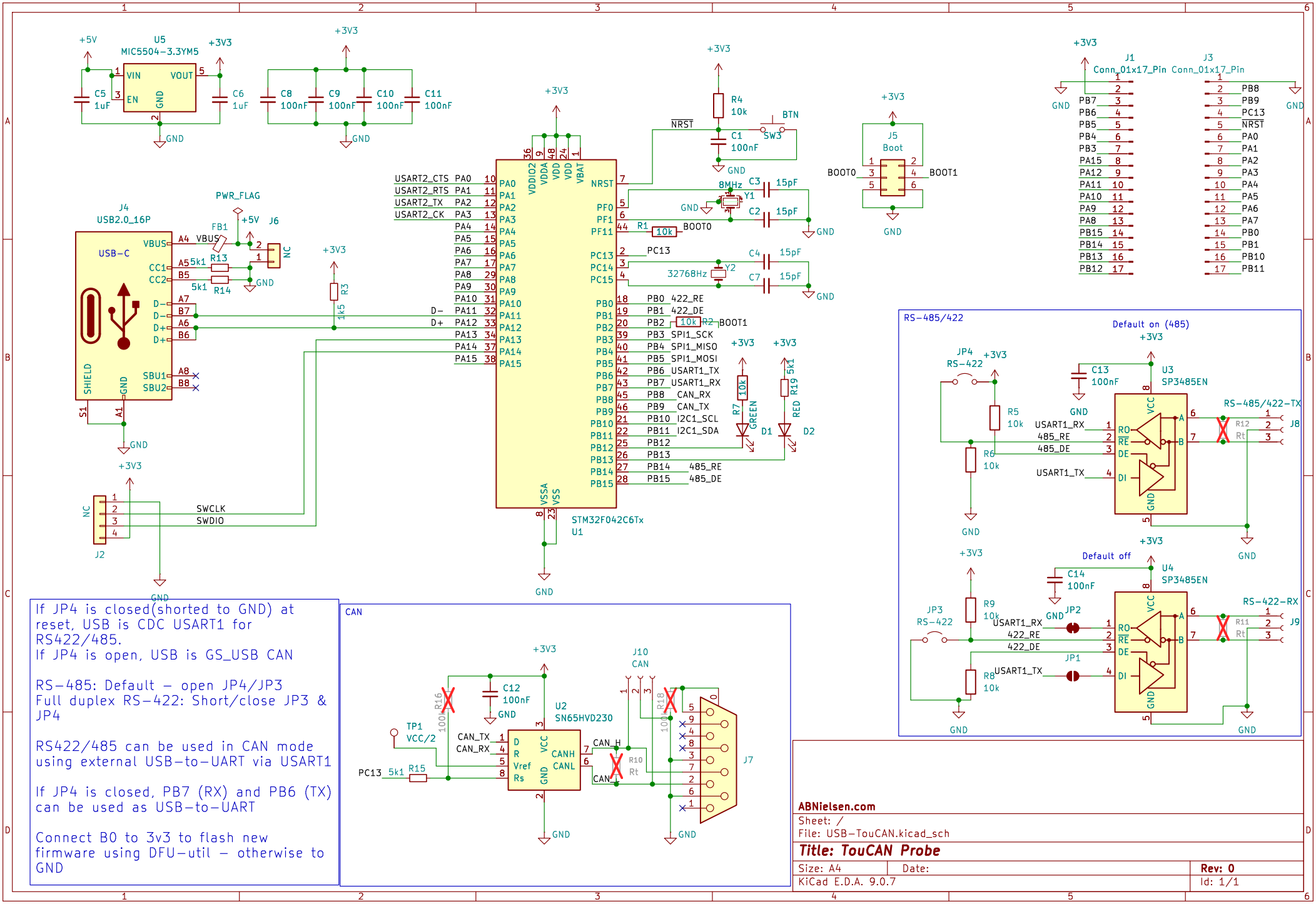

If JP4 is closed(shorted to GND) at reset, USB is CDC USART1 for RS422/485.
If JP4 is open, USB is GS_USB CAN

RS-485: Default - open JP4/JP3
Full duplex RS-422: Short/close JP3 & JP4

RS422/485 can be used in CAN mode using external USB-to-UART via USART1

If JP4 is closed, PB7 (RX) and PB6 (TX) can be used as USB-to-UART

Connect B0 to 3v3 to flash new firmware using DFU-util - otherwise to GND

ABNielsen.com

Sheet: /
File: USB-TouCAN.kicad_sch

Title: TouCAN Probe

Size: A4	Date:	Rev: 0
KiCad E.D.A. 9.0.7		Id: 1/1