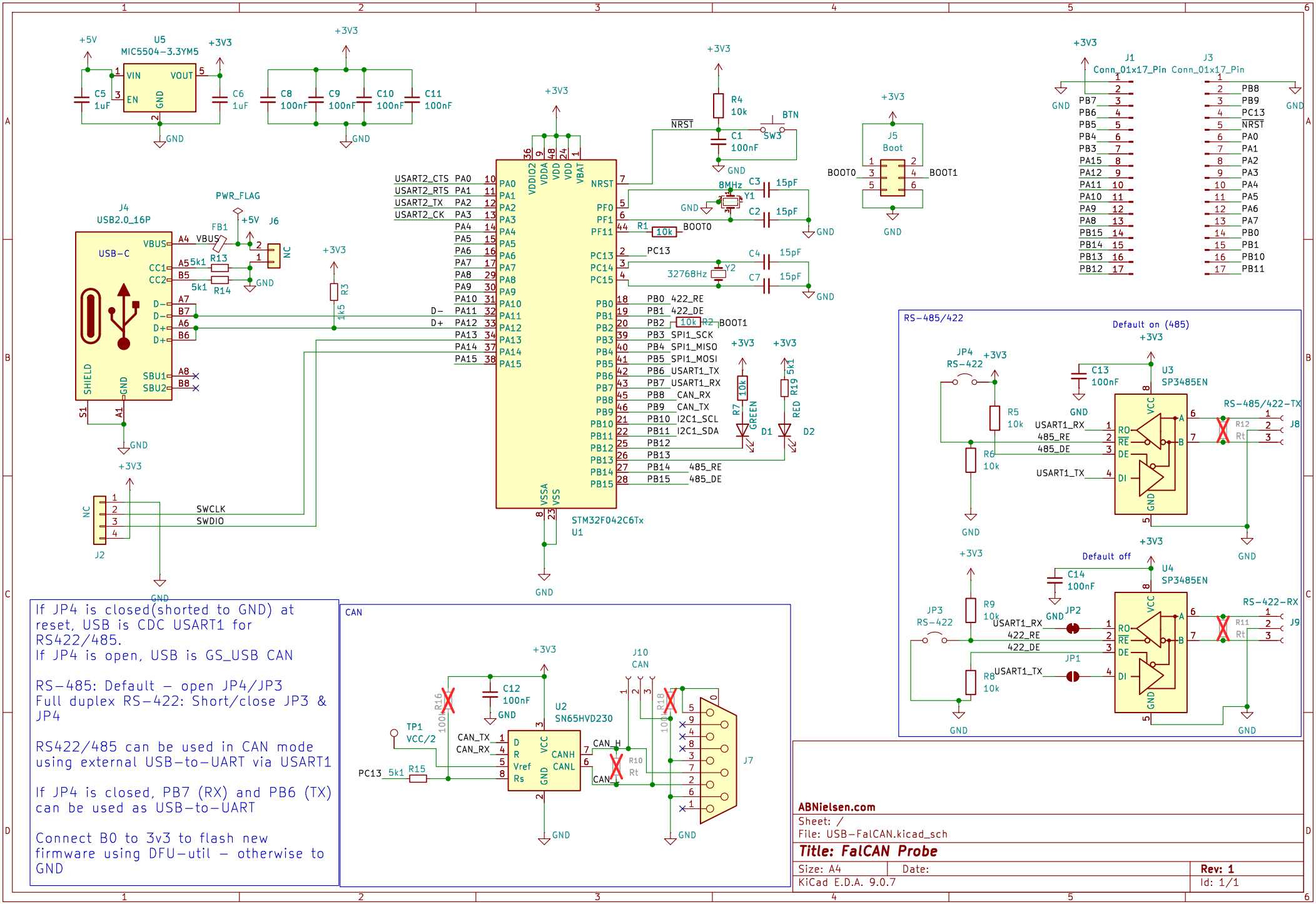
U5
MIC5504-3.3YM5
VIN
VOUT
EN
GND
C5 1uF
C6 1uF
C8 100nF
C9 100nF
C10 100nF
C11 100nF
+5V
+3V3
GND
J4
USB2.0_16P
USB-C
VBUS
CC1
CC2
D-
D+
SHIELD
SBU1
SBU2
PWR_FLAG
FB1
J6
NC
R13 5k1
R14 5k1
R3 1k5
S1
J2
SWCLK
SWDIO
USART2_CTS
USART2_RTS
USART2_TX
USART2_CK
STM32F042C6Tx
U1
NRST
BTN
SW3
R4 10k
C1 100nF
8MHz
Y1
C3 15pF
C2 15pF
R1 10k
BOOT0
PC13
32768Hz
Y2
C4 15pF
C7 15pF
R2 10k
BOOT1
PB0 422_RE
PB1 422_DE
PB3 SPI1_SCK
PB4 SPI1_MISO
PB5 SPI1_MOSI
PB6 USART1_TX
PB7 USART1_RX
PB8 CAN_RX
PB9 CAN_TX
PB10 I2C1_SCL
PB11 I2C1_SDA
PB14 485_RE
PB15 485_DE
R7 10k
GREEN
D1
R19 5k1
RED
D2
J5
Boot
J1
Conn_01x17_Pin
J3
Conn_01x17_Pin
RS-485/422
Default on (485)
JP4
RS-422
C13 100nF
U3
SP3485EN
R5 10k
R6 10k
USART1_RX
485_RE
485_DE
USART1_TX
RS-485/422-TX
J8
Default off
C14 100nF
U4
SP3485EN
JP3
RS-422
R9 10k
R8 10k
JP2
JP1
422_RE
422_DE
RS-422-RX
J9
CAN
U2
SN65HVD230
C12 100nF
R16 100
TP1
VCC/2
CAN_TX
CAN_RX
PC13
R15 5k1
CAN_H
CAN_L
R10 Rt
R18 100
J10
CAN
J7
If JP4 is closed(shorted to GND) at reset, USB is CDC USART1 for RS422/485.
If JP4 is open, USB is GS_USB CAN
RS-485: Default - open JP4/JP3
Full duplex RS-422: Short/close JP3 & JP4
RS422/485 can be used in CAN mode using external USB-to-UART via USART1
If JP4 is closed, PB7 (RX) and PB6 (TX) can be used as USB-to-UART
Connect B0 to 3v3 to flash new firmware using DFU-util - otherwise to GND
ABNielsen.com
Sheet: /
File: USB-FalCAN.kicad_sch
Title: FalCAN Probe
Size: A4
Date:
Rev: 1
KiCad E.D.A. 9.0.7
Id: 1/1