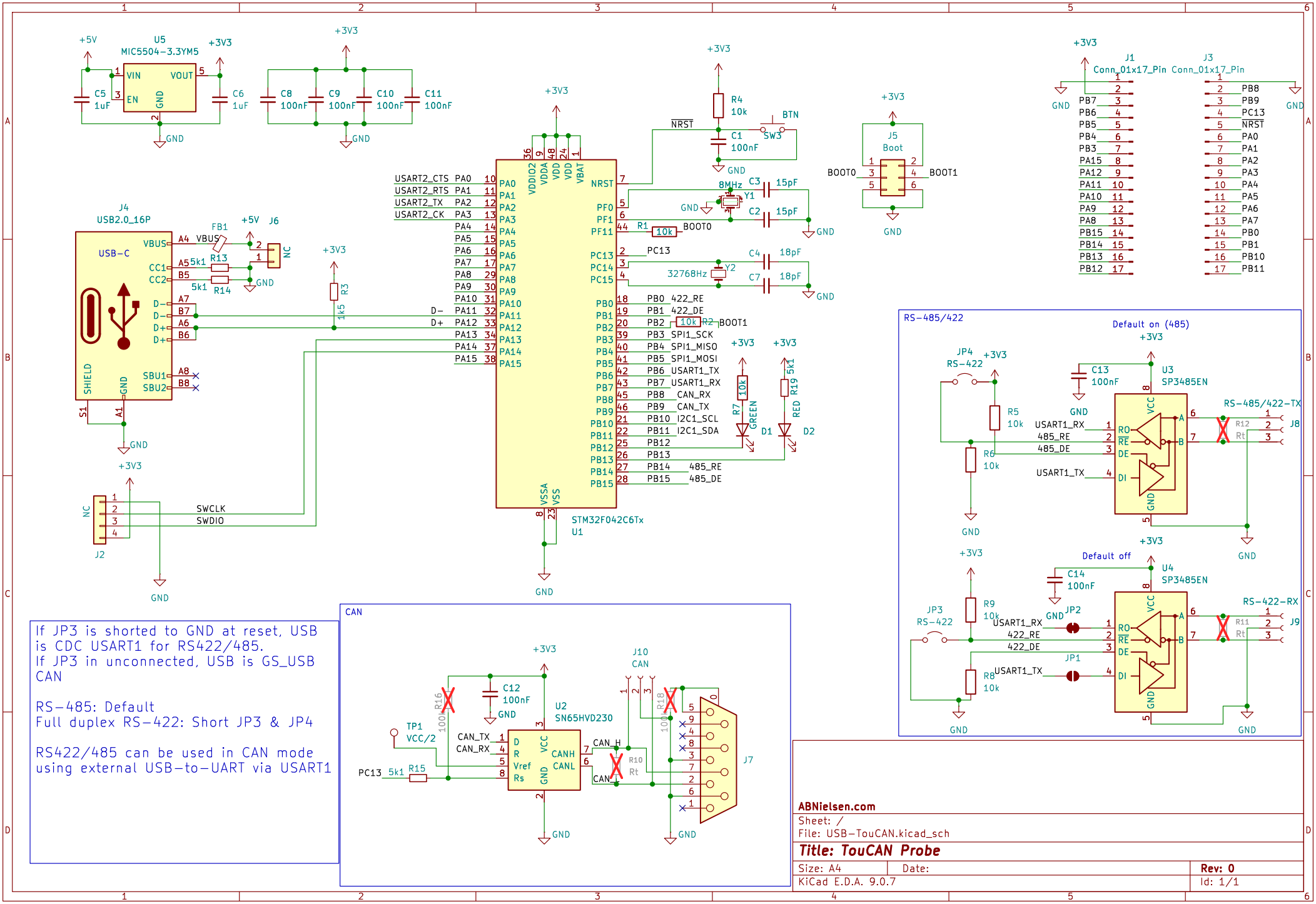
U5
MIC5504-3.3YM5
VIN
VOUT
EN
GND
C5 1uF
C6 1uF
C8 100nF
C9 100nF
C10 100nF
C11 100nF
+5V
+3V3
GND
J4
USB2.0_16P
USB-C
VBUS
CC1
CC2
D-
D+
SHIELD
SBU1
SBU2
FB1
R13 5k1
R14 5k1
J6
NC
R3 1k5
J2
SWCLK
SWDIO
STM32F042C6Tx
U1
VDDIO2
VDDA
VDD
VBAT
VSSA
VSS
NRST
PA0
PA1
PA2
PA3
PA4
PA5
PA6
PA7
PA8
PA9
PA10
PA11
PA12
PA13
PA14
PA15
PF0
PF1
PF11
PC13
PC14
PC15
PB0
PB1
PB2
PB3
PB4
PB5
PB6
PB7
PB8
PB9
PB10
PB11
PB12
PB13
PB14
PB15
USART2_CTS
USART2_RTS
USART2_TX
USART2_CK
422_RE
422_DE
BOOT0
BOOT1
SPI1_SCK
SPI1_MISO
SPI1_MOSI
USART1_TX
USART1_RX
CAN_RX
CAN_TX
I2C1_SCL
I2C1_SDA
485_RE
485_DE
R4 10k
C1 100nF
BTN
SW3
8MHz
Y1
C3 15pF
C2 15pF
R1 10k
32768Hz
Y2
C4 18pF
C7 18pF
R2 10k
R7 10k
GREEN
D1
R19 5k1
RED
D2
J5
Boot
J1
Conn_01x17_Pin
J3
Conn_01x17_Pin
RS-485/422
Default on (485)
JP4
RS-422
C13 100nF
U3
SP3485EN
R5 10k
R6 10k
RS-485/422-TX
J8
R12
Rt
Default off
C14 100nF
U4
SP3485EN
JP3
RS-422
R9 10k
R8 10k
JP2
JP1
RS-422-RX
J9
R11
CAN
U2
SN65HVD230
C12 100nF
R16 100
TP1
VCC/2
PC13
5k1
R15
CAN_TX
CAN_RX
CAN_H
CAN_L
R10
Rt
R18 100
J10
CAN
J7
If JP3 is shorted to GND at reset, USB is CDC USART1 for RS422/485.
If JP3 in unconnected, USB is GS_USB CAN
RS-485: Default
Full duplex RS-422: Short JP3 & JP4
RS422/485 can be used in CAN mode using external USB-to-UART via USART1
ABNielsen.com
Sheet: /
File: USB-TouCAN.kicad_sch
Title: TouCAN Probe
Size: A4
Date:
Rev: 0
KiCad E.D.A. 9.0.7
Id: 1/1