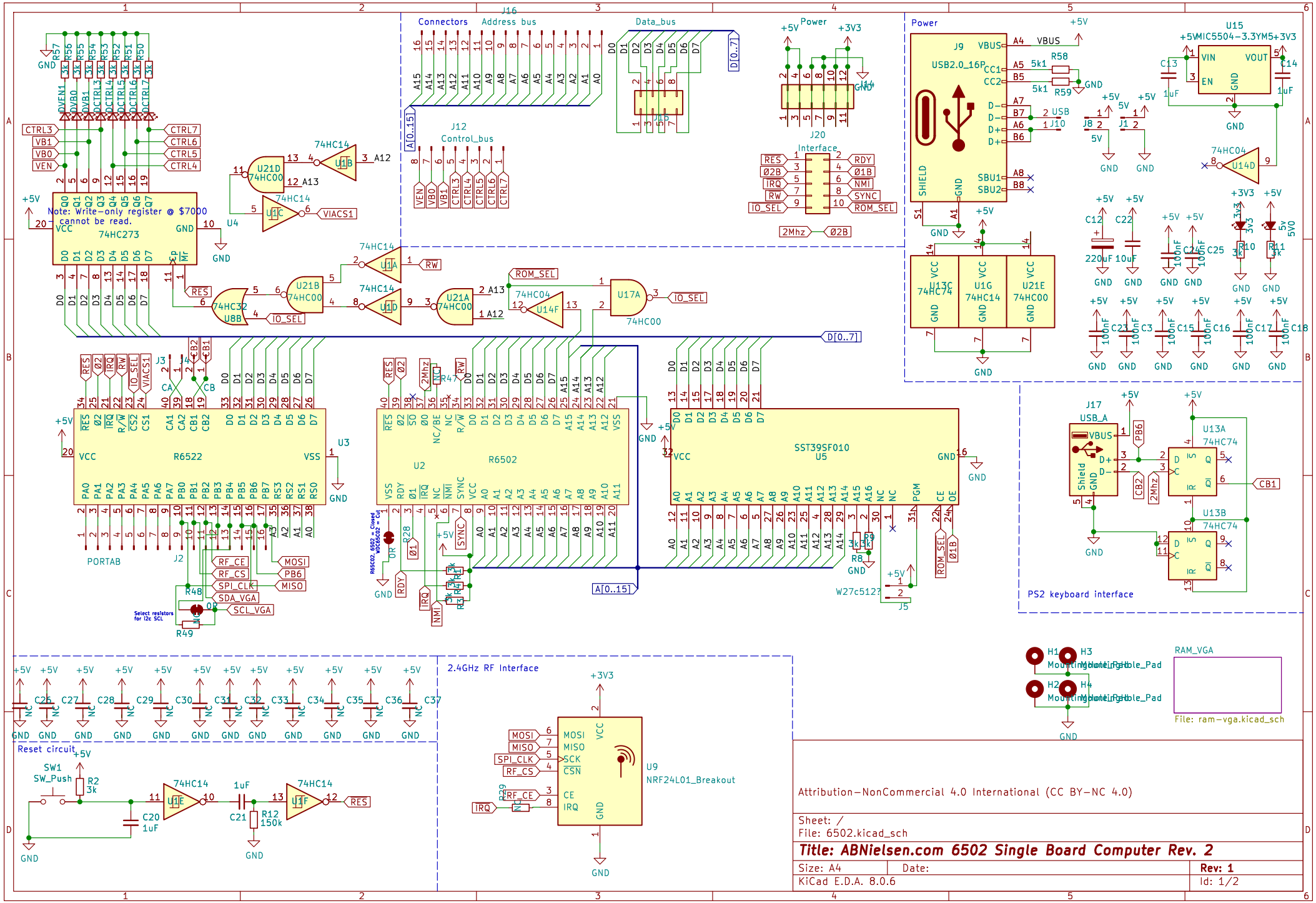
Connectors
Address bus
Data_bus
Power
Control_bus
Interface
Note: Write-only register @ $7000 cannot be read.
74HC273
R6522
R6502
SST39SF010
PORTAB
Select resistors for I2c SCL
Reset circuit
2.4GHz RF Interface
NRF24L01_Breakout
USB2.0_16P
MIC5504-3.3YM5
PS2 keyboard interface
RAM_VGA
File: ram-vga.kicad_sch
Attribution-NonCommercial 4.0 International (CC BY-NC 4.0)
Sheet: /
File: 6502.kicad_sch
Title: ABNielsen.com 6502 Single Board Computer Rev. 2
Size: A4
Date:
Rev: 1
KiCad E.D.A. 8.0.6
Id: 1/2

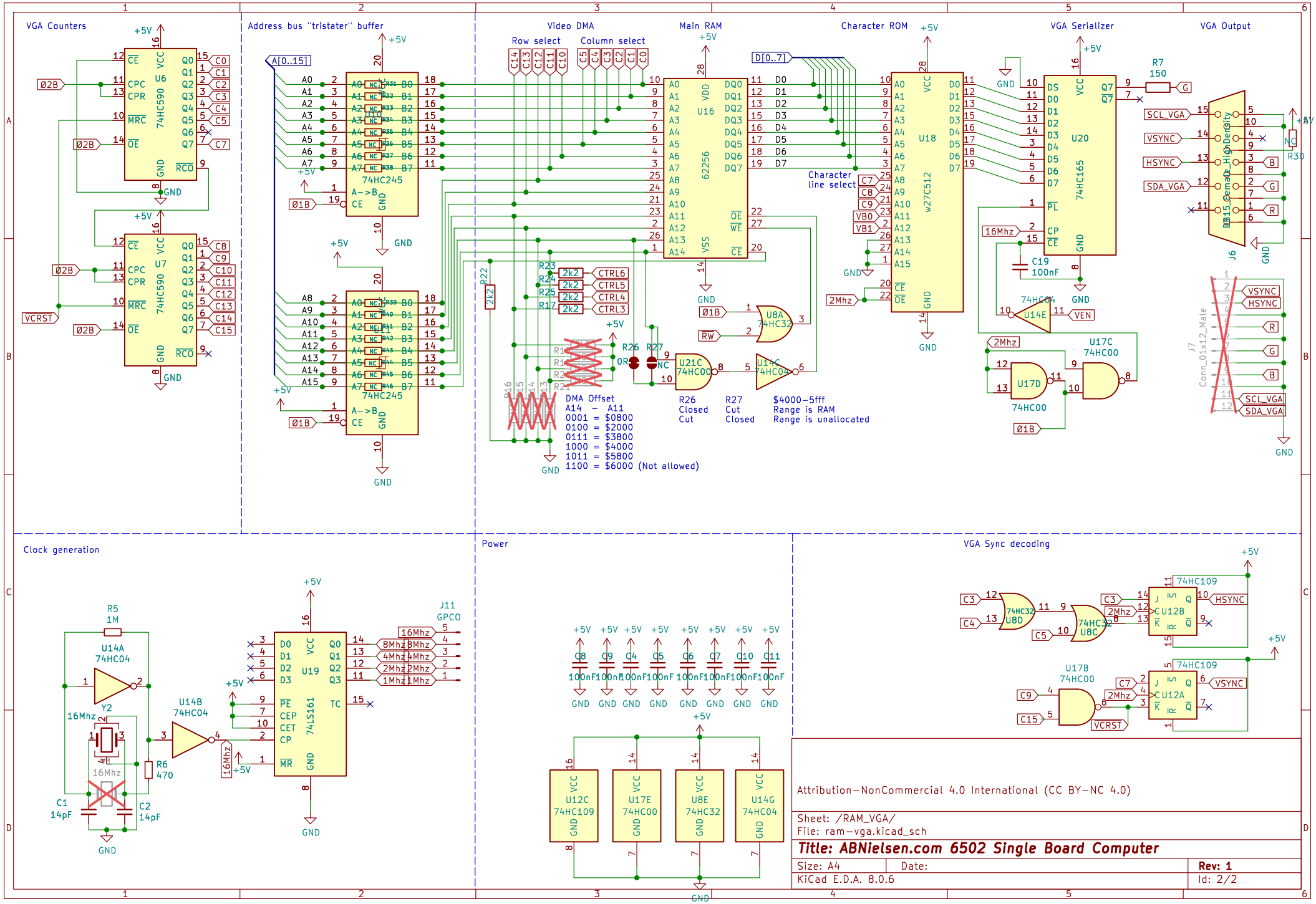
VGA Counters
Address bus "tristater" buffer
Video DMA
Row select
Column select
Main RAM
Character ROM
VGA Serializer
VGA Output
Character line select
DMA Offset
A14 – A11
0001 = $0800
0100 = $2000
0111 = $3800
1000 = $4000
1011 = $5800
1100 = $6000 (Not allowed)
R26 Closed Cut
R27 Cut Closed
$4000–5fff Range is RAM Range is unallocated
Clock generation
Power
VGA Sync decoding
Attribution–NonCommercial 4.0 International (CC BY–NC 4.0)
Sheet: /RAM_VGA/
File: ram–vga.kicad_sch
Title: ABNielsen.com 6502 Single Board Computer
Size: A4
Date:
Rev: 1
KiCad E.D.A. 8.0.6
Id: 2/2