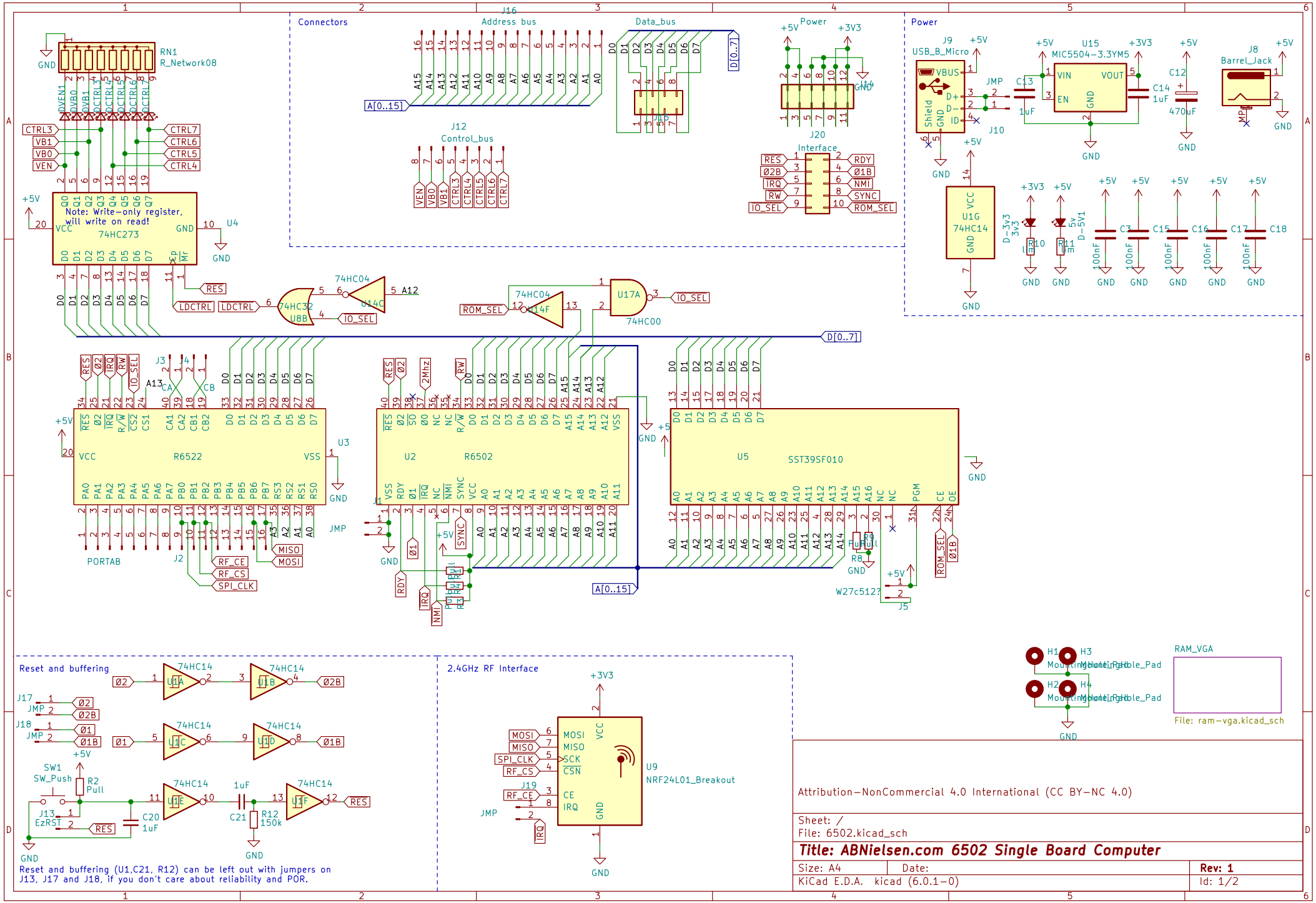
Connectors
Power
Reset and buffering
2.4GHz RF Interface
Note: Write-only register, will write on read!
74HC273
R6522
R6502
SST39SF010
NRF24L01_Breakout
Reset and buffering (U1,C21, R12) can be left out with jumpers on J13, J17 and J18, if you don't care about reliability and POR.
Attribution-NonCommercial 4.0 International (CC BY-NC 4.0)
Sheet: /
File: 6502.kicad_sch
Title: ABNielsen.com 6502 Single Board Computer
Size: A4
Date:
Rev: 1
KiCad E.D.A. kicad (6.0.1-0)
Id: 1/2
RAM_VGA
File: ram-vga.kicad_sch

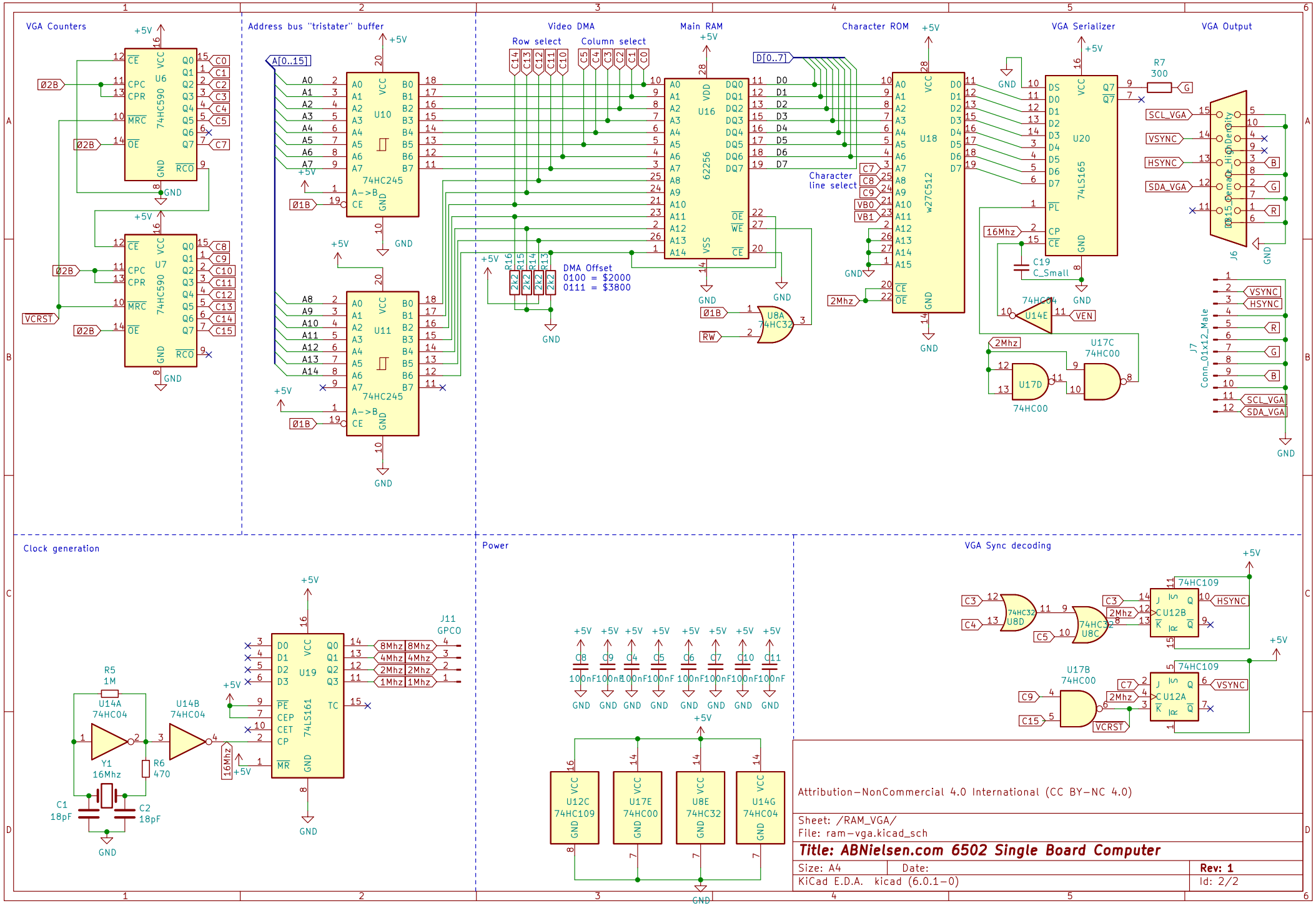
VGA Counters
Address bus "tristater" buffer
Video DMA
Row select
Column select
Main RAM
Character ROM
VGA Serializer
VGA Output
Character line select
DMA Offset
0100 = $2000
0111 = $3800
Clock generation
Power
VGA Sync decoding
U6 74HC590
U7 74HC590
U10 74HC245
U11 74HC245
U16 62256
U18 w27C512
U20 74LS165
U19 74LS161
U8A 74HC32
U8D 74HC32
U8C 74HC32
U14A 74HC04
U14B 74HC04
U14E 74HC04
U17C 74HC00
U17D 74HC00
U17B 74HC00
U12B 74HC109
U12A 74HC109
U12C 74HC109
U17E 74HC00
U8E 74HC32
U14G 74HC04
J6 DB15_Female_HighDensity
J7 Conn_01x12_Male
J11 GPCO
R7 300
R5 1M
R6 470
Y1 16Mhz
C1 18pF
C2 18pF
C19 C_Small
Attribution-NonCommercial 4.0 International (CC BY-NC 4.0)
Sheet: /RAM_VGA/
File: ram-vga.kicad_sch
Title: ABNielsen.com 6502 Single Board Computer
Size: A4
Date:
Rev: 1
KiCad E.D.A. kicad (6.0.1-0)
Id: 2/2