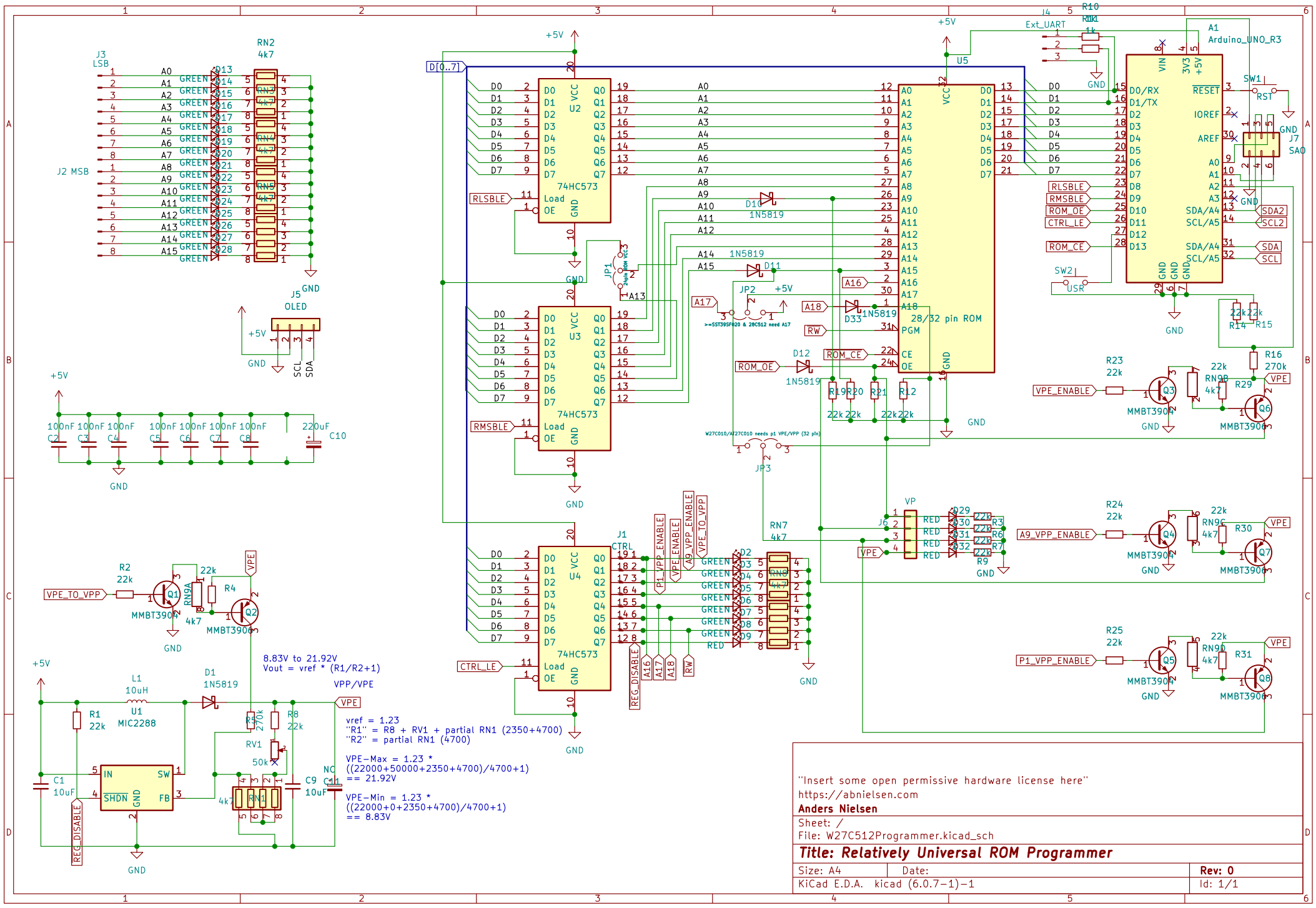
J3 LSB
J2 MSB
RN2 4k7
J5 OLED
SCL
SDA
+5V
GND
100nF C2 C3 C4 C5 C6 C7 C8
220uF C10
D[0..7]
U2 74HC573
U3 74HC573
U4 74HC573
RLSBLE
RMSBLE
CTRL_LE
J1 CTRL
P1_VPP_ENABLE
VPE_ENABLE
A9_VPP_ENABLE
VPE_TO_VPP
REG_DISABLE
D10 1N5819
D11 1N5819
D33 1N5819
D12 1N5819
JP1 2pin ROM VCC
JP2
JP3
>=SST39SF020 & 28C512 need A17
W27C010/A27C010 needs p1 VPE/VPP (32 pin)
U5 28/32 pin ROM
ROM_OE
ROM_CE
RW
A16
A17
A18
VP
J6
RN7 4k7
RN8 4k7
Ext_UART
J4
R10 1k
R11 1k
A1 Arduino_UNO_R3
SW1 RST
SW2 USR
J7 SAO
SDA2
SCL2
SDA
SCL
R14 22k
R15 22k
R16 270k
R23 22k
R24 22k
R25 22k
RN9A 4k7
RN9B 4k7
RN9C 4k7
RN9D 4k7
Q1 MMBT3904
Q2 MMBT3906
Q3 MMBT3904
Q4 MMBT3904
Q5 MMBT3904
Q6 MMBT3906
Q7 MMBT3906
Q8 MMBT3906
R2 22k
R4 22k
R29 22k
R30 22k
R31 22k
L1 10uH
D1 1N5819
U1 MIC2288
R1 22k
R3 270k
R8 22k
RV1 50k
RN1 4k7
C1 10uF
C9 10uF
C11 NC
8.83V to 21.92V
Vout = vref * (R1/R2+1)
VPP/VPE
vref = 1.23
"R1" = R8 + RV1 + partial RN1 (2350+4700)
"R2" = partial RN1 (4700)
VPE-Max = 1.23 * ((22000+50000+2350+4700)/4700+1) == 21.92V
VPE-Min = 1.23 * ((22000+0+2350+4700)/4700+1) == 8.83V
"Insert some open permissive hardware license here"
https://abnielsen.com
Anders Nielsen
Sheet: /
File: W27C512Programmer.kicad_sch
Title: Relatively Universal ROM Programmer
Size: A4
Date:
Rev: 0
KiCad E.D.A. kicad (6.0.7-1)-1
Id: 1/1