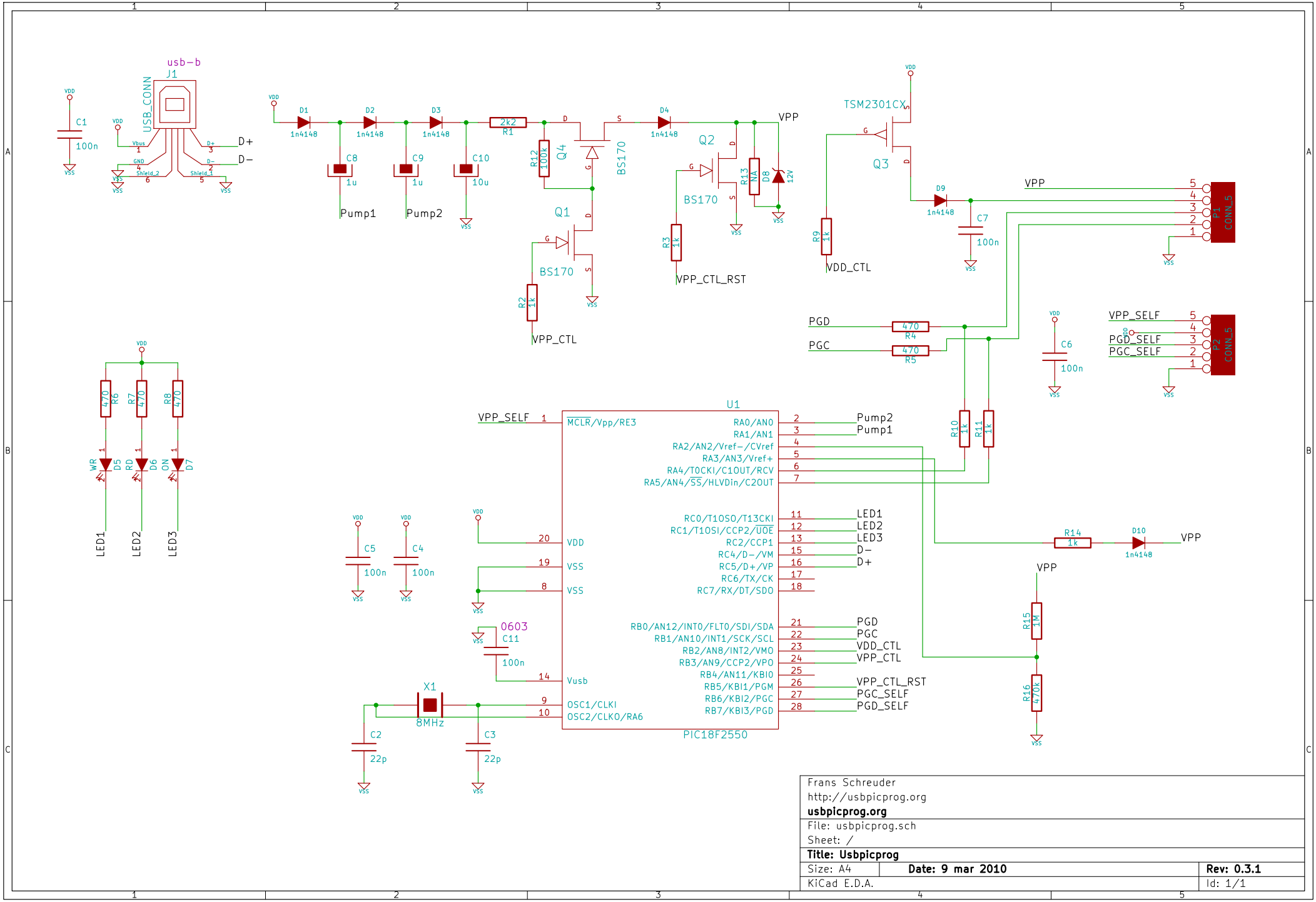

Frans Schreuder
http://usbpicprog.org
usbpicprog.org

File: usbpicprog.sch
Sheet: /

Title: Usbpicprog

Size: A4	**Date: 9 mar 2010**	**Rev: 0.3.1**
KiCad E.D.A.		Id: 1/1