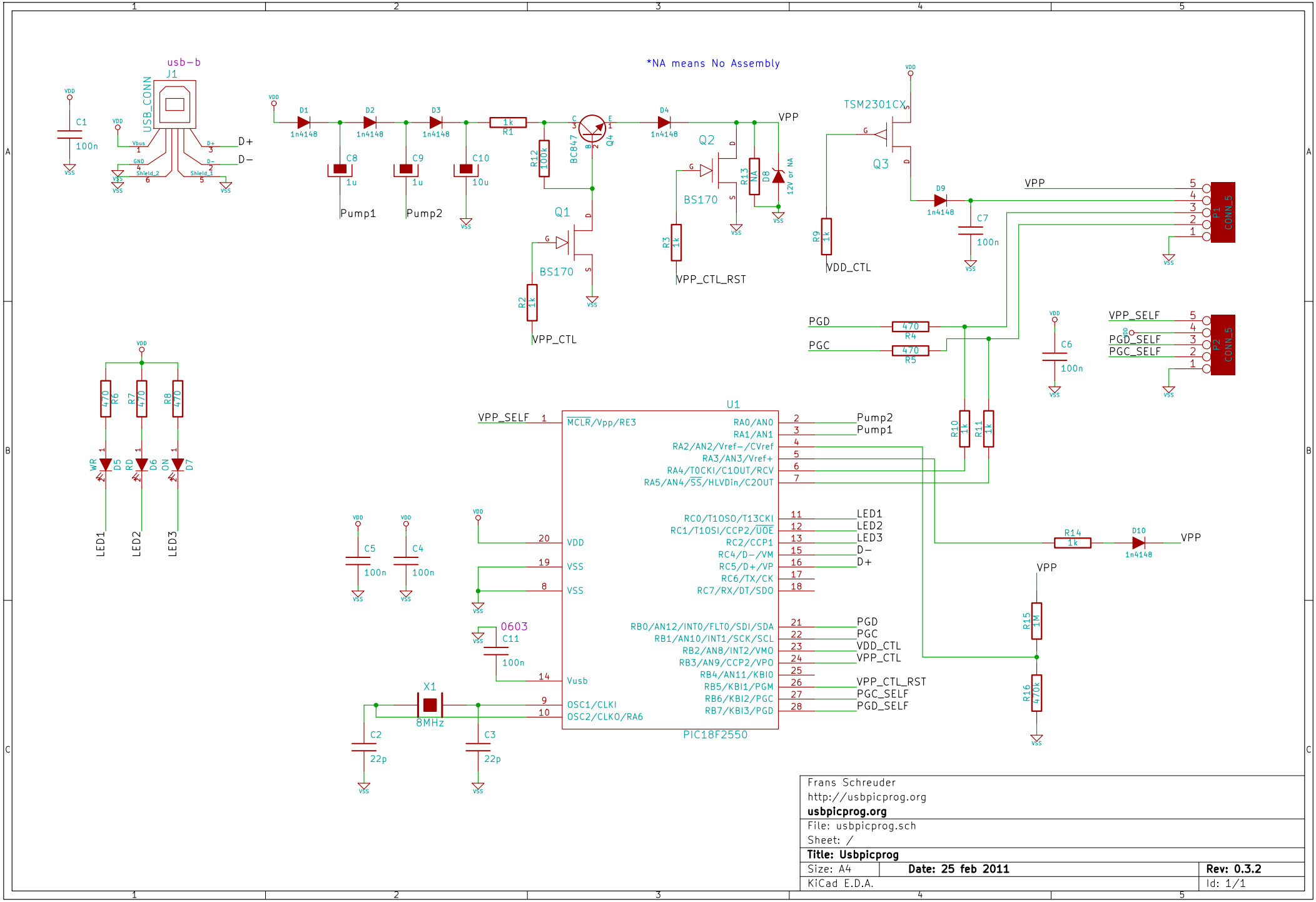

Frans Schreuder
http://usbpicprog.org
usbpicprog.org

File: usbpicprog.sch
Sheet: /

Title: Usbpicprog

Size: A4	**Date: 25 feb 2011**	**Rev: 0.3.2**
KiCad E.D.A.		Id: 1/1