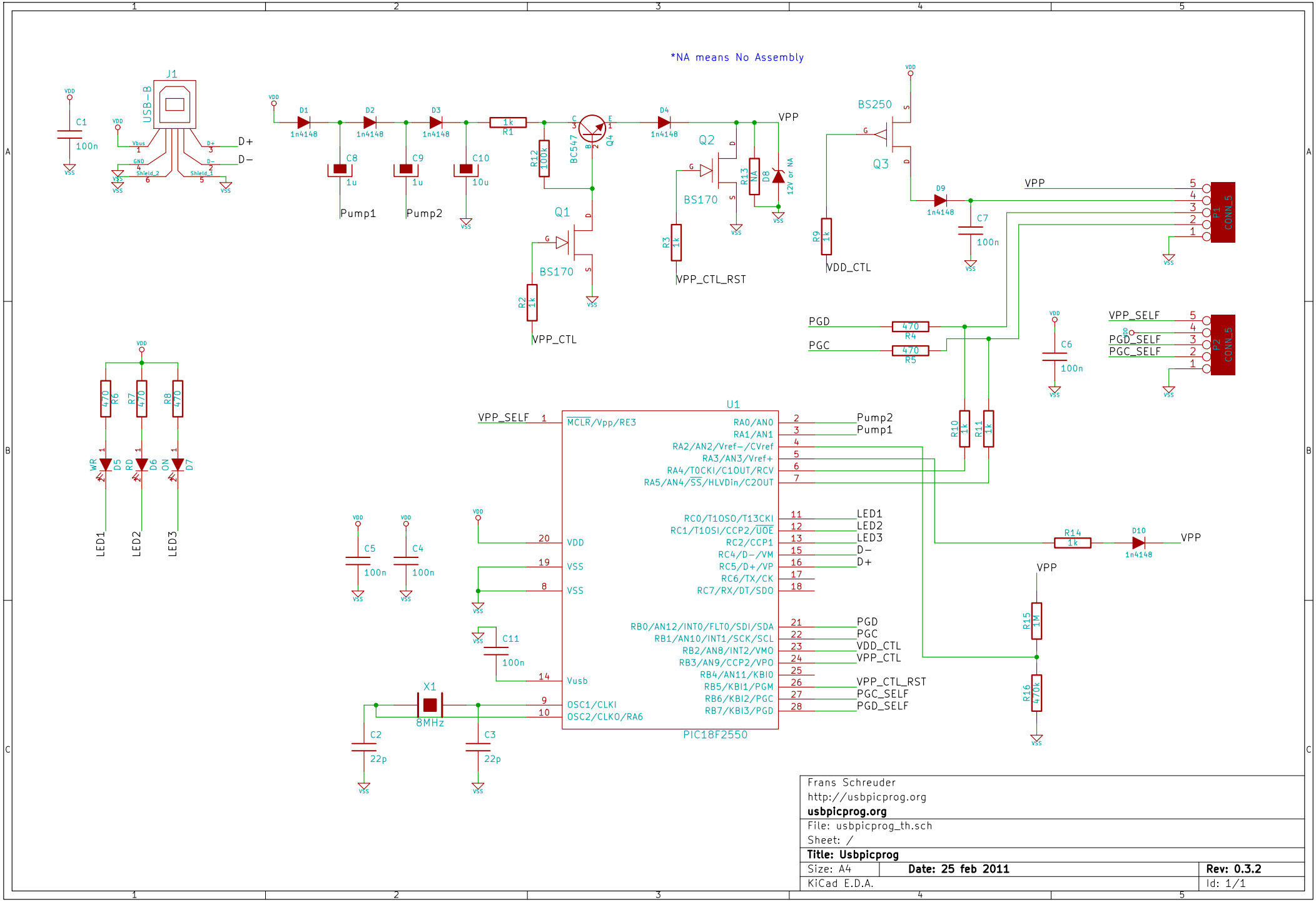

Frans Schreuder http://usbpicprog.org **usbpicprog.org**		
File: usbpicprog_th.sch Sheet: /		
Title: Usbpicprog		
Size: A4	**Date: 25 feb 2011**	**Rev: 0.3.2**
KiCad E.D.A.		Id: 1/1