GeN2™ Comfort

ReGen™

Characteristics

Item	Value
Identification	GNC-R
Unit number	_____
Contract number	_____
Car	[A] [B] [C]
of a group of	[1] [2] [3]
starting with	_____
Riser	[1] [2] [3]
Type	
Model	GNC-R 1000kg 1.0m/s
Controller	GCS 220 GEN2-Comfort
Code	---
Operation	DCL / FCL
Drive	OVFR03B - Ultra Drive
Motorpower	4.0 / 6.50 KW
Machine	1.5T / 2.0T - GreenPower
Arrangement	T 20220S15 / S252 / V251
Type	OVFR03B-401/402
Rated load	320 ~ 1000 kg
Nominal speed	1.00 m/s
Supply	
Earthing	TN-S
Phases	3
Voltage	220 / 380 / 440V
Frequency	50 / 60 Hz
Doors	
Type	TLD / CLD
Drive	AT120 / DO5EM
Voltage	230 V
Lockduty	---
Reardoor	AT120 / DO5EM - optional
Car operating panel	
Count	1
Fixture rows	1
Fixture	---
Alarm and light	
Alarm type	---
Car light	110 / 220V (L + N)
Brake and Blower	
Braketype	DC
Brakevolt	48 V
Brakecurrent	1.70 A
Fanvolt	---
Fancurrent nom	---

Optional features	Descrição	Description	Value
ACB	Botão de Chamada Audível (D-13)	Audible Call Button	OPT
ADO	Abertura Avançada de Portas	Advanced door opening	OPT
ALARB	Sistema de Alarme do Carro	Alarm button and acoustic alarm device	OPT
ALM	Alarme para Mecânicos	Alarm for Mechanics	CTE
APD	Filtro de Rádio Interferencia	Radio interference filter	CTE
ARD	Estacionamento Automático (Programável)	Automatic car return	CTE
BID	Dispositivo de Inspeção das Cintas de Tração	Belt Inspection Device	CTE
BTS	Contato de Fita Quebrada (Frouxa)	Broken tape switch	OPT
CBM	Botão Mecânico do Carro (POC)	Mechanical car button	CTE
CCBL	Chamada de Carro para Primeira Parada	Car call to bottom landing	CTE
CCTL	Chamada de Carro para Ultima Parada	Car call to top landing	CTE
CDI	Indicador de Direção no Carro	Car direction indicator	CTE
CDL	Indicador de Movimento do Carro	Car direction lantern	OPT
CHCS	Chave Corta Chamadas de Hall	Cut off hall call switch	CTE
CHF	Filtro de Harmônicas	Current harmonic filter	N/A
CHT	Tempos de Porta Chamada de Carro e Hall	Separate car and hall call door times	OPT
CPI	Indicador de Posição do Carro	Car position indicator	OPT
CTL	Carro para Pavimento Principal	Car to lobby service	OPT
CTTL	Luz de chamada registrada no carro	Car tell tale lights	CTE
DCB	Botão de Fechar Porta	Door close button	OPT
DDOS	Chave Desabilita Operação de Porta	Disable door operation switch	CTE
DDP	Tempo de Proteção do Drive	Delayed drive protection	CTE
DOB	Botão de Abertura de Porta	Door open button	CTE
DOBF	Botão de Abertura de Porta Rápida	Fast Door Open Button	OPT
DSBD	Door Switch Bridging Device - na GECB	Door Switch Bridging Device	CTE
DTP	Tempo de Proteção da Porta	Door time protection	OPT
DXT	Tempo Extra de Porta	Extra door time	OPT
DZI	Indicador de Zona de Porta	Door zone indicator	CTE
EAR3	Operação de Resgate Automático (ARO-BOX)	Automatic Rescue Operation	OPT
EAR3P	Preparado para ARO-BOX	Controller prepared for ARO-BOX	CTE
ECL	Iluminação de Emergência	Emergency car light	CTE
EEC	Saída de Emergência no Teto do Carro	Top of Car Emergency Exit	OPT
EFO	Serviço de Bombeiro	Emergency firemen operation	OPT
EPFL3	Fonte Externa - Serial Hall (30VDC)	Extended power supply for link (30VDC)	OPT
EPO	Operação com Força de Emergência	Emergency Power Operation	OPT
ERO	Operação de Resgate Elétrico	Electrical recall operation	CTE
FAN-2	Ventilador da Cabina (temporizado)	Car fan operated by controller	OPT
GTC	Contato do Tensor	Governor tension contact	CTE
HBM	Botão Mecânico do Hall	Mechanical hall button	CTE
HPI	Indicador de Posição no Pavimento	Hall Position Indicator	OPT
HTTL	Luz de Chamada Registrada no Hall	Hall tell tale lights	CTE
ICU-3	Sistemas de intercomunicação tres pontos	Intercommunication Unit	CTE
IRC2D	Cortina de Porta Infra-Vermelho 2D (LAMBDA)	Infrared Curtain Door Protection 2D	OPT
ISC-1	Serviço Independente	Independent service type 1	CTE
LIH	Luz no Passadiço	Light In Hoistway	OPT
LNS	Ultrapassagem automática com carro lotado	Load wheighing bypass	CTE
LPT	Sinal de Passagem de Andar	Landing Passing Tone	OPT
LRD	Foto célula	Light ray device	OPT
LW-11	Célula de Carga (Pesador de Carga)	Hitchloadweighing	CTE
NBR	Numero de Carreiras de Botões	Number of button risers	STD-1
OCB	Disjuntor de Sobrecarga (Principal)	Overload circuit breaker	CTE
OLD	Indicador de Sobrecarga na Cabina	Overload device	OPT
OS	Contato do Lmitador de Velocidade	Overspeed switch (governor)	CTE
PES-1	Chave de Emergência do Poço	Pit emergency stop switch	CTE
PES-2	2° Chave de Emergência do Poço	Second pit emergency switch	OPT
PRS	Sistema de Referência de Posição	Position reference system	CTE
REM5P	Preparado para REM 5.0	REM 5.0; with housekeeper facilities; Prepared, not delivered	CTE
RLEV	Renivelamento	Releveling operation	OPT
SAC	Access Code	Car Segurity Access	OPT
SDO-2	Operação de Portas Semi-Seletiva	Semi selective door operation	OPT
SHDL	Indicador de movimento no pavimento	Signal hall direction lantern	OPT
SHL	Lanterna do Hall (Gongo)	Signal hall lantern	OPT
SKL	Disjuntor Geral da Iluminação	Light service disconnect switch	CTE
SLS	Chave Limite de Subida (Inspeção)	Inspection up limit switch	CTE
SOS	Chave do Freio de Segurança Operado	Safety operated switch	CTE
SSM	Sintetizador de voz	Voice Synthesizer Module	OPT
TCIB	Inspeção no Topo do Carro	Inspection control button	CTE
THB	Termo Contato	Thermo contact	CTE
TOCS	Tomada no Topo do Carro	Top of car socket	CTE

CHANGES

WARNING

THIS WORK AND THE INFORMATION IT CONTAINS ARE THE PROPERTY OF OTIS ELEVATOR COMPANY ("OTIS"). IT IS DELIVERED TO OTHERS ON THE EXPRESS CONDITION THAT IT WILL BE USED FOR, OR ON BEHALF OF, OTIS; THAT NEITHER IT NOR THE INFORMATION IT CONTAINS WILL BE REPRODUCED OR DISCLOSED, IN WHOLE OR IN PART, WITHOUT THE PRIOR WRITTEN CONCENT OF OTIS; AND THAT ON DEMAND IT AND ANY COPIES WILL BE PROMPTLY RETURNED TO OTIS.

UNPUBLISHED WORK © OTIS ELEVATOR COMPANY. ALL RIGHTS RESERVED

Otis
A United Technologies Company

Controller Wiring Diagram
Diagrama Elétrico do Controle

GeN2-Comfort / Regen-UD

DWG BAA21000H

OTIS ENGINEERING
SIT São Bernardo - BRAZIL

CUSTOMER:	DRAWN	Richard Horn	ORIGINAL DATE
	CHK	Richard Horn	29/02/2012
PROJECT:	APPD	Marcos Gomes	45 SHEETS
LOCATION:	AUTH	11/A-006	SHEET 1

DRAFTED IN ACCORDANCE WITH OTIS DOCUMENT 52847

Rev. 2011-03-24

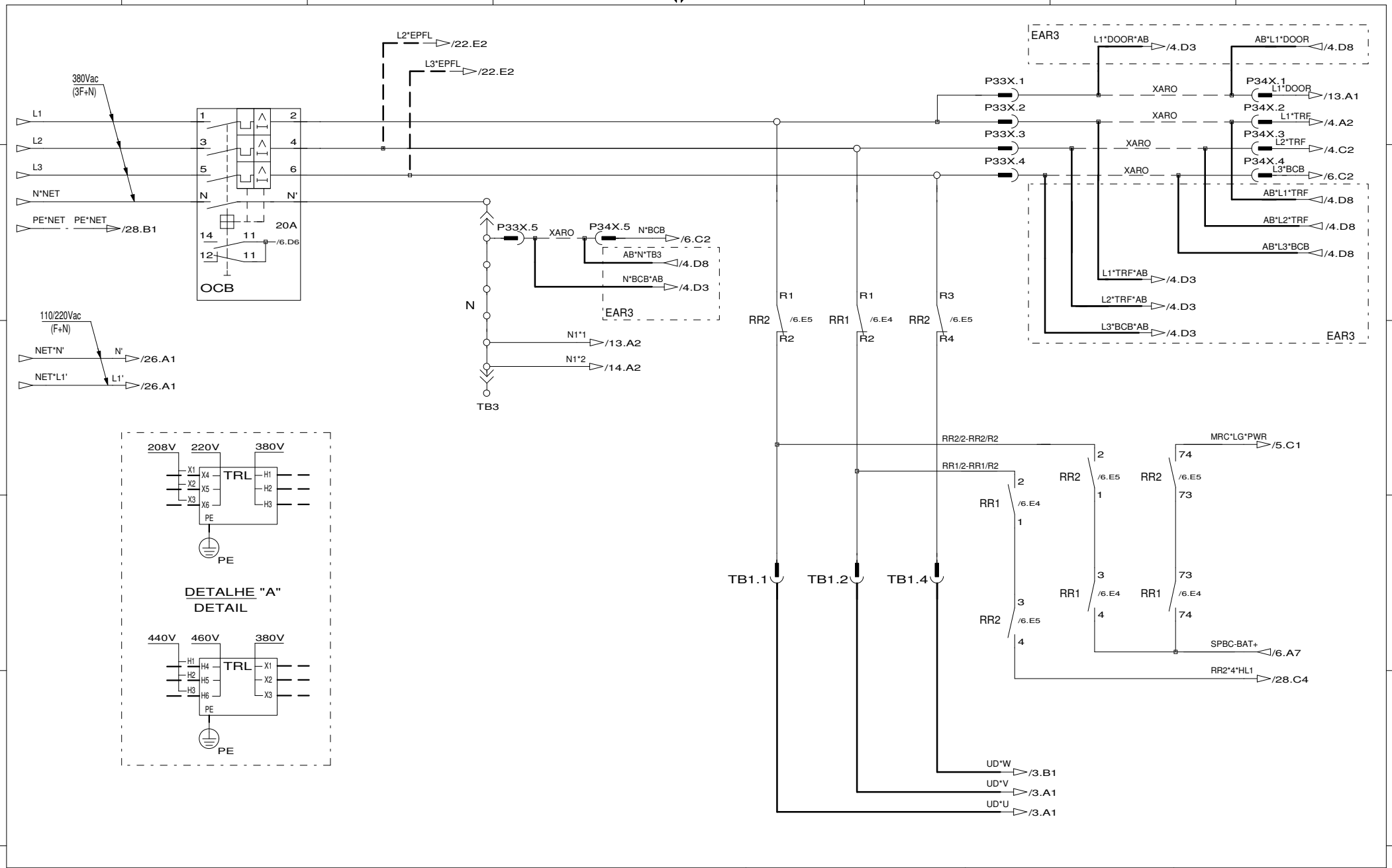

CHANGES

WARNING

THIS WORK AND THE INFORMATION IT CONTAINS ARE THE PROPERTY OF OTIS ELEVATOR COMPANY ("OTIS"). IT IS DELIVERED TO OTHERS ON THE EXPRESS CONDITION THAT IT WILL BE USED FOR, OR ON BEHALF OF, OTIS; THAT NEITHER IT NOR THE INFORMATION IT CONTAINS WILL BE REPRODUCED OR DISCLOSED, IN WHOLE OR IN PART, WITHOUT THE PRIOR WRITTEN CONCENT OF OTIS; AND THAT ON DEMAND IT AND ANY COPIES WILL BE PROMPTLY RETURNED TO OTIS.

UNPUBLISHED WORK © OTIS ELEVATOR COMPANY. ALL RIGHTS RESERVED

Otis
A United Technologies Company

Controller Wiring Diagram
Diagrama Elétrico do Controle

GeN2-Comfort / Regen-UD

DWG BAA21000H

OTIS ENGINEERING
SIT São Bernardo - BRAZIL

CUSTOMER:	DRAWN	Richard Horn	ORIGINAL DATE
	CHK	Richard Horn	29/02/2012
PROJECT:	APPD	Marcos Gomes	SHEETS
LOCATION:	AUTH	11/A-006	SHEET 2

DRAFTED IN ACCORDANCE WITH OTIS DOCUMENT 52847

Rev. 2011-03-24

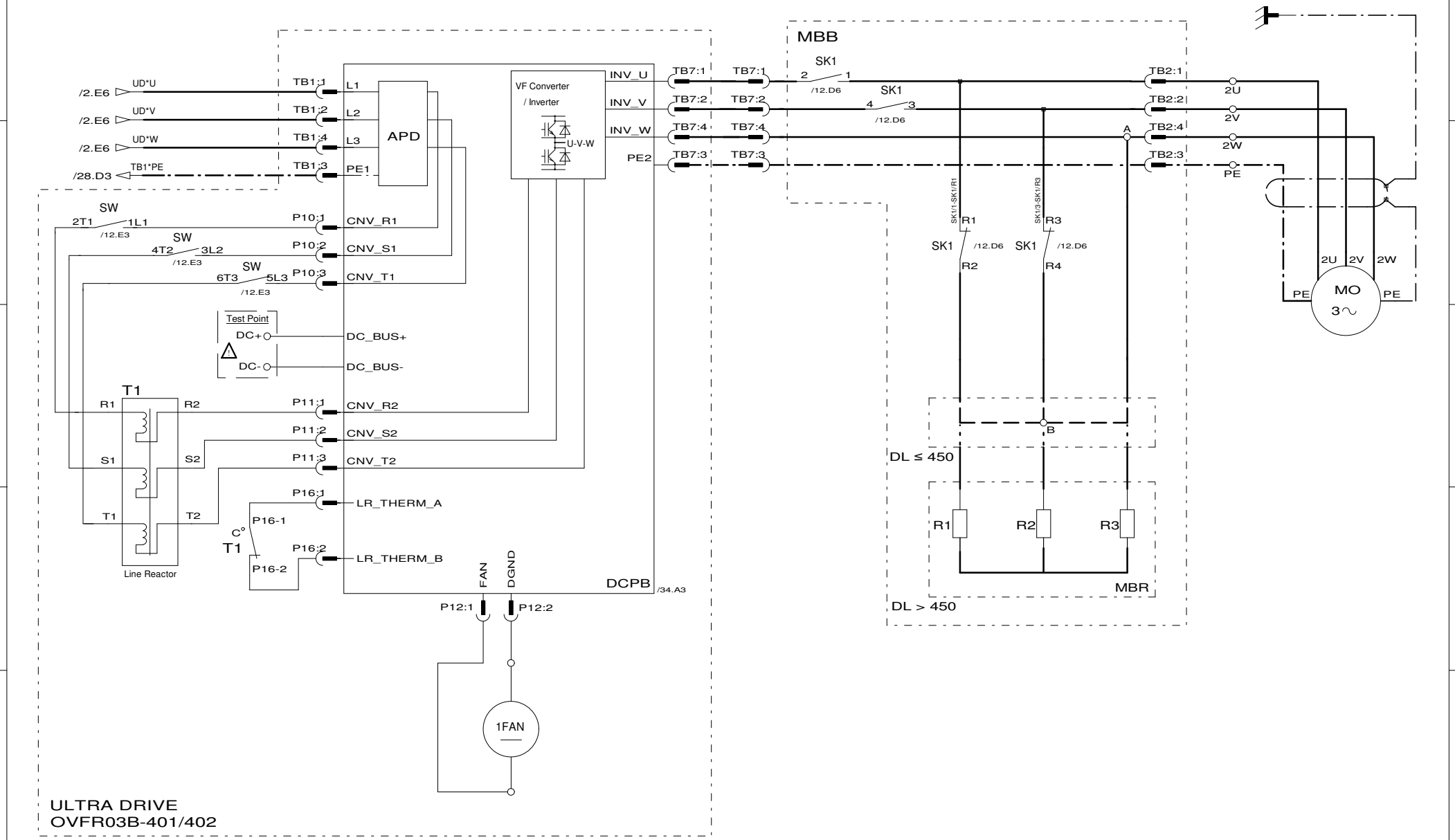

CHANGES

WARNING

THIS WORK AND THE INFORMATION IT CONTAINS ARE THE PROPERTY OF OTIS ELEVATOR COMPANY ("OTIS"). IT IS DELIVERED TO OTHERS ON THE EXPRESS CONDITION THAT IT WILL BE USED FOR, OR ON BEHALF OF, OTIS; THAT NEITHER IT NOR THE INFORMATION IT CONTAINS WILL BE REPRODUCED OR DISCLOSED, IN WHOLE OR IN PART, WITHOUT THE PRIOR WRITTEN CONCENT OF OTIS; AND THAT ON DEMAND IT AND ANY COPIES WILL BE PROMPTLY RETURNED TO OTIS.

UNPUBLISHED WORK © OTIS ELEVATOR COMPANY. ALL RIGHTS RESERVED

Otis
A United Technologies Company

Controller Wiring Diagram
Diagrama Elétrico do Controle

GeN2-Comfort / Regen-UD

DWG BAA21000H

OTIS ENGINEERING
SIT São Bernardo - BRAZIL

CUSTOMER:	DRAWN	Richard Horn	ORIGINAL DATE
	CHK	Richard Horn	29/02/2012
PROJECT:	APPD	Marcos Gomes	SHEETS
LOCATION:	AUTH	11/A-006	SHEET 3

DRAFTED IN ACCORDANCE WITH OTIS DOCUMENT 52847

Rev. 2011-03-24

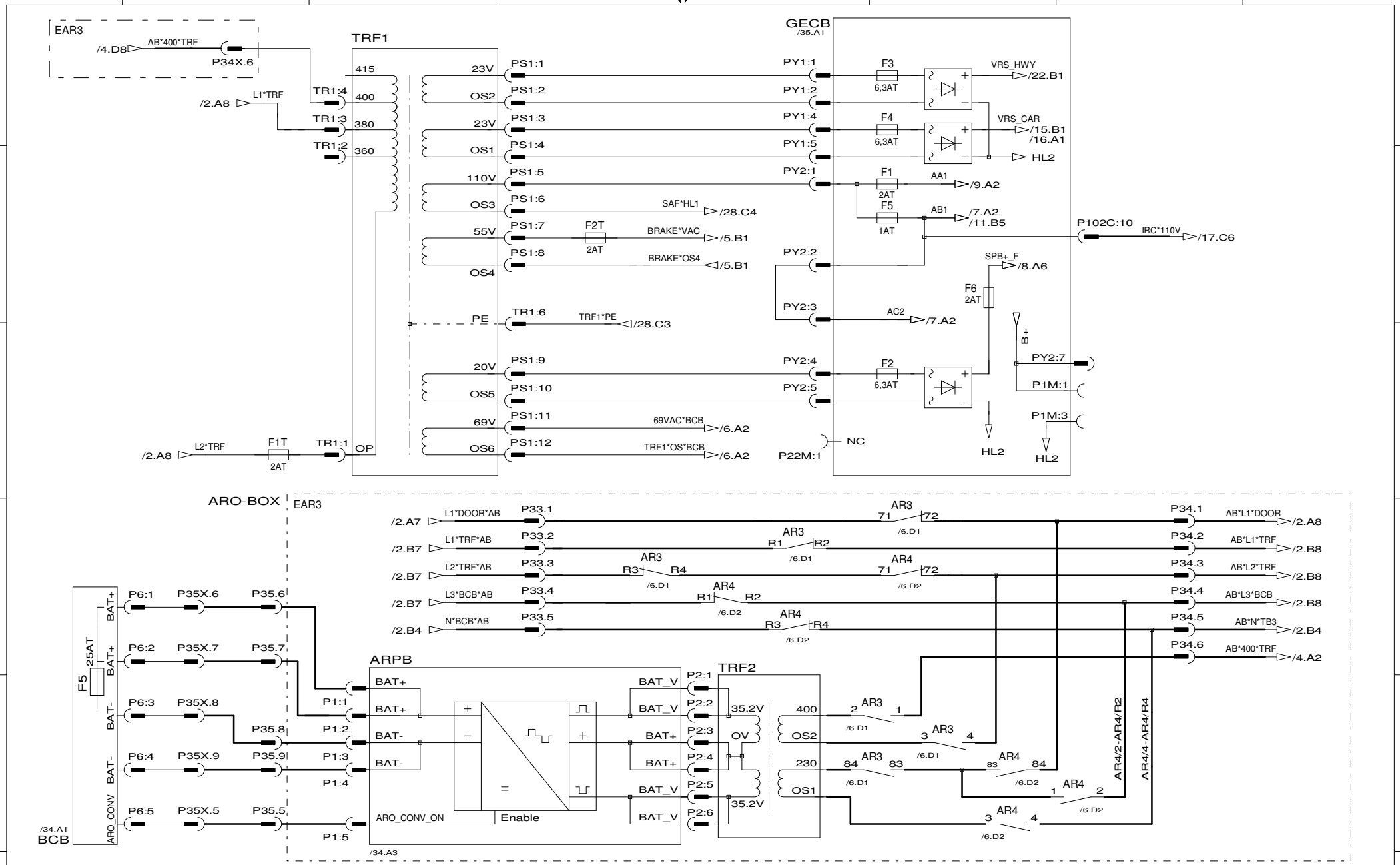

CHANGES

WARNING

THIS WORK AND THE INFORMATION IT CONTAINS ARE THE PROPERTY OF OTIS ELEVATOR COMPANY ("OTIS"). IT IS DELIVERED TO OTHERS ON THE EXPRESS CONDITION THAT IT WILL BE USED FOR, OR ON BEHALF OF, OTIS; THAT NEITHER IT NOR THE INFORMATION IT CONTAINS WILL BE REPRODUCED OR DISCLOSED, IN WHOLE OR IN PART, WITHOUT THE PRIOR WRITTEN CONCENT OF OTIS; AND THAT ON DEMAND IT AND ANY COPIES WILL BE PROMPTLY RETURNED TO OTIS.

UNPUBLISHED WORK © OTIS ELEVATOR COMPANY. ALL RIGHTS RESERVED

Otis
A United Technologies Company

Controller Wiring Diagram
Diagrama Elétrico do Controle

GeN2-Comfort / Regen-UD

DWG BAA21000H

OTIS ENGINEERING
SIT São Bernardo - BRAZIL

CUSTOMER:	DRAWN	Richard Horn	ORIGINAL DATE
	CHK	Richard Horn	29/02/2012
PROJECT:	APPD	Marcos Gomes	SHEETS
LOCATION:	AUTH	11/A-006	SHEET 4

DRAFTED IN ACCORDANCE WITH OTIS DOCUMENT 52847

Rev. 2011-03-24

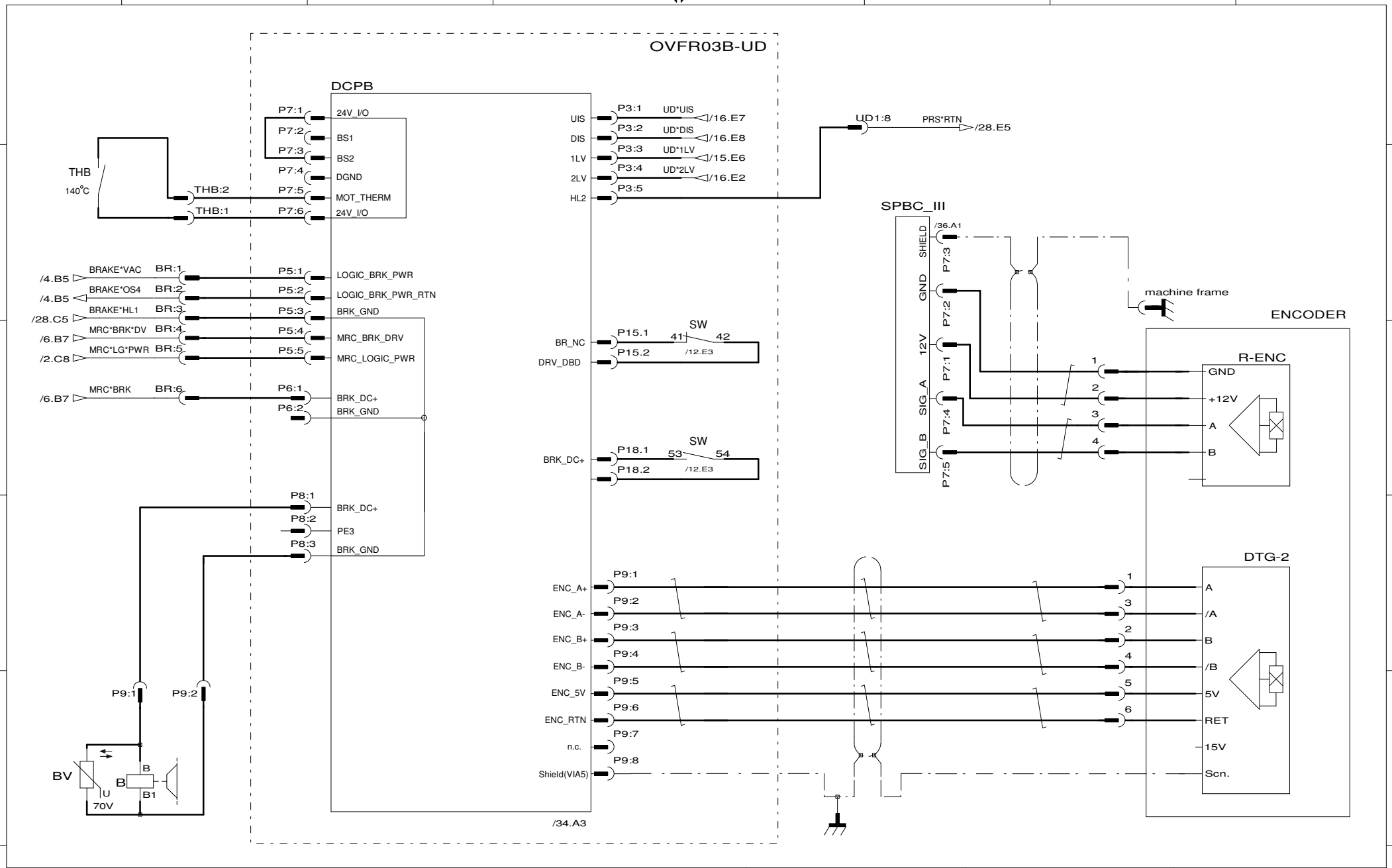

CHANGES

WARNING

THIS WORK AND THE INFORMATION IT CONTAINS ARE THE PROPERTY OF OTIS ELEVATOR COMPANY ("OTIS"). IT IS DELIVERED TO OTHERS ON THE EXPRESS CONDITION THAT IT WILL BE USED FOR, OR ON BEHALF OF, OTIS; THAT NEITHER IT NOR THE INFORMATION IT CONTAINS WILL BE REPRODUCED OR DISCLOSED, IN WHOLE OR IN PART, WITHOUT THE PRIOR WRITTEN CONCENT OF OTIS; AND THAT ON DEMAND IT AND ANY COPIES WILL BE PROMPTLY RETURNED TO OTIS.

UNPUBLISHED WORK © OTIS ELEVATOR COMPANY. ALL RIGHTS RESERVED

Otis
A United Technologies Company

Controller Wiring Diagram
Diagrama Elétrico do Controle

GeN2-Comfort / Regen-UD

DWG BAA21000H

OTIS ENGINEERING
SIT São Bernardo - BRAZIL

CUSTOMER:	DRAWN	Richard Horn	ORIGINAL DATE
	CHK	Richard Horn	29/02/2012
PROJECT:	APPD	Marcos Gomes	SHEETS
LOCATION:	AUTH	11/A-006	SHEET 5

DRAFTED IN ACCORDANCE WITH OTIS DOCUMENT 52847

Rev. 2011-03-24

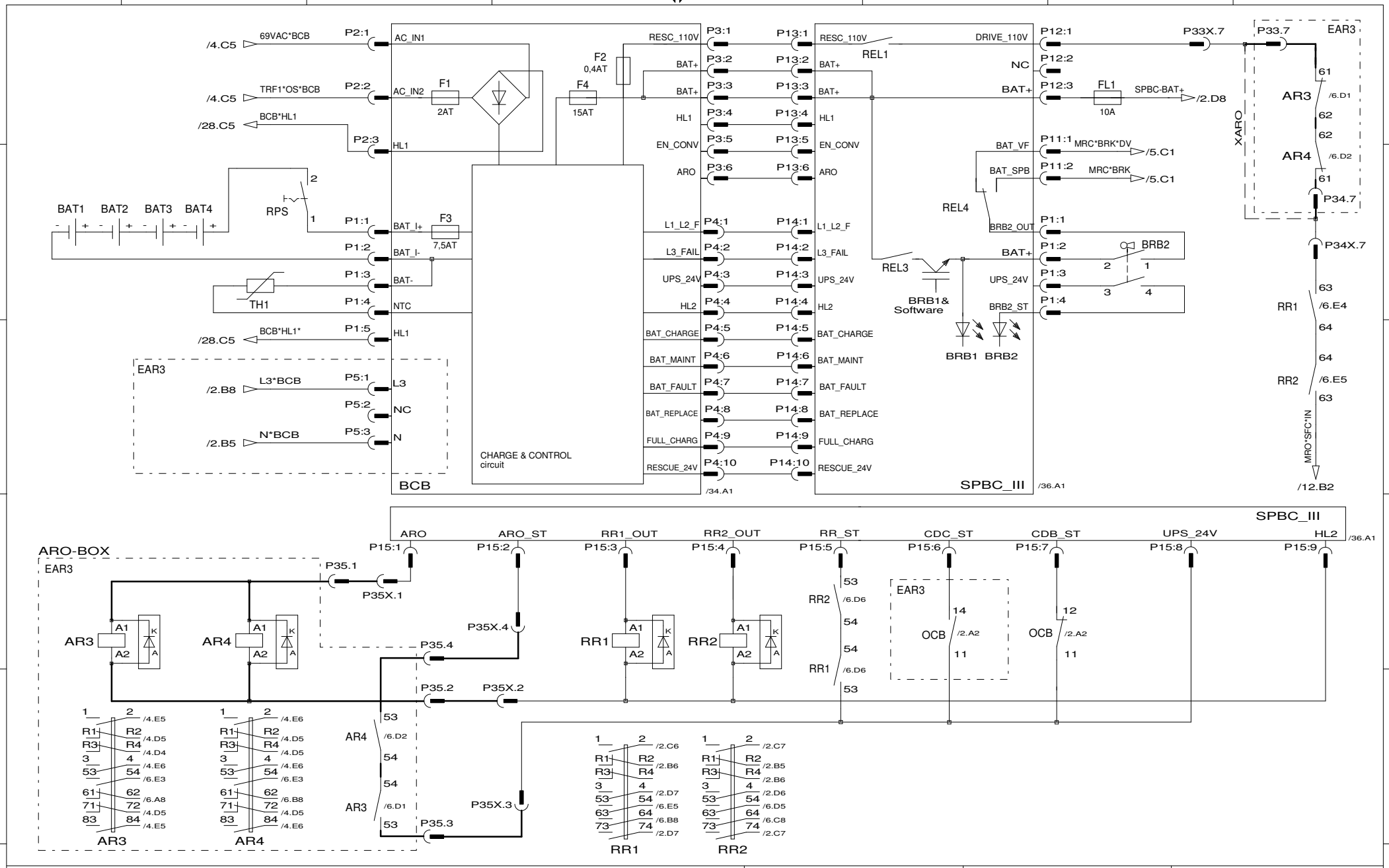

CHANGES

WARNING
THIS WORK AND THE INFORMATION IT CONTAINS ARE THE PROPERTY OF OTIS ELEVATOR COMPANY ("OTIS"). IT IS DELIVERED TO OTHERS ON THE EXPRESS CONDITION THAT IT WILL BE USED FOR, OR ON BEHALF OF, OTIS; THAT NEITHER IT NOR THE INFORMATION IT CONTAINS WILL BE REPRODUCED OR DISCLOSED, IN WHOLE OR IN PART, WITHOUT THE PRIOR WRITTEN CONCENT OF OTIS; AND THAT ON DEMAND IT AND ANY COPIES WILL BE PROMPTLY RETURNED TO OTIS.
UNPUBLISHED WORK © OTIS ELEVATOR COMPANY. ALL RIGHTS RESERVED

Otis
A United Technologies Company

Controller Wiring Diagram
Diagrama Elétrico do Controle
GeN2-Comfort / Regen-UD

DWG BAA21000H

OTIS ENGINEERING
SIT São Bernardo - BRAZIL

CUSTOMER:	DRAWN	Richard Horn	ORIGINAL DATE 29/02/2012
	CHK	Richard Horn	
PROJECT:	APPD	Marcos Gomes	SHEETS
LOCATION:	AUTH	11/A-006	SHEET 6

DRAFTED IN ACCORDANCE WITH OTIS DOCUMENT 52847

Rev. 2011-03-24

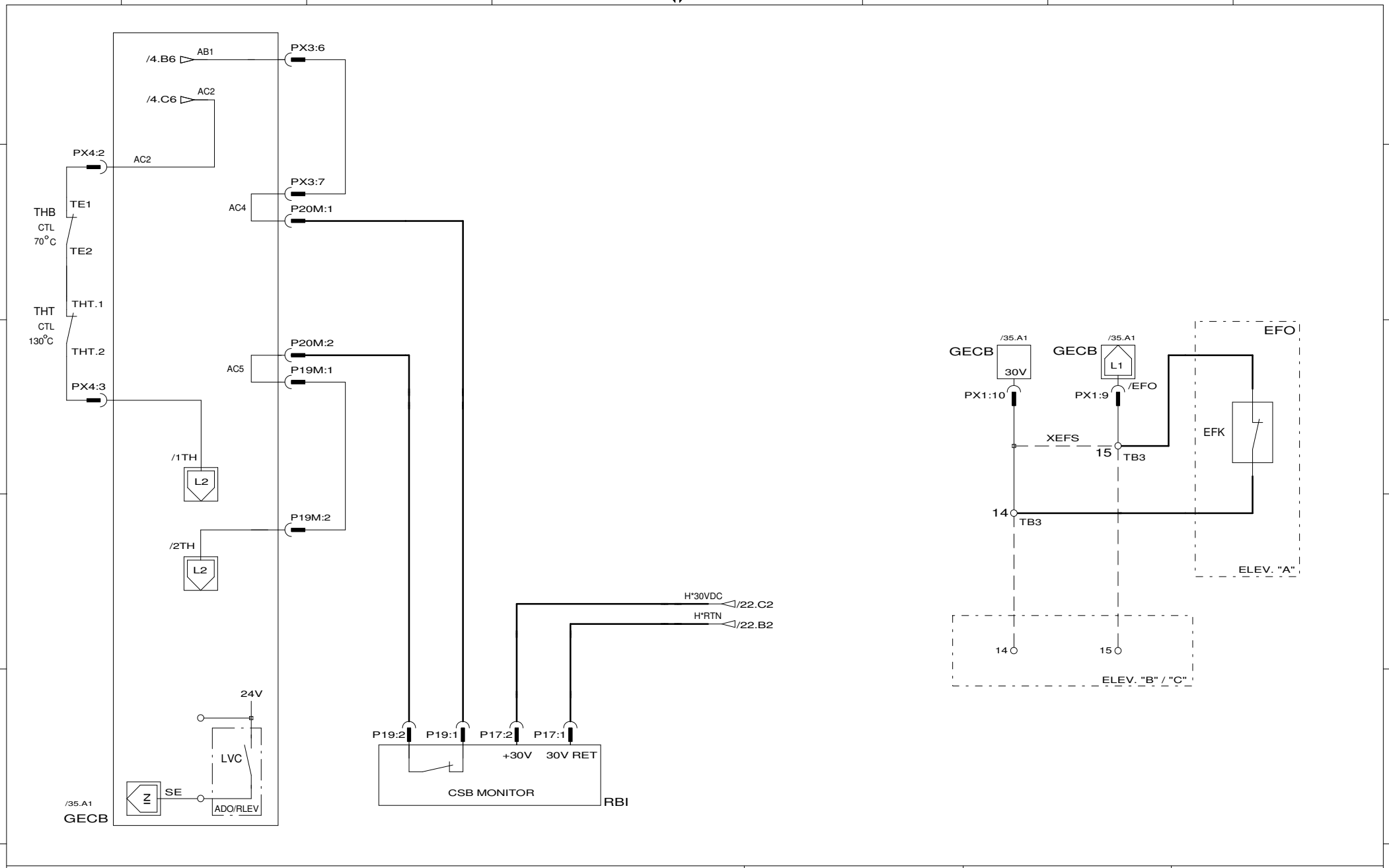

CHANGES

Rev. 2011-03-24

WARNING

THIS WORK AND THE INFORMATION IT CONTAINS ARE THE PROPERTY OF OTIS ELEVATOR COMPANY ("OTIS"). IT IS DELIVERED TO OTHERS ON THE EXPRESS CONDITION THAT IT WILL BE USED FOR, OR ON BEHALF OF, OTIS; THAT NEITHER IT NOR THE INFORMATION IT CONTAINS WILL BE REPRODUCED OR DISCLOSED, IN WHOLE OR IN PART, WITHOUT THE PRIOR WRITTEN CONCENT OF OTIS; AND THAT ON DEMAND IT AND ANY COPIES WILL BE PROMPTLY RETURNED TO OTIS.

UNPUBLISHED WORK © OTIS ELEVATOR COMPANY. ALL RIGHTS RESERVED

Otis
A United Technologies Company

Controller Wiring Diagram
Diagrama Elétrico do Controle

GeN2-Comfort / Regen-UD

DWG BAA21000H

OTIS ENGINEERING
SIT São Bernardo - BRAZIL

CUSTOMER:	DRAWN	Richard Horn	ORIGINAL DATE
	CHK	Richard Horn	29/02/2012
PROJECT:	APPD	Marcos Gomes	SHEETS
LOCATION:	AUTH	11/A-006	SHEET 7

DRAFTED IN ACCORDANCE WITH OTIS DOCUMENT 52847

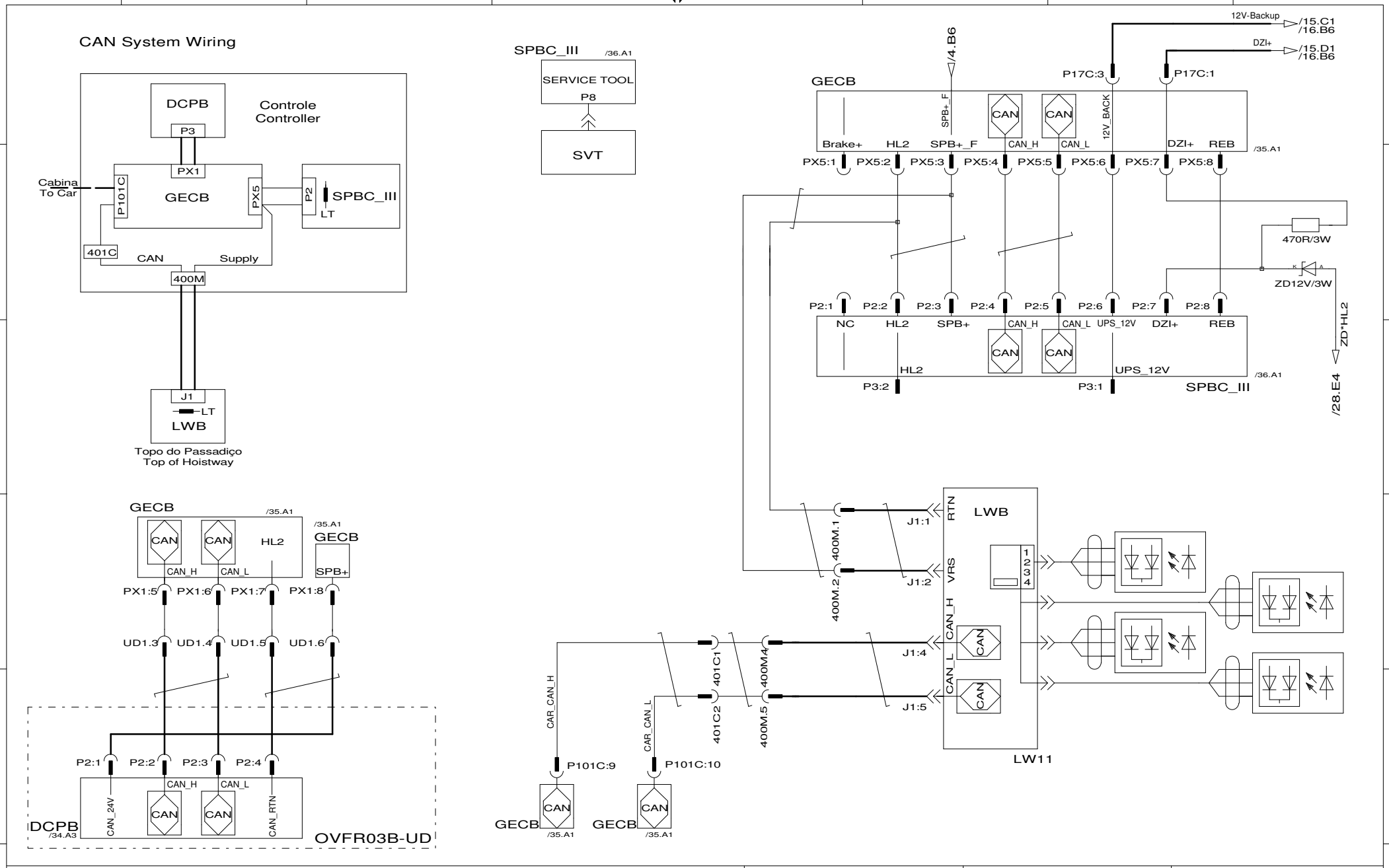

CHANGES

WARNING

THIS WORK AND THE INFORMATION IT CONTAINS ARE THE PROPERTY OF OTIS ELEVATOR COMPANY ("OTIS"). IT IS DELIVERED TO OTHERS ON THE EXPRESS CONDITION THAT IT WILL BE USED FOR, OR ON BEHALF OF, OTIS; THAT NEITHER IT NOR THE INFORMATION IT CONTAINS WILL BE REPRODUCED OR DISCLOSED, IN WHOLE OR IN PART, WITHOUT THE PRIOR WRITTEN CONCENT OF OTIS; AND THAT ON DEMAND IT AND ANY COPIES WILL BE PROMPTLY RETURNED TO OTIS.

UNPUBLISHED WORK © OTIS ELEVATOR COMPANY. ALL RIGHTS RESERVED

Otis
A United Technologies Company

Controller Wiring Diagram
Diagrama Elétrico do Controle

GeN2-Comfort / Regen-UD

DWG BAA21000H

OTIS ENGINEERING
SIT São Bernardo - BRAZIL

CUSTOMER:	DRAWN	Richard Horn	ORIGINAL DATE
	CHK	Richard Horn	29/02/2012
PROJECT:	APPD	Marcos Gomes	SHEETS
LOCATION:	AUTH	11/A-006	SHEET 8

DRAFTED IN ACCORDANCE WITH OTIS DOCUMENT 52847

Rev. 2011-03-24

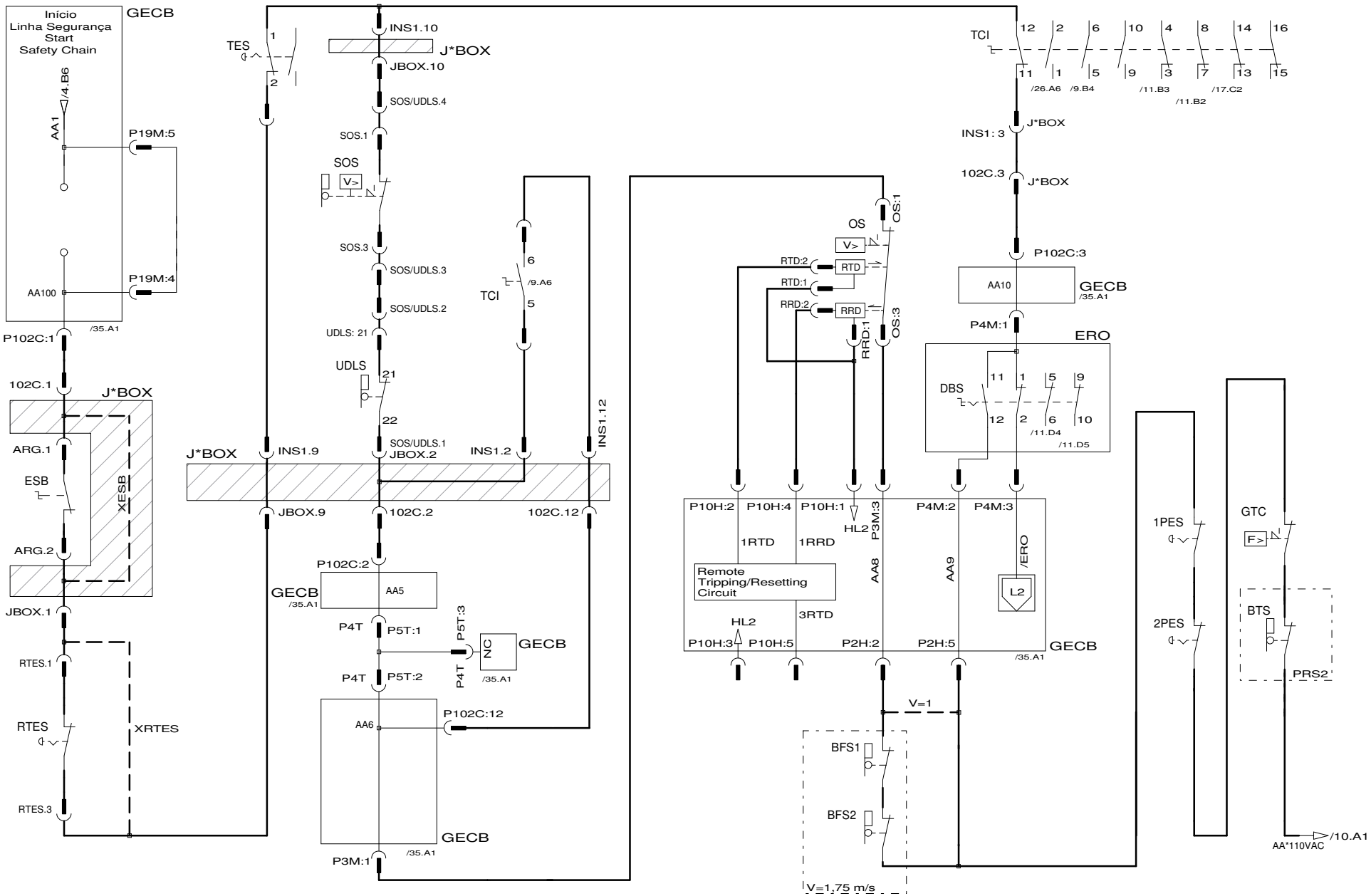

CHANGES

WARNING

THIS WORK AND THE INFORMATION IT CONTAINS ARE THE PROPERTY OF OTIS ELEVATOR COMPANY ("OTIS"). IT IS DELIVERED TO OTHERS ON THE EXPRESS CONDITION THAT IT WILL BE USED FOR, OR ON BEHALF OF, OTIS; THAT NEITHER IT NOR THE INFORMATION IT CONTAINS WILL BE REPRODUCED OR DISCLOSED, IN WHOLE OR IN PART, WITHOUT THE PRIOR WRITTEN CONCENT OF OTIS; AND THAT ON DEMAND IT AND ANY COPIES WILL BE PROMPTLY RETURNED TO OTIS.

UNPUBLISHED WORK © OTIS ELEVATOR COMPANY. ALL RIGHTS RESERVED

Otis
A United Technologies Company

Controller Wiring Diagram
Diagrama Elétrico do Controle

GeN2-Comfort / Regen-UD

DWG BAA21000H

OTIS ENGINEERING
SIT São Bernardo - BRAZIL

CUSTOMER:	DRAWN	Richard Horn	ORIGINAL DATE
	CHK	Richard Horn	29/02/2012
PROJECT:	APPD	Marcos Gomes	SHEETS
LOCATION:	AUTH	11/A-006	SHEET 9

DRAFTED IN ACCORDANCE WITH OTIS DOCUMENT 52847

Rev. 2011-03-24

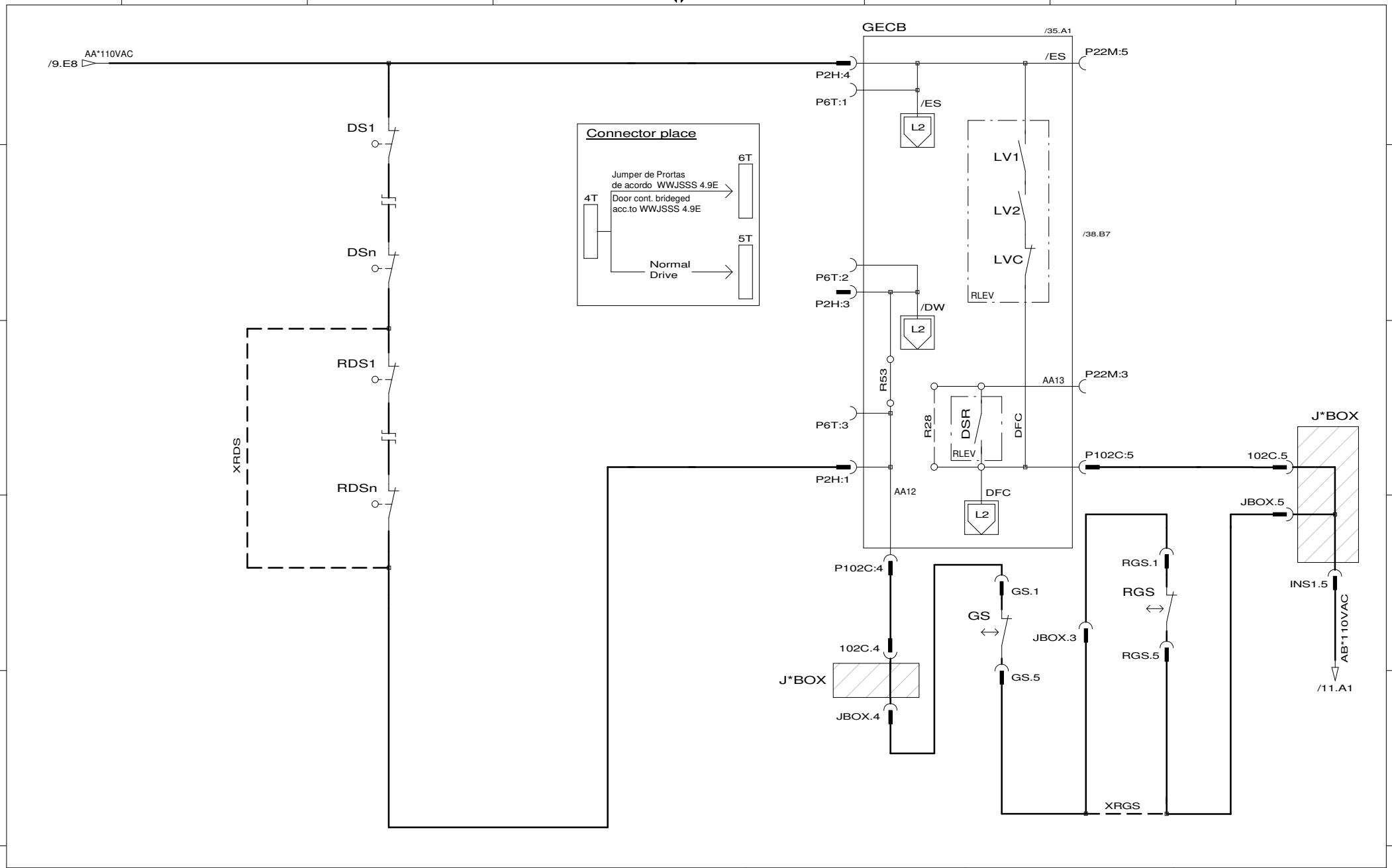

CHANGES

Rev. 2011-03-24

WARNING

THIS WORK AND THE INFORMATION IT CONTAINS ARE THE PROPERTY OF OTIS ELEVATOR COMPANY ("OTIS"). IT IS DELIVERED TO OTHERS ON THE EXPRESS CONDITION THAT IT WILL BE USED FOR, OR ON BEHALF OF, OTIS; THAT NEITHER IT NOR THE INFORMATION IT CONTAINS WILL BE REPRODUCED OR DISCLOSED, IN WHOLE OR IN PART, WITHOUT THE PRIOR WRITTEN CONCENT OF OTIS; AND THAT ON DEMAND IT AND ANY COPIES WILL BE PROMPTLY RETURNED TO OTIS.

UNPUBLISHED WORK © OTIS ELEVATOR COMPANY. ALL RIGHTS RESERVED

Otis
A United Technologies Company

Controller Wiring Diagram
Diagrama Elétrico do Controle

GeN2-Comfort / Regen-UD

DWG BAA21000H

OTIS ENGINEERING
SIT São Bernardo - BRAZIL

CUSTOMER:	DRAWN	Richard Horn	ORIGINAL DATE
	CHK	Richard Horn	29/02/2012
PROJECT:	APPD	Marcos Gomes	SHEETS
LOCATION:	AUTH	11/A-006	SHEET 10

DRAFTED IN ACCORDANCE WITH OTIS DOCUMENT 52847

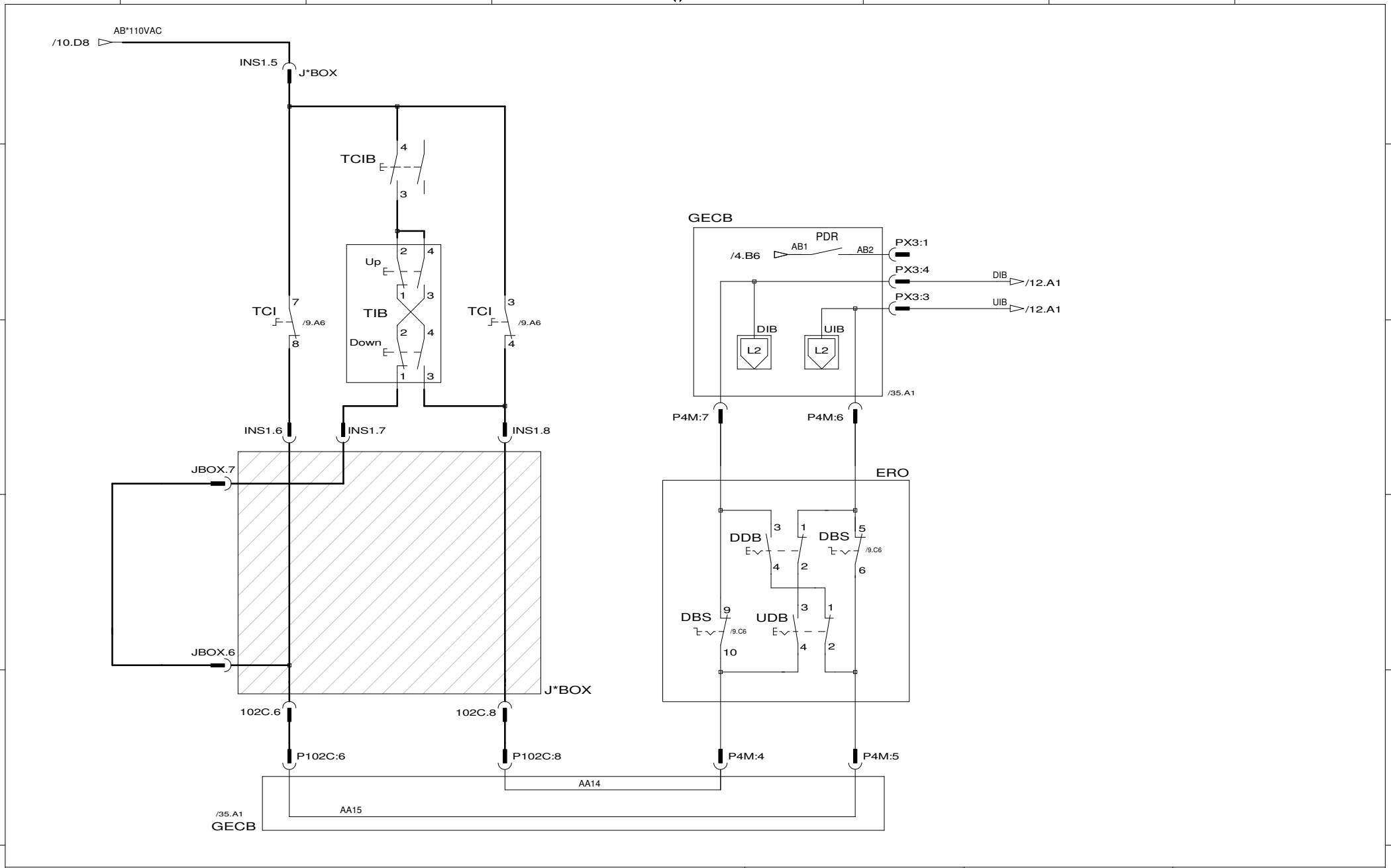

CHANGES

WARNING

THIS WORK AND THE INFORMATION IT CONTAINS ARE THE PROPERTY OF OTIS ELEVATOR COMPANY ("OTIS"). IT IS DELIVERED TO OTHERS ON THE EXPRESS CONDITION THAT IT WILL BE USED FOR, OR ON BEHALF OF, OTIS; THAT NEITHER IT NOR THE INFORMATION IT CONTAINS WILL BE REPRODUCED OR DISCLOSED, IN WHOLE OR IN PART, WITHOUT THE PRIOR WRITTEN CONCENT OF OTIS; AND THAT ON DEMAND IT AND ANY COPIES WILL BE PROMPTLY RETURNED TO OTIS.

UNPUBLISHED WORK © OTIS ELEVATOR COMPANY. ALL RIGHTS RESERVED

Otis
A United Technologies Company

Controller Wiring Diagram
Diagrama Elétrico do Controle

GeN2-Comfort / Regen-UD

DWG BAA21000H

OTIS ENGINEERING
SIT São Bernardo - BRAZIL

CUSTOMER:	DRAWN	Richard Horn	ORIGINAL DATE
	CHK	Richard Horn	29/02/2012
PROJECT:	APPD	Marcos Gomes	SHEETS
LOCATION:	AUTH	11/A-006	SHEET 11

DRAFTED IN ACCORDANCE WITH OTIS DOCUMENT 52847

Rev. 2011-03-24

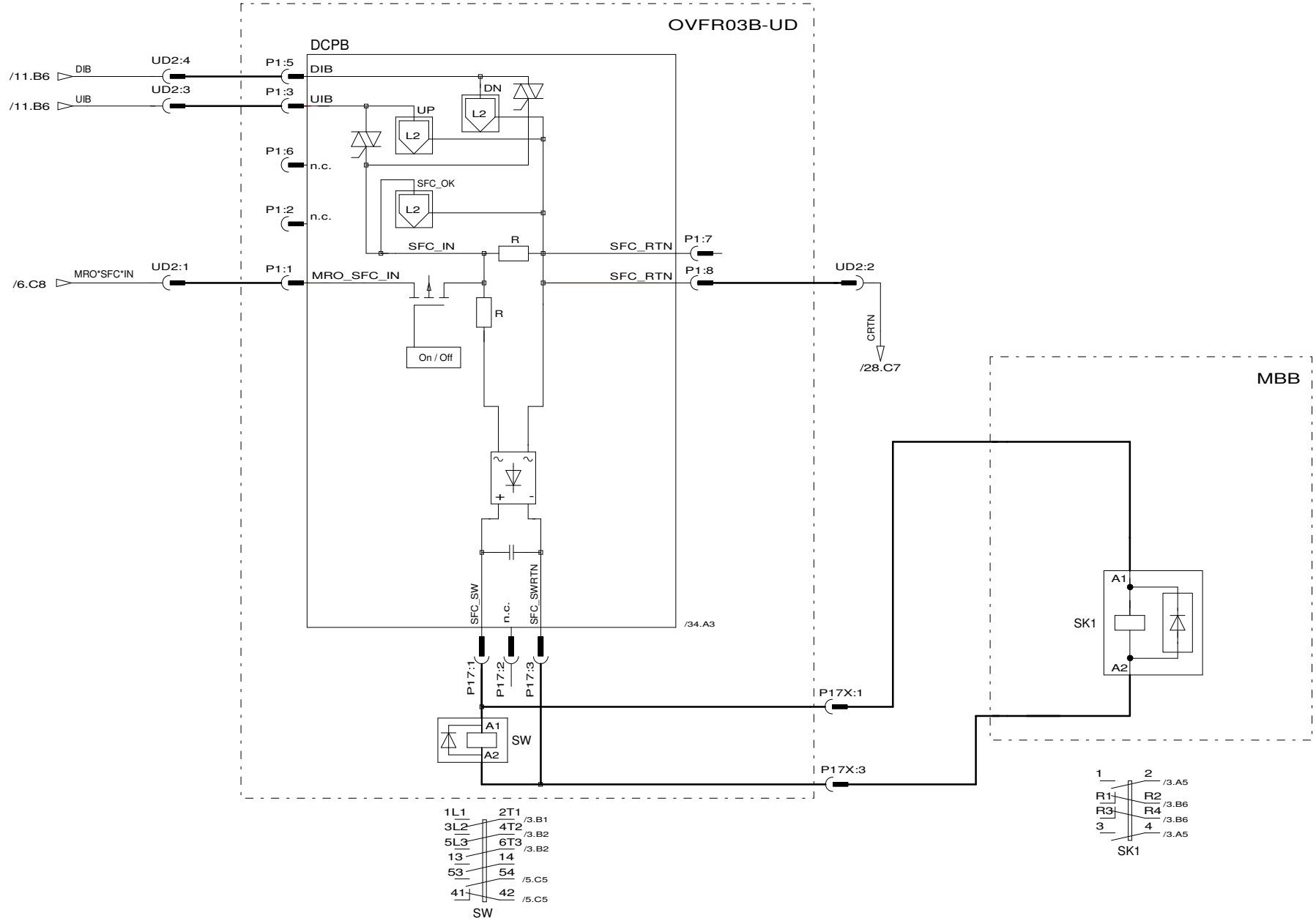

CHANGES

Rev. 2011-03-24

WARNING

THIS WORK AND THE INFORMATION IT CONTAINS ARE THE PROPERTY OF OTIS ELEVATOR COMPANY ("OTIS"). IT IS DELIVERED TO OTHERS ON THE EXPRESS CONDITION THAT IT WILL BE USED FOR, OR ON BEHALF OF, OTIS; THAT NEITHER IT NOR THE INFORMATION IT CONTAINS WILL BE REPRODUCED OR DISCLOSED, IN WHOLE OR IN PART, WITHOUT THE PRIOR WRITTEN CONCENT OF OTIS; AND THAT ON DEMAND IT AND ANY COPIES WILL BE PROMPTLY RETURNED TO OTIS.

UNPUBLISHED WORK © OTIS ELEVATOR COMPANY. ALL RIGHTS RESERVED

Otis
A United Technologies Company

Controller Wiring Diagram
Diagrama Elétrico do Controle

GeN2-Comfort / Regen-UD

DWG BAA21000H

OTIS ENGINEERING
SIT São Bernardo - BRAZIL

CUSTOMER:	DRAWN	Richard Horn	ORIGINAL DATE
	CHK	Richard Horn	29/02/2012
PROJECT:	APPD	Marcos Gomes	SHEETS
LOCATION:	AUTH	11/A-006	SHEET 12

DRAFTED IN ACCORDANCE WITH OTIS DOCUMENT 52847

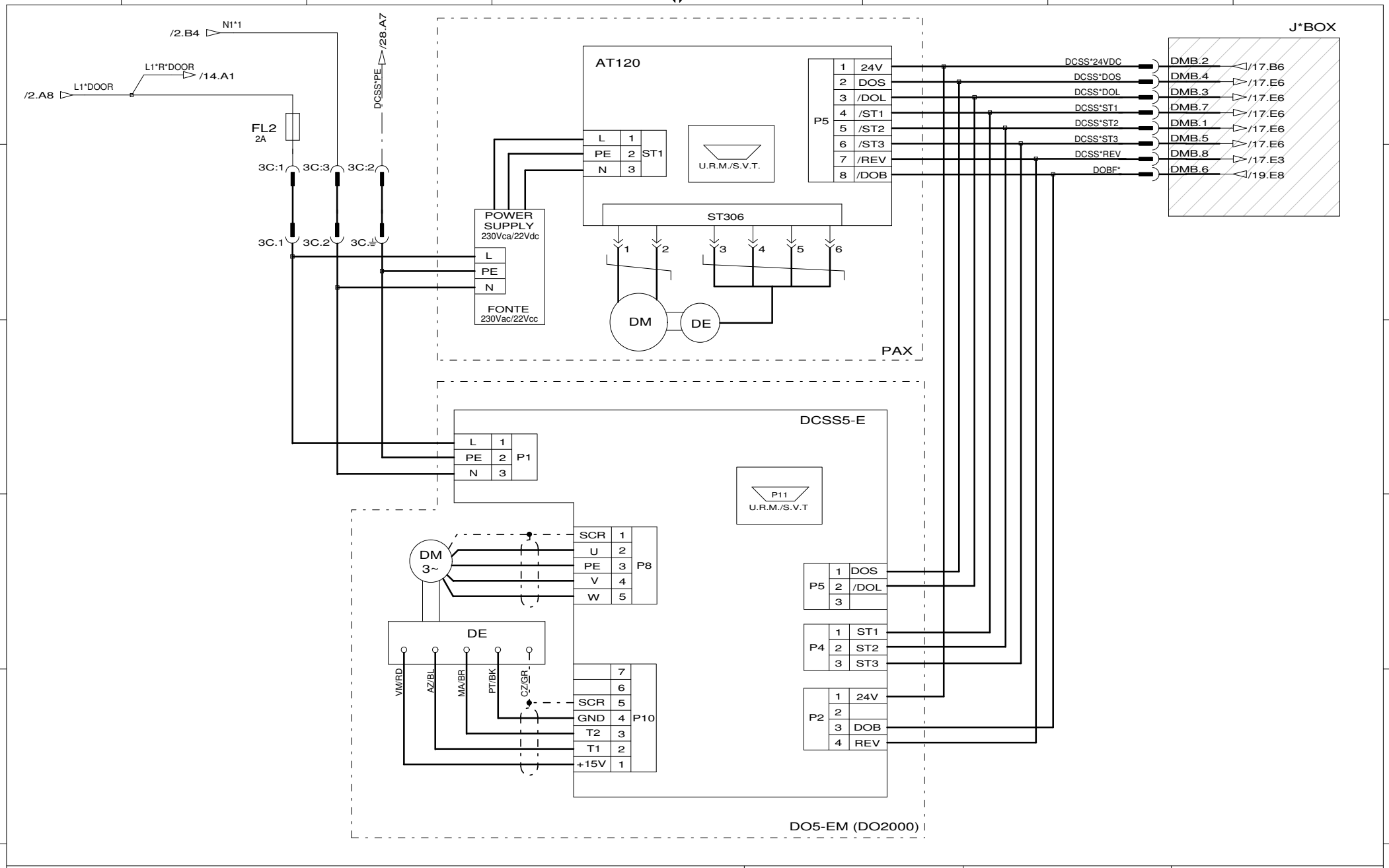

CHANGES

WARNING

THIS WORK AND THE INFORMATION IT CONTAINS ARE THE PROPERTY OF OTIS ELEVATOR COMPANY ("OTIS"). IT IS DELIVERED TO OTHERS ON THE EXPRESS CONDITION THAT IT WILL BE USED FOR, OR ON BEHALF OF, OTIS; THAT NEITHER IT NOR THE INFORMATION IT CONTAINS WILL BE REPRODUCED OR DISCLOSED, IN WHOLE OR IN PART, WITHOUT THE PRIOR WRITTEN CONCENT OF OTIS; AND THAT ON DEMAND IT AND ANY COPIES WILL BE PROMPTLY RETURNED TO OTIS.

UNPUBLISHED WORK © OTIS ELEVATOR COMPANY. ALL RIGHTS RESERVED

Otis
A United Technologies Company

Controller Wiring Diagram
Diagrama Elétrico do Controle

GeN2-Comfort / Regen-UD

DWG BAA21000H

OTIS ENGINEERING
SIT São Bernardo - BRAZIL

CUSTOMER:	DRAWN	Richard Horn	ORIGINAL DATE
	CHK	Richard Horn	29/02/2012
PROJECT:	APPD	Marcos Gomes	SHEETS
LOCATION:	AUTH	11/A-006	SHEET 13

DRAFTED IN ACCORDANCE WITH OTIS DOCUMENT 52847

Rev. 2011-03-24

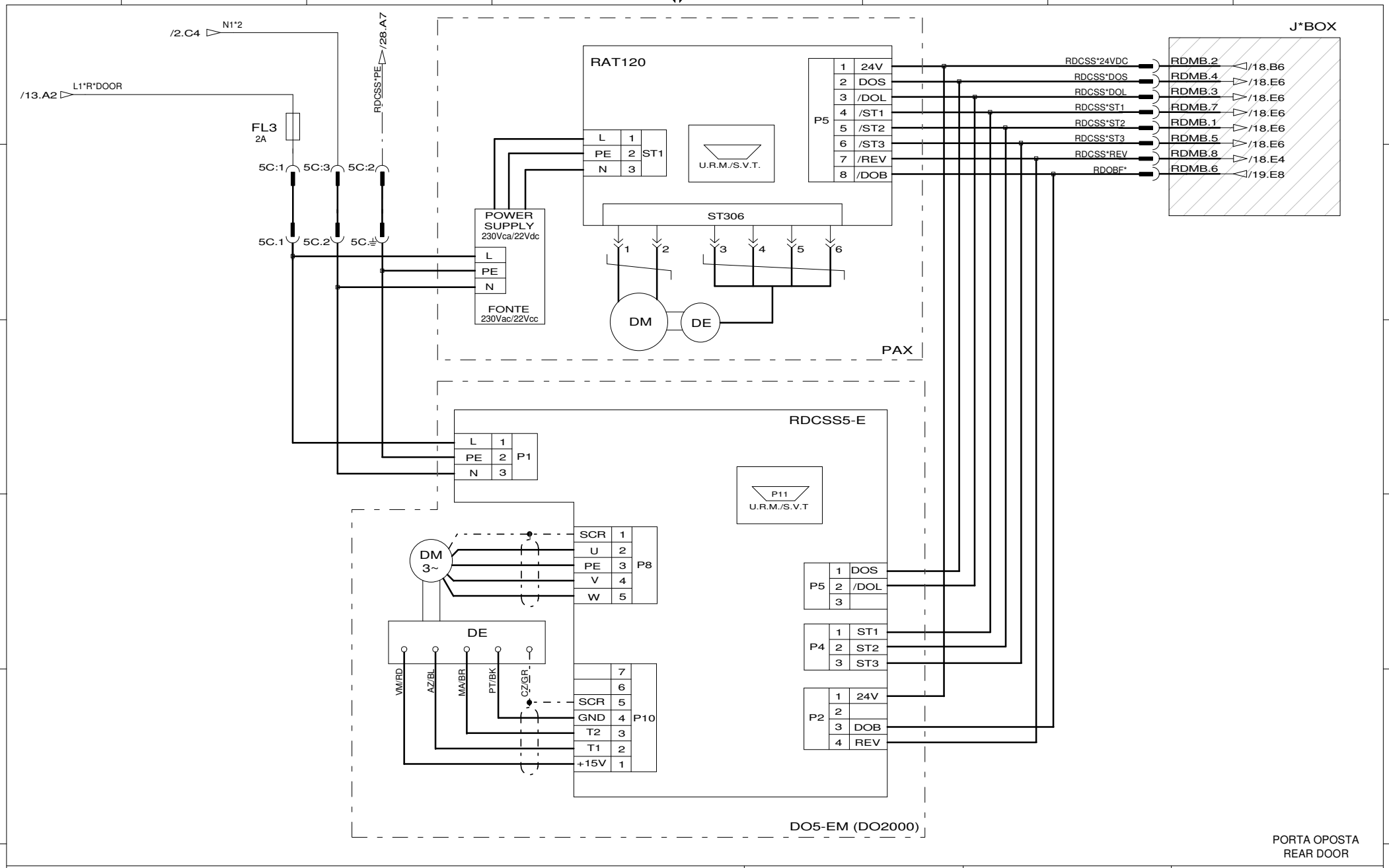

CHANGES

WARNING

THIS WORK AND THE INFORMATION IT CONTAINS ARE THE PROPERTY OF OTIS ELEVATOR COMPANY ("OTIS"). IT IS DELIVERED TO OTHERS ON THE EXPRESS CONDITION THAT IT WILL BE USED FOR, OR ON BEHALF OF, OTIS; THAT NEITHER IT NOR THE INFORMATION IT CONTAINS WILL BE REPRODUCED OR DISCLOSED, IN WHOLE OR IN PART, WITHOUT THE PRIOR WRITTEN CONCENT OF OTIS; AND THAT ON DEMAND IT AND ANY COPIES WILL BE PROMPTLY RETURNED TO OTIS.

UNPUBLISHED WORK © OTIS ELEVATOR COMPANY. ALL RIGHTS RESERVED

Otis
A United Technologies Company

Controller Wiring Diagram
Diagrama Elétrico do Controle

GeN2-Comfort / Regen-UD

DWG BAA21000H

OTIS ENGINEERING
SIT São Bernardo - BRAZIL

CUSTOMER:	DRAWN	Richard Horn	ORIGINAL DATE
	CHK	Richard Horn	29/02/2012
PROJECT:	APPD	Marcos Gomes	SHEETS
LOCATION:	AUTH	11/A-006	SHEET 14

DRAFTED IN ACCORDANCE WITH OTIS DOCUMENT 52847

Rev. 2011-03-24

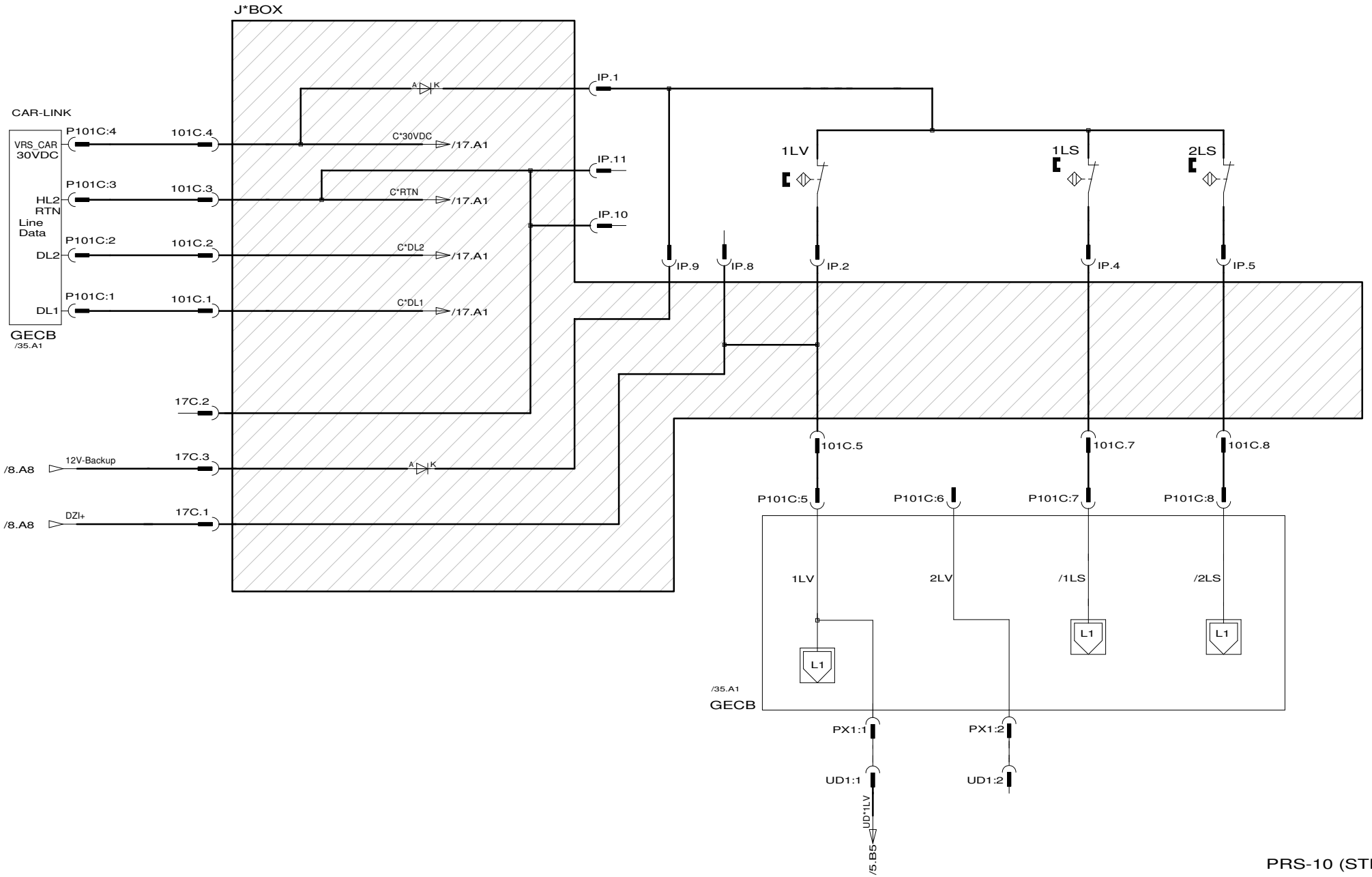

CHANGES

WARNING

THIS WORK AND THE INFORMATION IT CONTAINS ARE THE PROPERTY OF OTIS ELEVATOR COMPANY ("OTIS"). IT IS DELIVERED TO OTHERS ON THE EXPRESS CONDITION THAT IT WILL BE USED FOR, OR ON BEHALF OF, OTIS; THAT NEITHER IT NOR THE INFORMATION IT CONTAINS WILL BE REPRODUCED OR DISCLOSED, IN WHOLE OR IN PART, WITHOUT THE PRIOR WRITTEN CONCENT OF OTIS; AND THAT ON DEMAND IT AND ANY COPIES WILL BE PROMPTLY RETURNED TO OTIS.

UNPUBLISHED WORK © OTIS ELEVATOR COMPANY. ALL RIGHTS RESERVED

Otis
A United Technologies Company

Controller Wiring Diagram
Diagrama Elétrico do Controle

GeN2-Comfort / Regen-UD

DWG BAA21000H

OTIS ENGINEERING
SIT São Bernardo - BRAZIL

CUSTOMER:	DRAWN	Richard Horn	ORIGINAL DATE
	CHK	Richard Horn	29/02/2012
PROJECT:	APPD	Marcos Gomes	SHEETS
LOCATION:	AUTH	11/A-006	SHEET 15

DRAFTED IN ACCORDANCE WITH OTIS DOCUMENT 52847

Rev. 2011-03-24

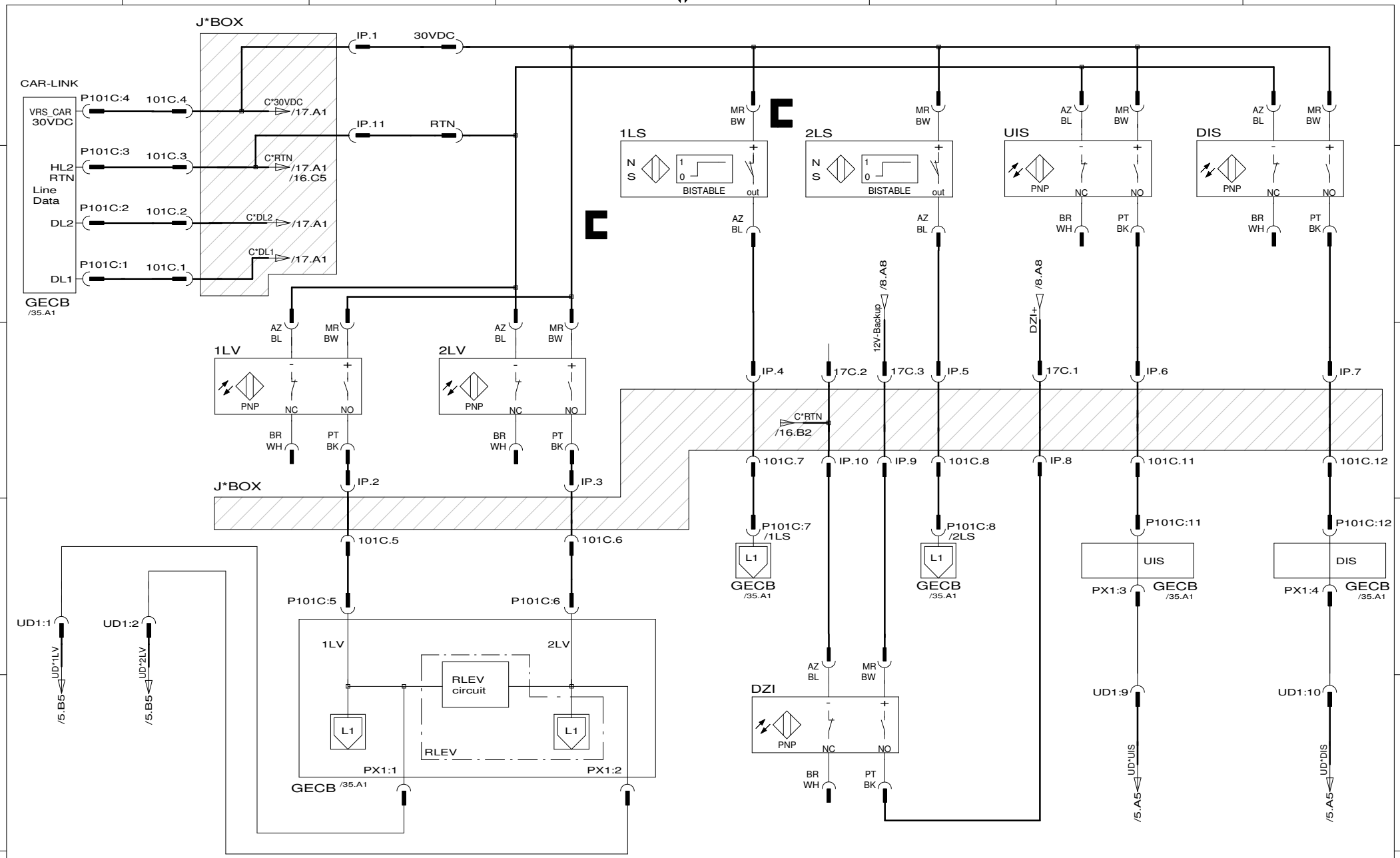

CHANGES

WARNING

THIS WORK AND THE INFORMATION IT CONTAINS ARE THE PROPERTY OF OTIS ELEVATOR COMPANY ("OTIS"). IT IS DELIVERED TO OTHERS ON THE EXPRESS CONDITION THAT IT WILL BE USED FOR, OR ON BEHALF OF, OTIS; THAT NEITHER IT NOR THE INFORMATION IT CONTAINS WILL BE REPRODUCED OR DISCLOSED, IN WHOLE OR IN PART, WITHOUT THE PRIOR WRITTEN CONCENT OF OTIS; AND THAT ON DEMAND IT AND ANY COPIES WILL BE PROMPTLY RETURNED TO OTIS.

UNPUBLISHED WORK © OTIS ELEVATOR COMPANY. ALL RIGHTS RESERVED

Otis
A United Technologies Company

Controller Wiring Diagram
Diagrama Elétrico do Controle

GeN2-Comfort / Regen-UD

DWG BAA21000H

OTIS ENGINEERING
SIT São Bernardo - BRAZIL

CUSTOMER:	DRAWN	Richard Horn	ORIGINAL DATE
	CHK	Richard Horn	29/02/2012
PROJECT:	APPD	Marcos Gomes	SHEETS
LOCATION:	AUTH	11/A-006	SHEET 16

DRAFTED IN ACCORDANCE WITH OTIS DOCUMENT 52847

Rev. 2011-03-24

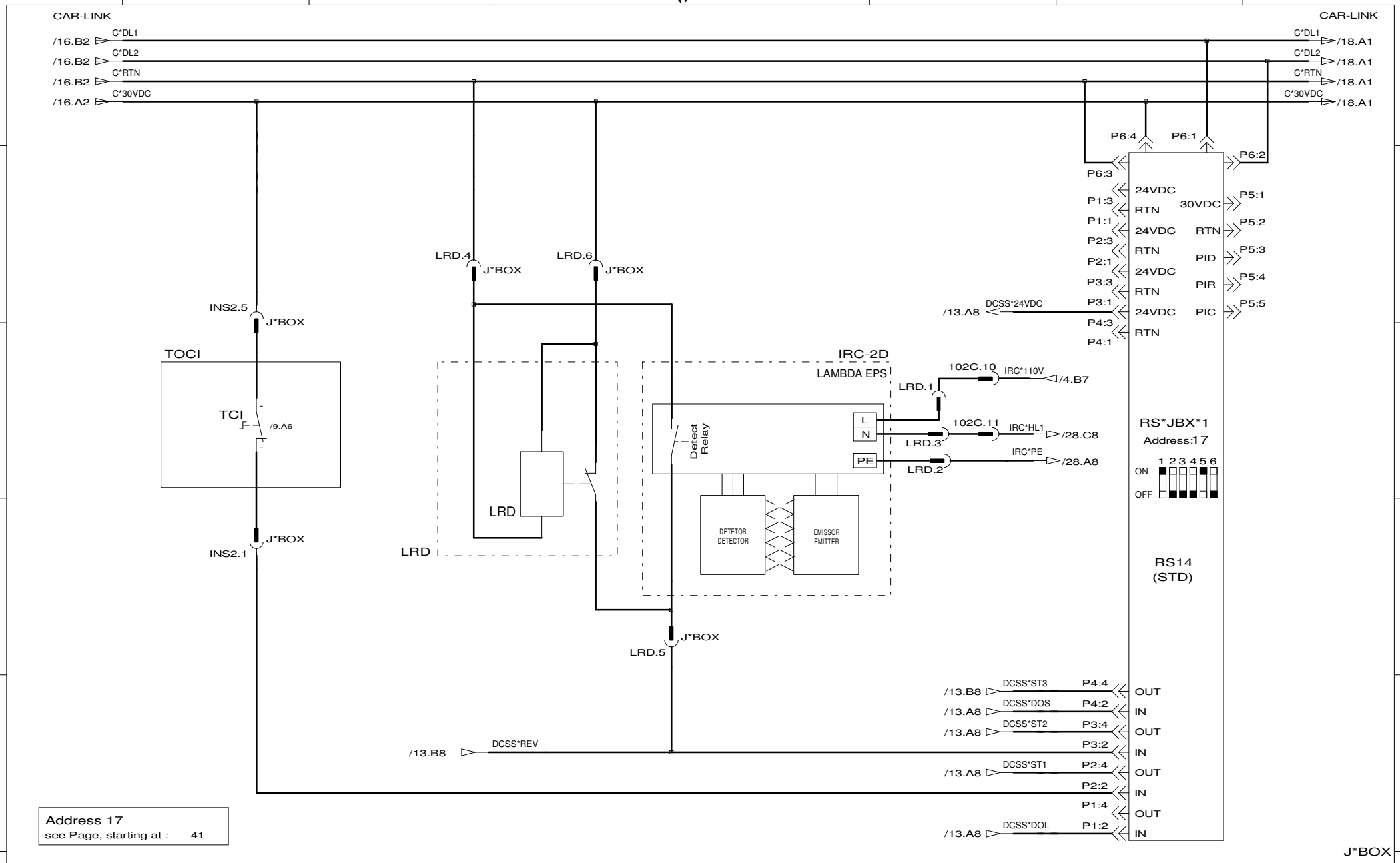

Address 17
see Page, starting at : 41

CHANGES

WARNING
THIS WORK AND THE INFORMATION IT CONTAINS ARE THE PROPERTY OF OTIS ELEVATOR COMPANY ("OTIS"). IT IS DELIVERED TO OTHERS ON THE EXPRESS CONDITION THAT IT WILL BE USED FOR, OR ON BEHALF OF, OTIS; THAT NEITHER IT NOR THE INFORMATION IT CONTAINS WILL BE REPRODUCED OR DISCLOSED, IN WHOLE OR IN PART, WITHOUT THE PRIOR WRITTEN CONCENT OF OTIS; AND THAT ON DEMAND IT AND ANY COPIES WILL BE PROMPTLY RETURNED TO OTIS.
UNPUBLISHED WORK © OTIS ELEVATOR COMPANY. ALL RIGHTS RESERVED

Otis
A United Technologies Company

Controller Wiring Diagram
Diagrama Elétrico do Controle
GeN2-Comfort / Regen-UD

DWG BAA21000H

OTIS ENGINEERING
SIT São Bernardo - BRAZIL

CUSTOMER:	DRAWN	Richard Horn	ORIGINAL DATE
	CHK	Richard Horn	29/02/2012
PROJECT:	APPD	Marcos Gomes	SHEETS
LOCATION:	AUTH	11/A-006	SHEET 17

DRAFTED IN ACCORDANCE WITH OTIS DOCUMENT 52847

Rev. 2011-03-24

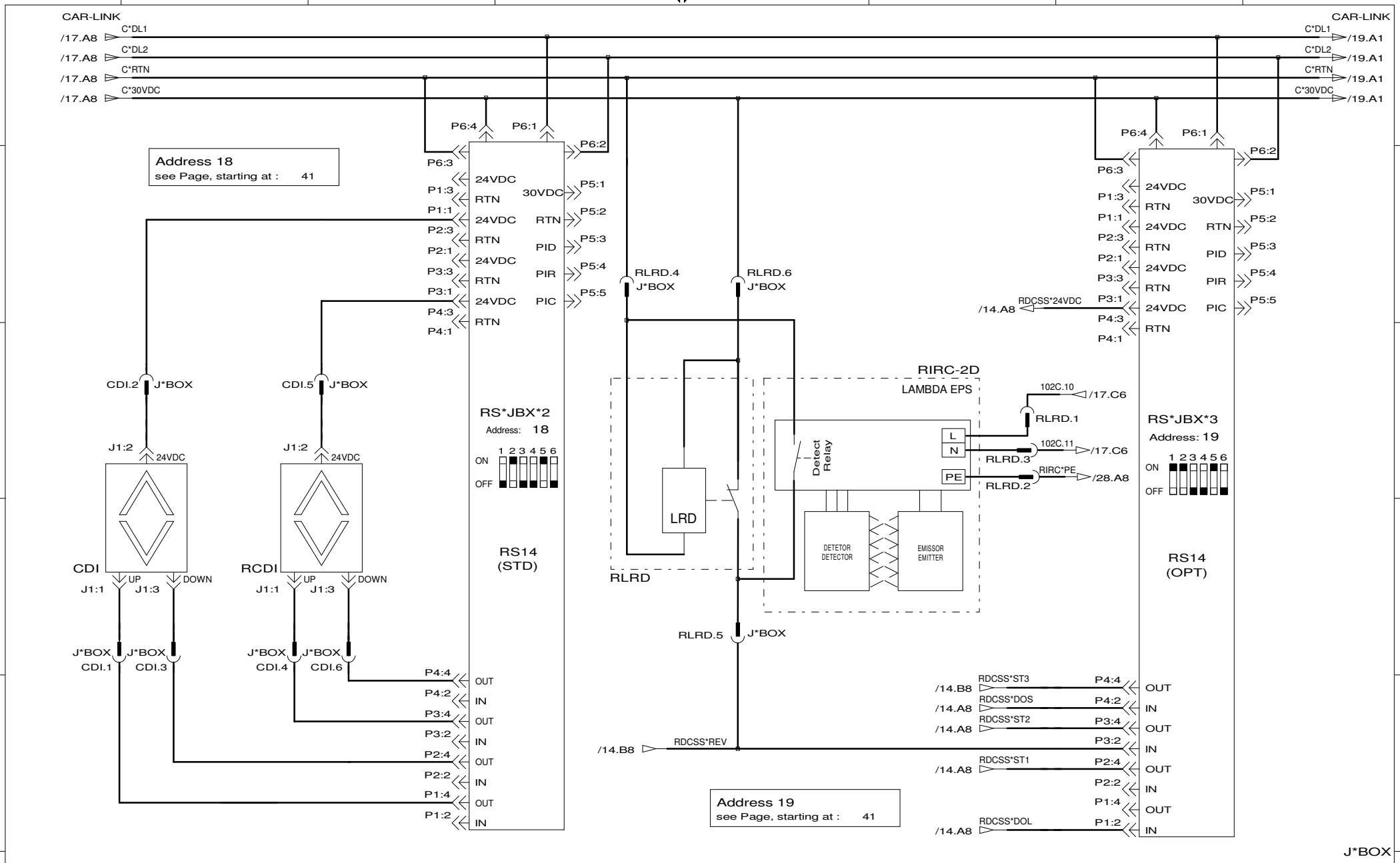

CHANGES

WARNING
THIS WORK AND THE INFORMATION IT CONTAINS ARE THE PROPERTY OF OTIS ELEVATOR COMPANY ("OTIS"). IT IS DELIVERED TO OTHERS ON THE EXPRESS CONDITION THAT IT WILL BE USED FOR, OR ON BEHALF OF, OTIS; THAT NEITHER IT NOR THE INFORMATION IT CONTAINS WILL BE REPRODUCED OR DISCLOSED, IN WHOLE OR IN PART, WITHOUT THE PRIOR WRITTEN CONCENT OF OTIS; AND THAT ON DEMAND IT AND ANY COPIES WILL BE PROMPTLY RETURNED TO OTIS.
UNPUBLISHED WORK © OTIS ELEVATOR COMPANY. ALL RIGHTS RESERVED

Otis
A United Technologies Company

Controller Wiring Diagram
Diagrama Elétrico do Controle
GeN2-Comfort / Regen-UD

DWG BAA21000H

OTIS ENGINEERING
SIT São Bernardo - BRAZIL

CUSTOMER:	DRAWN	Richard Horn	ORIGINAL DATE
	CHK	Richard Horn	29/02/2012
PROJECT:	APPD	Marcos Gomes	SHEETS
LOCATION:	AUTH	11/A-006	SHEET 18

DRAFTED IN ACCORDANCE WITH OTIS DOCUMENT 52847

Rev. 2011-03-24

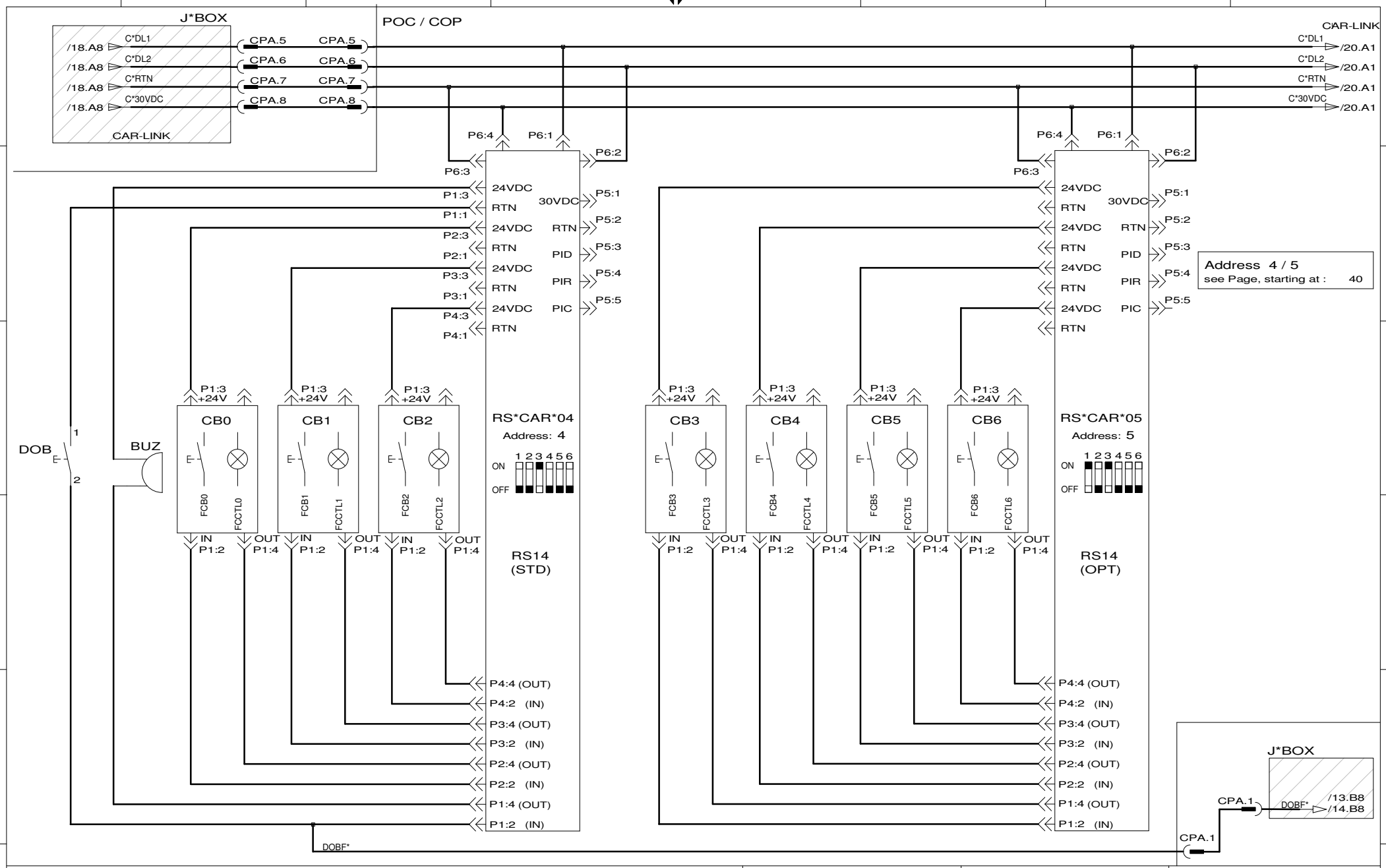

CHANGES

WARNING

THIS WORK AND THE INFORMATION IT CONTAINS ARE THE PROPERTY OF OTIS ELEVATOR COMPANY ("OTIS"). IT IS DELIVERED TO OTHERS ON THE EXPRESS CONDITION THAT IT WILL BE USED FOR, OR ON BEHALF OF, OTIS; THAT NEITHER IT NOR THE INFORMATION IT CONTAINS WILL BE REPRODUCED OR DISCLOSED, IN WHOLE OR IN PART, WITHOUT THE PRIOR WRITTEN CONCENT OF OTIS; AND THAT ON DEMAND IT AND ANY COPIES WILL BE PROMPTLY RETURNED TO OTIS.

UNPUBLISHED WORK © OTIS ELEVATOR COMPANY. ALL RIGHTS RESERVED

Otis
A United Technologies Company

Controller Wiring Diagram
Diagrama Elétrico do Controle

GeN2-Comfort / Regen-UD

DWG BAA21000H

OTIS ENGINEERING
SIT São Bernardo - BRAZIL

CUSTOMER:	DRAWN	Richard Horn	ORIGINAL DATE
	CHK	Richard Horn	29/02/2012
PROJECT:	APPD	Marcos Gomes	SHEETS
LOCATION:	AUTH	11/A-006	SHEET 19

DRAFTED IN ACCORDANCE WITH OTIS DOCUMENT 52847

Rev. 2011-03-24

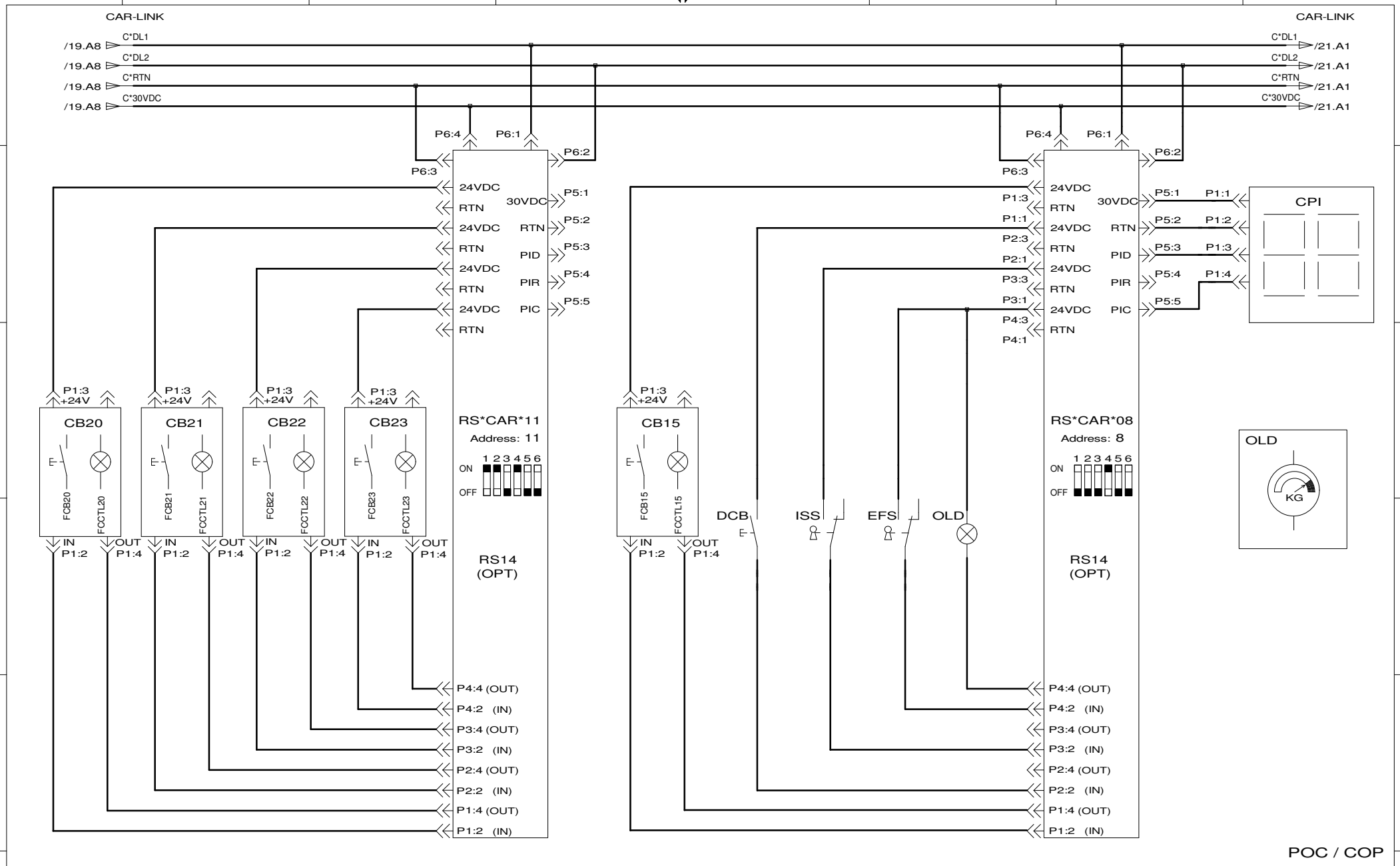

CHANGES

WARNING

THIS WORK AND THE INFORMATION IT CONTAINS ARE THE PROPERTY OF OTIS ELEVATOR COMPANY ("OTIS"). IT IS DELIVERED TO OTHERS ON THE EXPRESS CONDITION THAT IT WILL BE USED FOR, OR ON BEHALF OF, OTIS; THAT NEITHER IT NOR THE INFORMATION IT CONTAINS WILL BE REPRODUCED OR DISCLOSED, IN WHOLE OR IN PART, WITHOUT THE PRIOR WRITTEN CONCENT OF OTIS; AND THAT ON DEMAND IT AND ANY COPIES WILL BE PROMPTLY RETURNED TO OTIS.

UNPUBLISHED WORK © OTIS ELEVATOR COMPANY. ALL RIGHTS RESERVED

Otis
A United Technologies Company

Controller Wiring Diagram
Diagrama Elétrico do Controle

GeN2-Comfort / Regen-UD

DWG BAA21000H

OTIS ENGINEERING
SIT São Bernardo - BRAZIL

CUSTOMER:	DRAWN	Richard Horn	ORIGINAL DATE
	CHK	Richard Horn	29/02/2012
PROJECT:	APPD	Marcos Gomes	SHEETS
LOCATION:	AUTH	11/A-006	SHEET 20

DRAFTED IN ACCORDANCE WITH OTIS DOCUMENT 52847

Rev. 2011-03-24

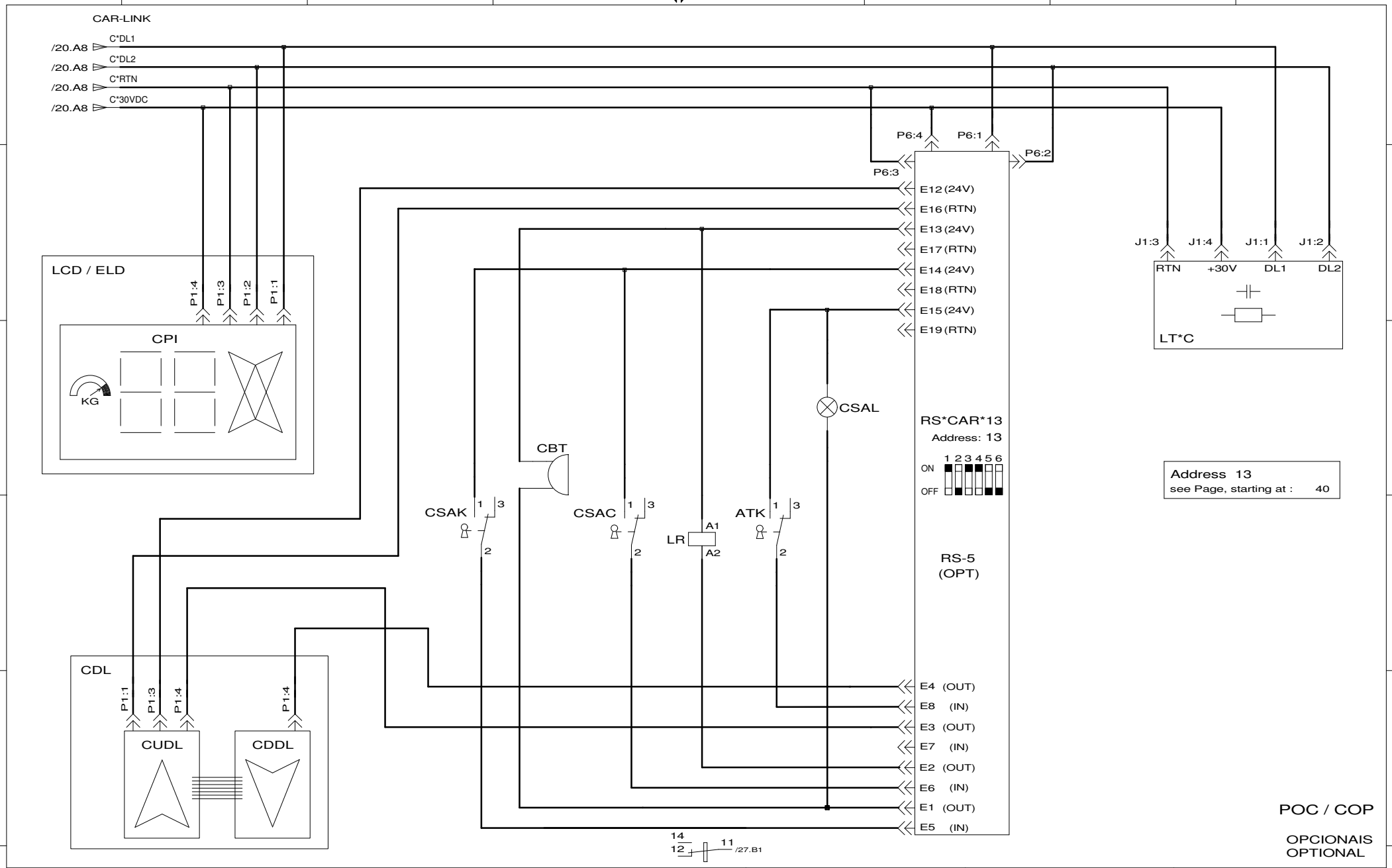

CHANGES

WARNING

THIS WORK AND THE INFORMATION IT CONTAINS ARE THE PROPERTY OF OTIS ELEVATOR COMPANY ("OTIS"). IT IS DELIVERED TO OTHERS ON THE EXPRESS CONDITION THAT IT WILL BE USED FOR, OR ON BEHALF OF, OTIS; THAT NEITHER IT NOR THE INFORMATION IT CONTAINS WILL BE REPRODUCED OR DISCLOSED, IN WHOLE OR IN PART, WITHOUT THE PRIOR WRITTEN CONCENT OF OTIS; AND THAT ON DEMAND IT AND ANY COPIES WILL BE PROMPTLY RETURNED TO OTIS.

UNPUBLISHED WORK © OTIS ELEVATOR COMPANY. ALL RIGHTS RESERVED

Otis
A United Technologies Company

Controller Wiring Diagram
Diagrama Elétrico do Controle

GeN2-Comfort / Regen-UD

DWG BAA21000H

OTIS ENGINEERING
SIT São Bernardo - BRAZIL

CUSTOMER:	DRAWN	Richard Horn	ORIGINAL DATE
	CHK	Richard Horn	29/02/2012
PROJECT:	APPD	Marcos Gomes	SHEETS
LOCATION:	AUTH	11/A-006	SHEET 21

DRAFTED IN ACCORDANCE WITH OTIS DOCUMENT 52847

Rev. 2011-03-24

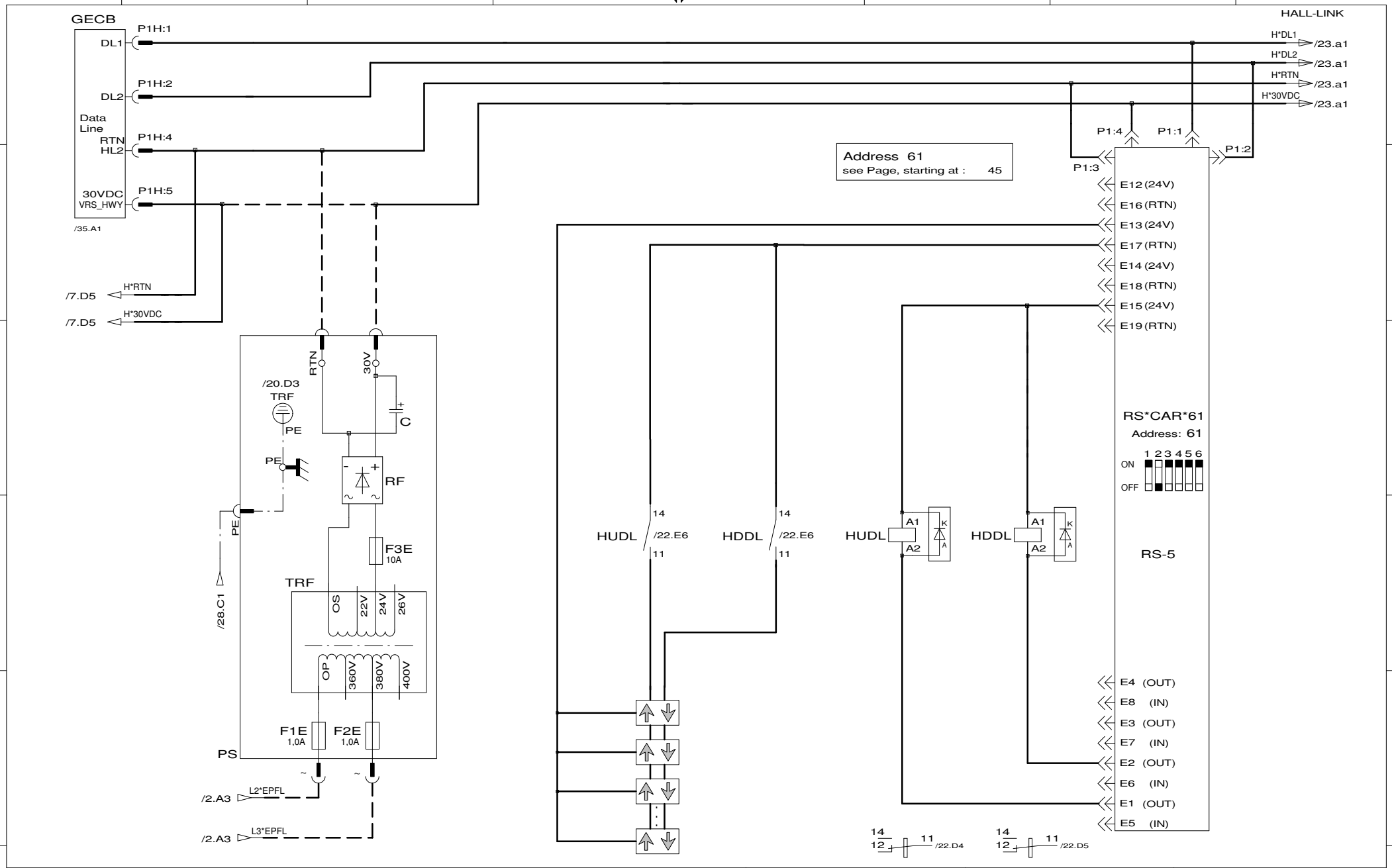

CHANGES

WARNING

THIS WORK AND THE INFORMATION IT CONTAINS ARE THE PROPERTY OF OTIS ELEVATOR COMPANY ("OTIS"). IT IS DELIVERED TO OTHERS ON THE EXPRESS CONDITION THAT IT WILL BE USED FOR, OR ON BEHALF OF, OTIS; THAT NEITHER IT NOR THE INFORMATION IT CONTAINS WILL BE REPRODUCED OR DISCLOSED, IN WHOLE OR IN PART, WITHOUT THE PRIOR WRITTEN CONCENT OF OTIS; AND THAT ON DEMAND IT AND ANY COPIES WILL BE PROMPTLY RETURNED TO OTIS.

UNPUBLISHED WORK © OTIS ELEVATOR COMPANY. ALL RIGHTS RESERVED

Otis
A United Technologies Company

Controller Wiring Diagram
Diagrama Elétrico do Controle

GeN2-Comfort / Regen-UD

DWG BAA21000H

OTIS ENGINEERING
SIT São Bernardo - BRAZIL

CUSTOMER:	DRAWN	Richard Horn	ORIGINAL DATE
	CHK	Richard Horn	29/02/2012
PROJECT:	APPD	Marcos Gomes	SHEETS
LOCATION:	AUTH	11/A-006	SHEET 22

Rev. 2011-03-24

DRAFTED IN ACCORDANCE WITH OTIS DOCUMENT 52847

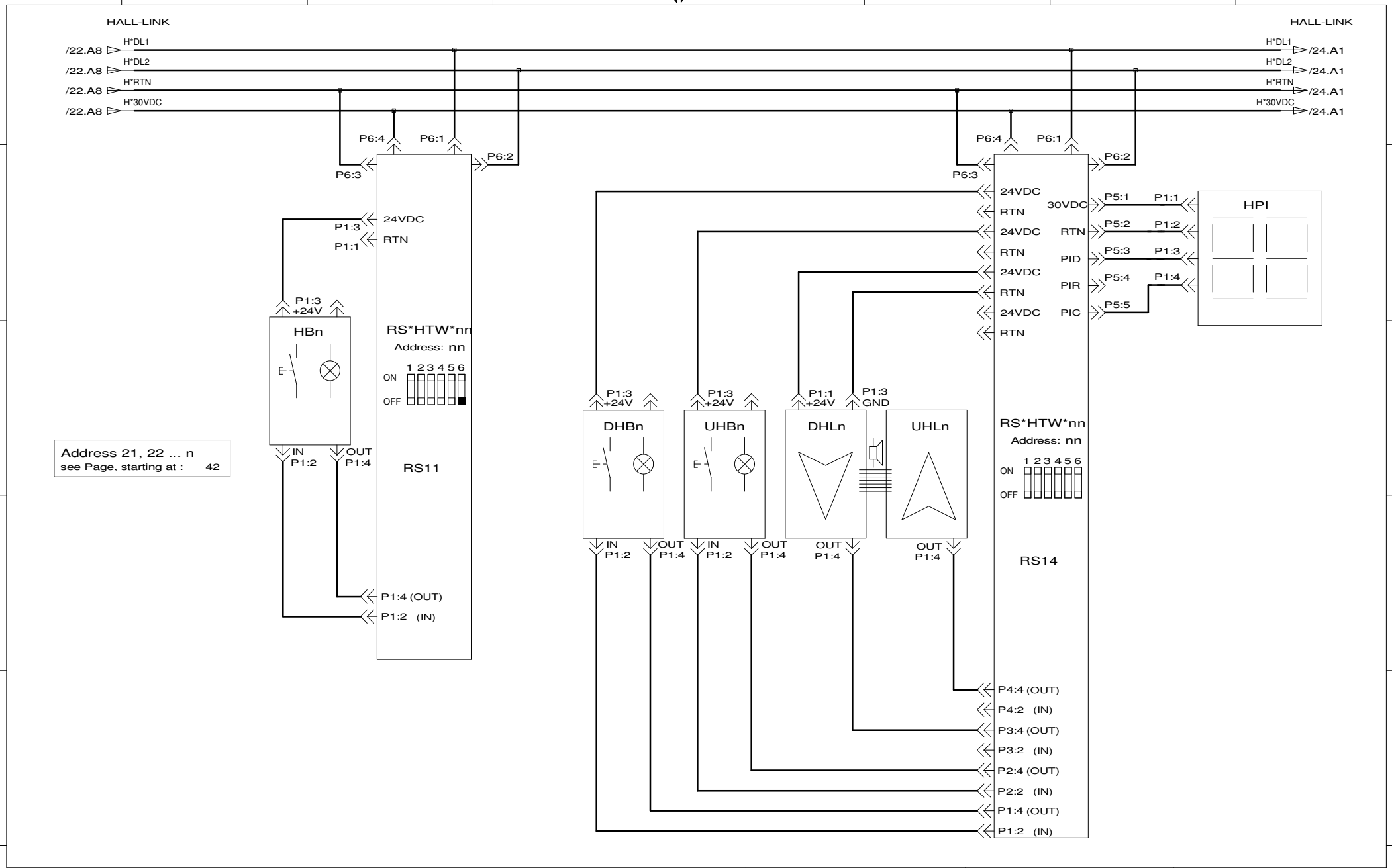

CHANGES

WARNING

THIS WORK AND THE INFORMATION IT CONTAINS ARE THE PROPERTY OF OTIS ELEVATOR COMPANY ("OTIS"). IT IS DELIVERED TO OTHERS ON THE EXPRESS CONDITION THAT IT WILL BE USED FOR, OR ON BEHALF OF, OTIS; THAT NEITHER IT NOR THE INFORMATION IT CONTAINS WILL BE REPRODUCED OR DISCLOSED, IN WHOLE OR IN PART, WITHOUT THE PRIOR WRITTEN CONCENT OF OTIS; AND THAT ON DEMAND IT AND ANY COPIES WILL BE PROMPTLY RETURNED TO OTIS.

UNPUBLISHED WORK © OTIS ELEVATOR COMPANY. ALL RIGHTS RESERVED

Otis
A United Technologies Company

Controller Wiring Diagram
Diagrama Elétrico do Controle

GeN2-Comfort / Regen-UD

DWG BAA21000H

OTIS ENGINEERING
SIT São Bernardo - BRAZIL

CUSTOMER:	DRAWN	Richard Horn	ORIGINAL DATE
	CHK	Richard Horn	29/02/2012
PROJECT:	APPD	Marcos Gomes	SHEETS
LOCATION:	AUTH	11/A-006	SHEET 23

DRAFTED IN ACCORDANCE WITH OTIS DOCUMENT 52847

Rev. 2011-03-24

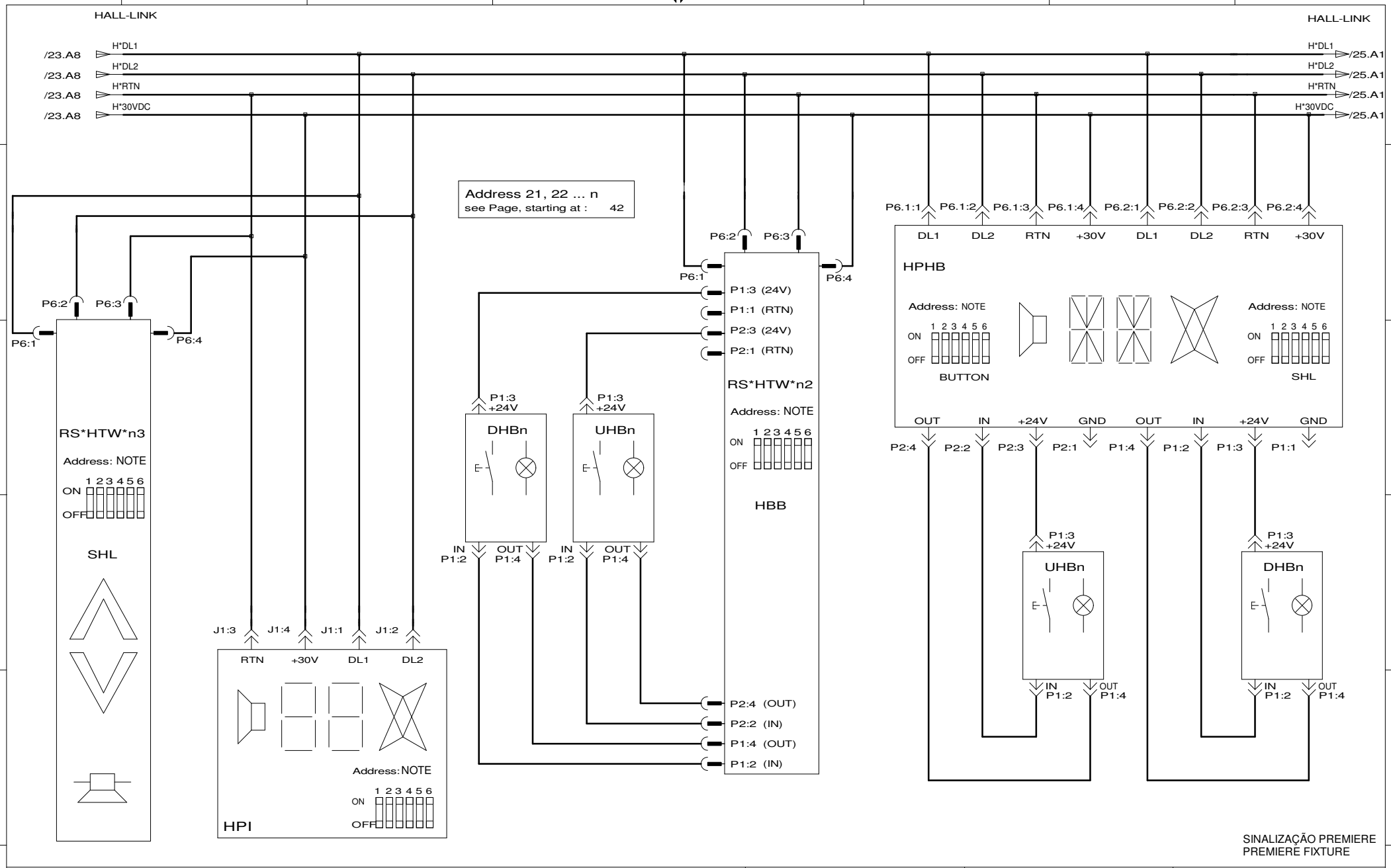

SINALIZAÇÃO PREMIERE
PREMIERE FIXTURE

CHANGES

WARNING

THIS WORK AND THE INFORMATION IT CONTAINS ARE THE PROPERTY OF OTIS ELEVATOR COMPANY ("OTIS"). IT IS DELIVERED TO OTHERS ON THE EXPRESS CONDITION THAT IT WILL BE USED FOR, OR ON BEHALF OF, OTIS; THAT NEITHER IT NOR THE INFORMATION IT CONTAINS WILL BE REPRODUCED OR DISCLOSED, IN WHOLE OR IN PART, WITHOUT THE PRIOR WRITTEN CONCENT OF OTIS; AND THAT ON DEMAND IT AND ANY COPIES WILL BE PROMPTLY RETURNED TO OTIS.

UNPUBLISHED WORK © OTIS ELEVATOR COMPANY. ALL RIGHTS RESERVED

Otis
A United Technologies Company

Controller Wiring Diagram
Diagrama Elétrico do Controle

GeN2-Comfort / Regen-UD

DWG BAA21000H

OTIS ENGINEERING
SIT São Bernardo - BRAZIL

CUSTOMER:	DRAWN	Richard Horn	ORIGINAL DATE
	CHK	Richard Horn	29/02/2012
PROJECT:	APPD	Marcos Gomes	SHEETS
LOCATION:	AUTH	11/A-006	SHEET 24

DRAFTED IN ACCORDANCE WITH OTIS DOCUMENT 52847

Rev. 2011-03-24

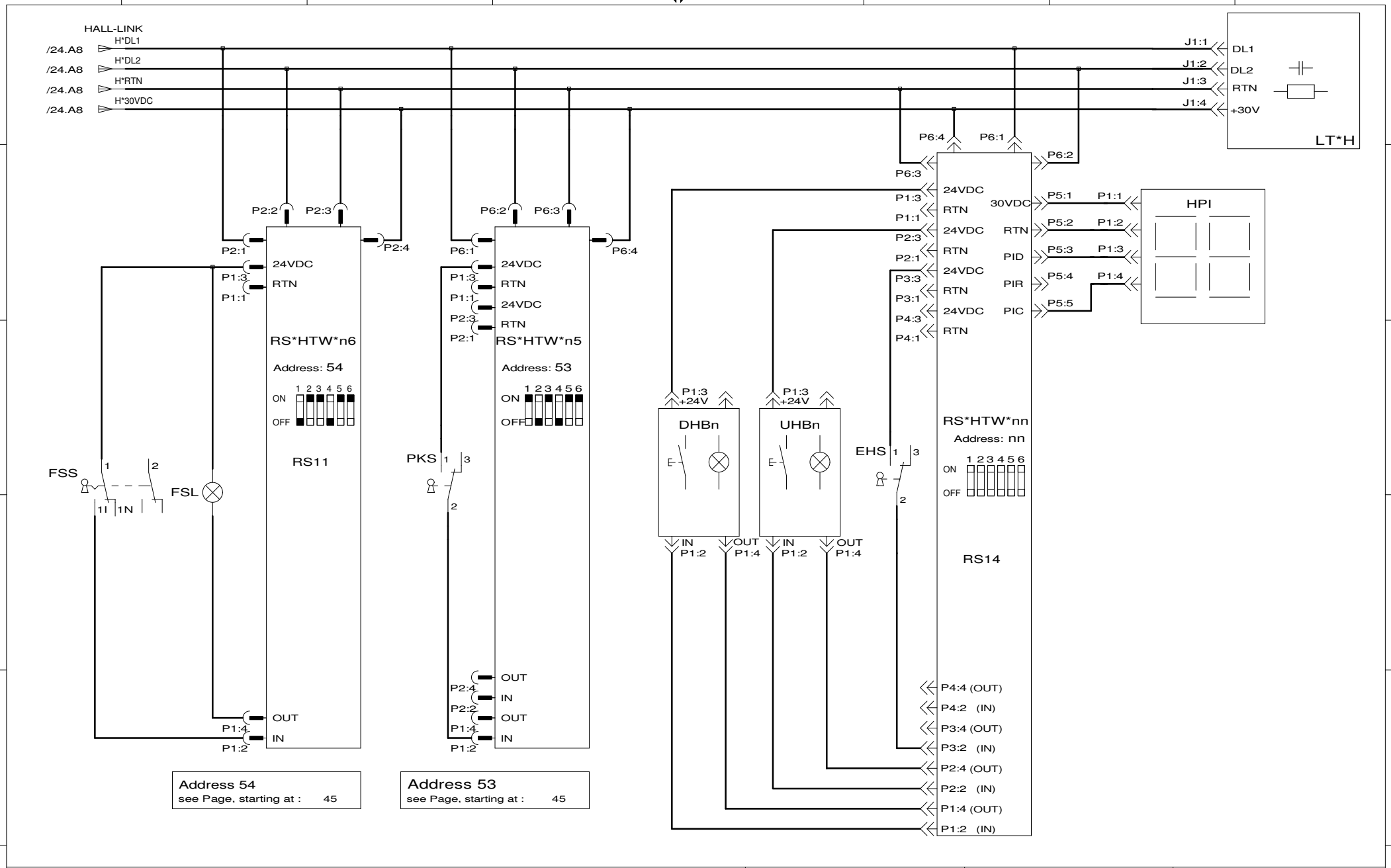

CHANGES

WARNING

THIS WORK AND THE INFORMATION IT CONTAINS ARE THE PROPERTY OF OTIS ELEVATOR COMPANY ("OTIS"). IT IS DELIVERED TO OTHERS ON THE EXPRESS CONDITION THAT IT WILL BE USED FOR, OR ON BEHALF OF, OTIS; THAT NEITHER IT NOR THE INFORMATION IT CONTAINS WILL BE REPRODUCED OR DISCLOSED, IN WHOLE OR IN PART, WITHOUT THE PRIOR WRITTEN CONCENT OF OTIS; AND THAT ON DEMAND IT AND ANY COPIES WILL BE PROMPTLY RETURNED TO OTIS.

UNPUBLISHED WORK © OTIS ELEVATOR COMPANY. ALL RIGHTS RESERVED

Otis
A United Technologies Company

Controller Wiring Diagram
Diagrama Elétrico do Controle

GeN2-Comfort / Regen-UD

DWG BAA21000H

OTIS ENGINEERING
SIT São Bernardo - BRAZIL

CUSTOMER:	DRAWN	Richard Horn	ORIGINAL DATE
	CHK	Richard Horn	29/02/2012
PROJECT:	APPD	Marcos Gomes	SHEETS
LOCATION:	AUTH	11/A-006	SHEET 25

DRAFTED IN ACCORDANCE WITH OTIS DOCUMENT 52847

Rev. 2011-03-24

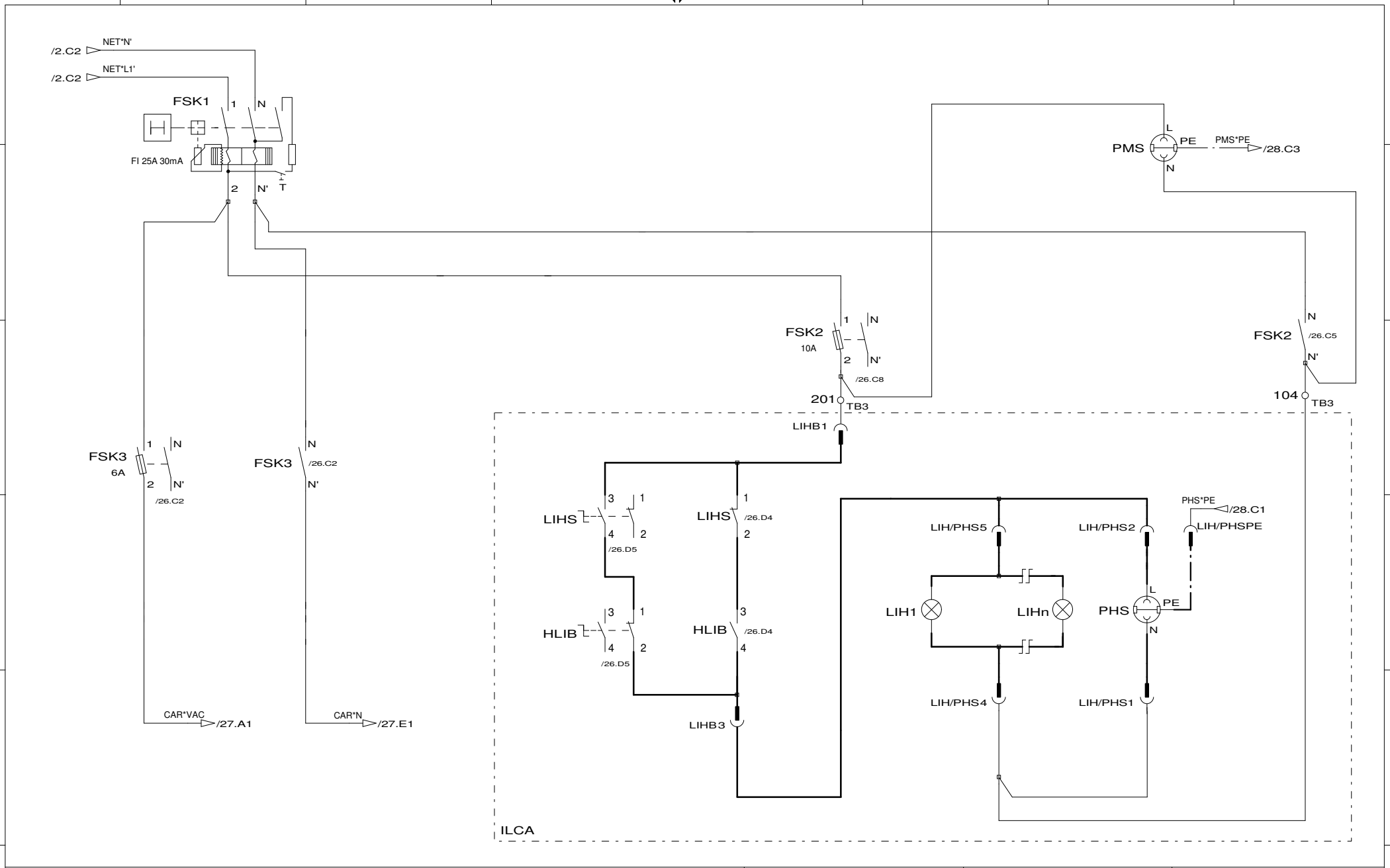

CHANGES

WARNING

THIS WORK AND THE INFORMATION IT CONTAINS ARE THE PROPERTY OF OTIS ELEVATOR COMPANY ("OTIS"). IT IS DELIVERED TO OTHERS ON THE EXPRESS CONDITION THAT IT WILL BE USED FOR, OR ON BEHALF OF, OTIS; THAT NEITHER IT NOR THE INFORMATION IT CONTAINS WILL BE REPRODUCED OR DISCLOSED, IN WHOLE OR IN PART, WITHOUT THE PRIOR WRITTEN CONCENT OF OTIS; AND THAT ON DEMAND IT AND ANY COPIES WILL BE PROMPTLY RETURNED TO OTIS.

UNPUBLISHED WORK © OTIS ELEVATOR COMPANY. ALL RIGHTS RESERVED

Otis
A United Technologies Company

Controller Wiring Diagram
Diagrama Elétrico do Controle

GeN2-Comfort / Regen-UD

DWG BAA21000H

OTIS ENGINEERING
SIT São Bernardo - BRAZIL

CUSTOMER:	DRAWN	Richard Horn	ORIGINAL DATE
	CHK	Richard Horn	29/02/2012
PROJECT:	APPD	Marcos Gomes	SHEETS
LOCATION:	AUTH	11/A-006	SHEET 26

DRAFTED IN ACCORDANCE WITH OTIS DOCUMENT 52847

Rev. 2011-03-24

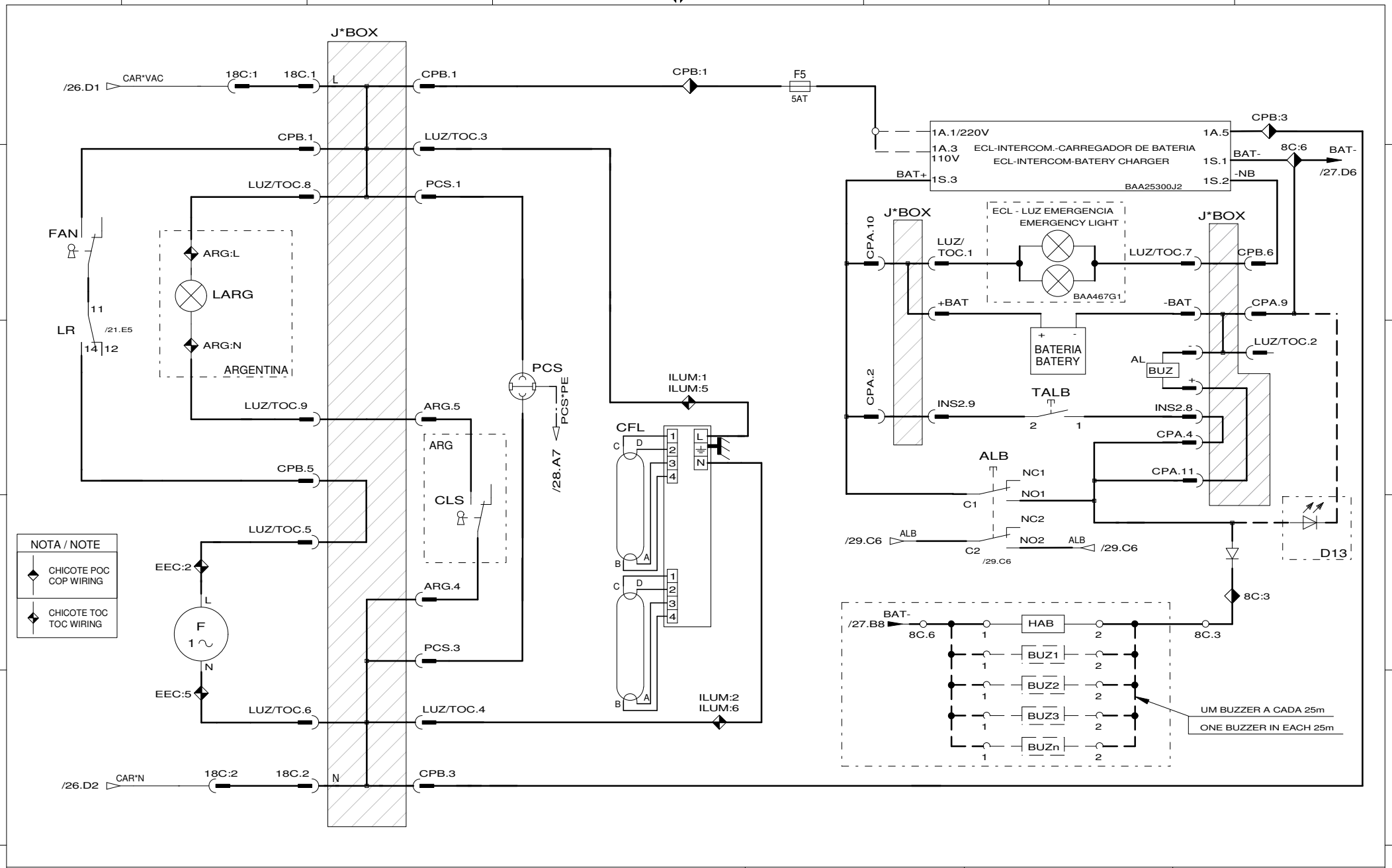

CHANGES

WARNING
THIS WORK AND THE INFORMATION IT CONTAINS ARE THE PROPERTY OF OTIS ELEVATOR COMPANY ("OTIS"). IT IS DELIVERED TO OTHERS ON THE EXPRESS CONDITION THAT IT WILL BE USED FOR, OR ON BEHALF OF, OTIS; THAT NEITHER IT NOR THE INFORMATION IT CONTAINS WILL BE REPRODUCED OR DISCLOSED, IN WHOLE OR IN PART, WITHOUT THE PRIOR WRITTEN CONCENT OF OTIS; AND THAT ON DEMAND IT AND ANY COPIES WILL BE PROMPTLY RETURNED TO OTIS.
UNPUBLISHED WORK © OTIS ELEVATOR COMPANY. ALL RIGHTS RESERVED

Otis
A United Technologies Company

Controller Wiring Diagram
Diagrama Elétrico do Controle
GeN2-Comfort / Regen-UD

DWG BAA21000H

OTIS ENGINEERING
SIT São Bernardo - BRAZIL

CUSTOMER:	DRAWN	Richard Horn	ORIGINAL DATE
	CHK	Richard Horn	29/02/2012
PROJECT:	APPD	Marcos Gomes	SHEETS
LOCATION:	AUTH	11/A-006	SHEET 27

DRAFTED IN ACCORDANCE WITH OTIS DOCUMENT 52847

Rev. 2011-03-24

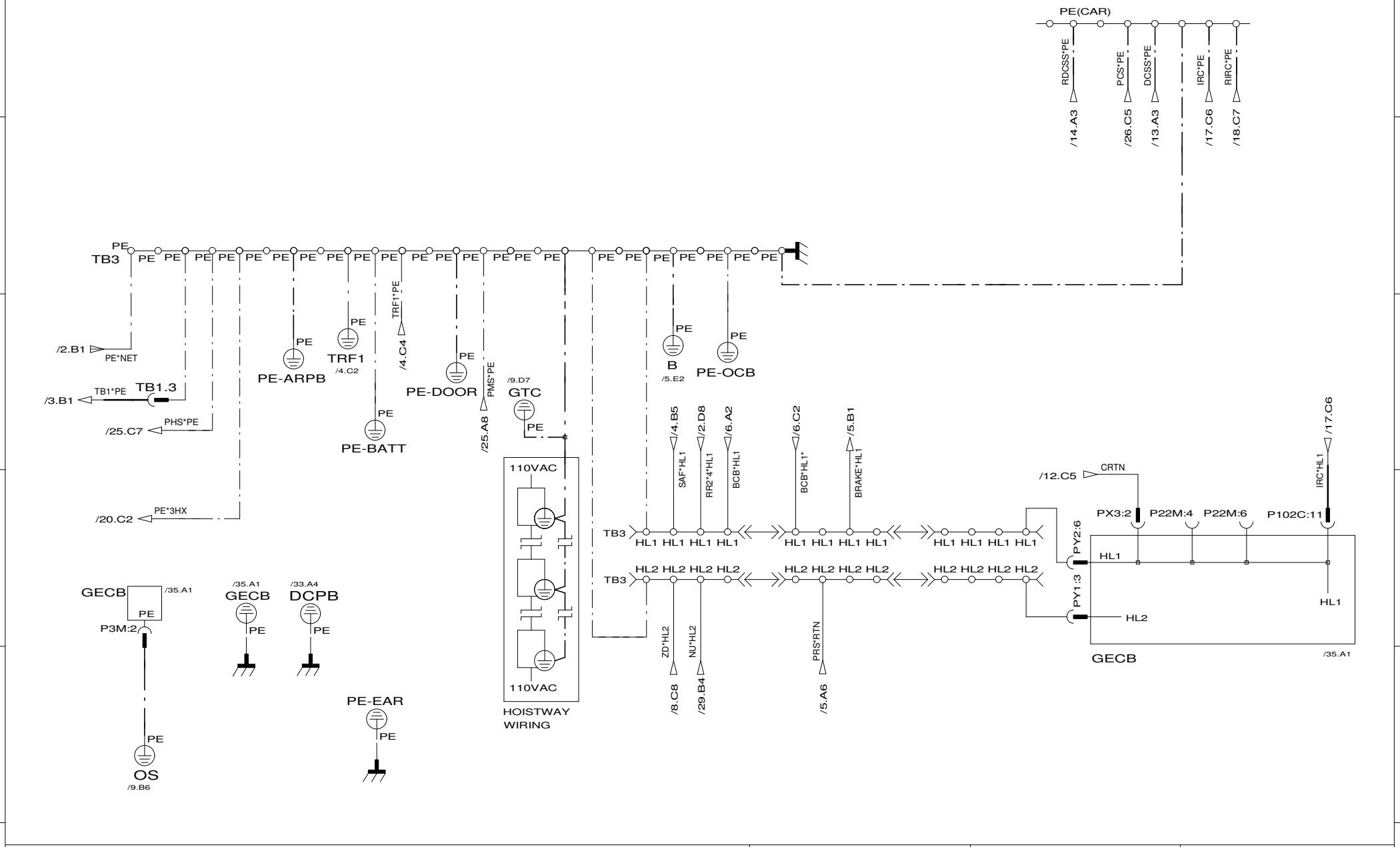

CHANGES

WARNING

THIS WORK AND THE INFORMATION IT CONTAINS ARE THE PROPERTY OF OTIS ELEVATOR COMPANY ("OTIS"). IT IS DELIVERED TO OTHERS ON THE EXPRESS CONDITION THAT IT WILL BE USED FOR, OR ON BEHALF OF, OTIS; THAT NEITHER IT NOR THE INFORMATION IT CONTAINS WILL BE REPRODUCED OR DISCLOSED, IN WHOLE OR IN PART, WITHOUT THE PRIOR WRITTEN CONCENT OF OTIS; AND THAT ON DEMAND IT AND ANY COPIES WILL BE PROMPTLY RETURNED TO OTIS.

UNPUBLISHED WORK © OTIS ELEVATOR COMPANY. ALL RIGHTS RESERVED

Otis
A United Technologies Company

Controller Wiring Diagram
Diagrama Elétrico do Controle

GeN2-Comfort / Regen-UD

DWG BAA21000H

OTIS ENGINEERING
SIT São Bernardo - BRAZIL

CUSTOMER:	DRAWN	Richard Horn	ORIGINAL DATE
	CHK	Richard Horn	29/02/2012
PROJECT:	APPD	Marcos Gomes	SHEETS
LOCATION:	AUTH	11/A-006	SHEET 28

DRAFTED IN ACCORDANCE WITH OTIS DOCUMENT 52847

Rev. 2011-03-24

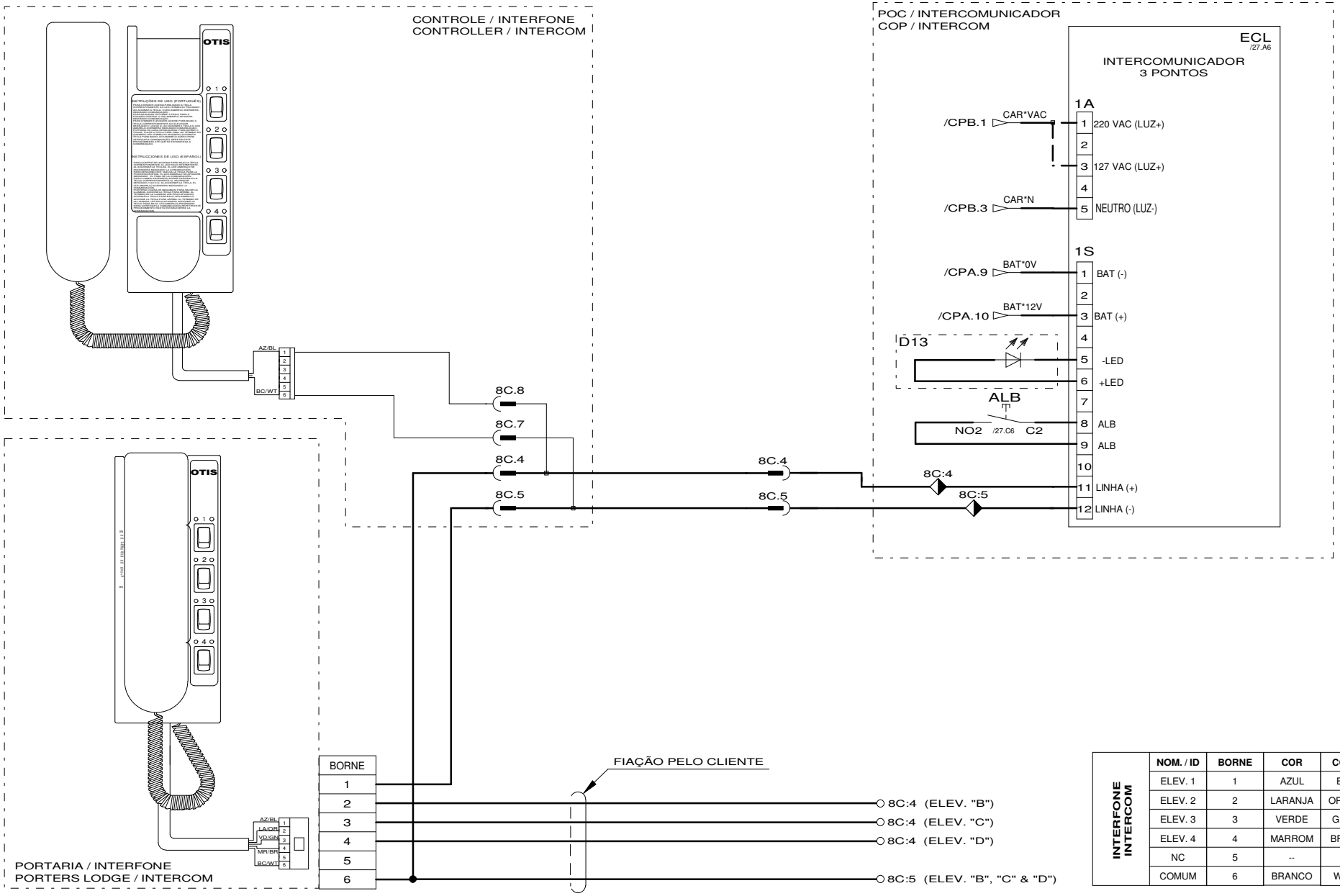

INTERFONE INTERCOM	NOM. / ID	BORNE	COR	COLOR
	ELEV. 1	1	AZUL	BLUE
	ELEV. 2	2	LARANJA	ORANGE
	ELEV. 3	3	VERDE	GREEN
	ELEV. 4	4	MARROM	BROWN
	NC	5	--	--
	COMUM	6	BRANCO	WHITE

CHANGES

WARNING

THIS WORK AND THE INFORMATION IT CONTAINS ARE THE PROPERTY OF OTIS ELEVATOR COMPANY ("OTIS"). IT IS DELIVERED TO OTHERS ON THE EXPRESS CONDITION THAT IT WILL BE USED FOR, OR ON BEHALF OF, OTIS; THAT NEITHER IT NOR THE INFORMATION IT CONTAINS WILL BE REPRODUCED OR DISCLOSED, IN WHOLE OR IN PART, WITHOUT THE PRIOR WRITTEN CONCENT OF OTIS; AND THAT ON DEMAND IT AND ANY COPIES WILL BE PROMPTLY RETURNED TO OTIS.

UNPUBLISHED WORK © OTIS ELEVATOR COMPANY. ALL RIGHTS RESERVED

Otis
A United Technologies Company

Controller Wiring Diagram
Diagrama Elétrico do Controle

GeN2-Comfort / Regen-UD

DWG BAA21000H

OTIS ENGINEERING
SIT São Bernardo - BRAZIL

CUSTOMER:	DRAWN	Richard Horn	ORIGINAL DATE
	CHK	Richard Horn	29/02/2012
PROJECT:	APPD	Marcos Gomes	SHEETS
LOCATION:	AUTH	11/A-006	SHEET 29

DRAFTED IN ACCORDANCE WITH OTIS DOCUMENT 52847

Rev. 2011-03-24

INFORMAÇÕES GERAIS
GENERAL INFORMATION

SIMPLEX & SBR

Princípio das linhas de transmissão de dados
Principle of data transmission lines

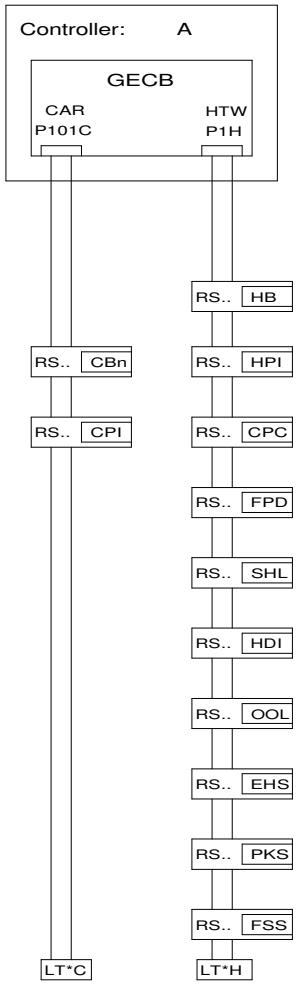

Line type for DL1,DL2

EPO

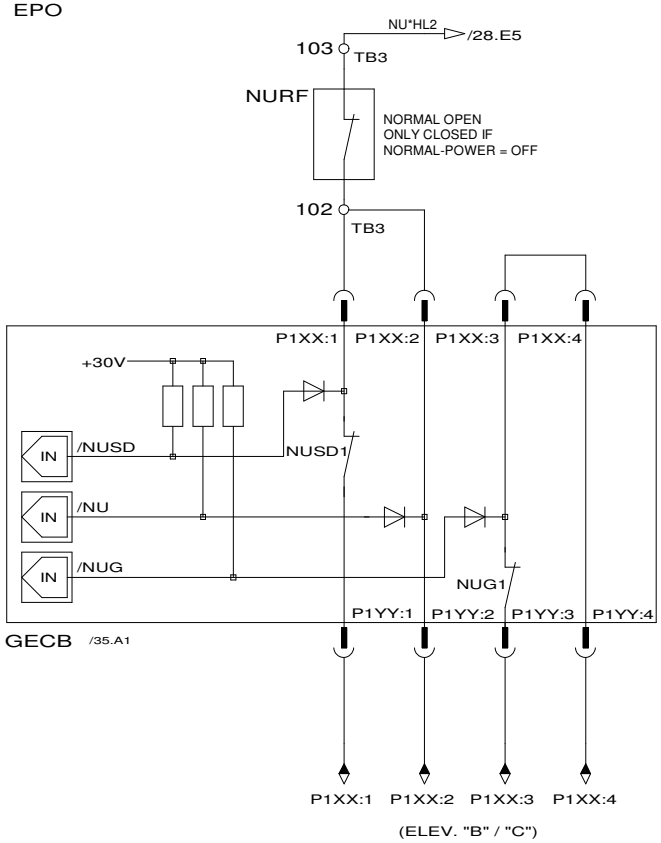

EPO

Esquema de Interligação
Interconnection Scheme

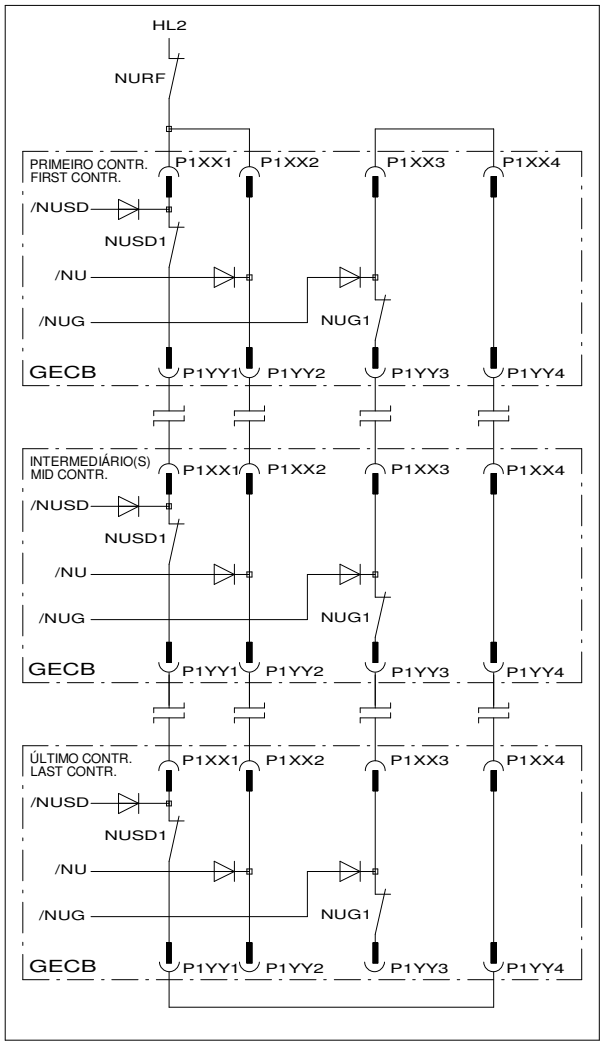

CHANGES

WARNING
THIS WORK AND THE INFORMATION IT CONTAINS ARE THE PROPERTY OF OTIS ELEVATOR COMPANY ("OTIS"). IT IS DELIVERED TO OTHERS ON THE EXPRESS CONDITION THAT IT WILL BE USED FOR, OR ON BEHALF OF, OTIS; THAT NEITHER IT NOR THE INFORMATION IT CONTAINS WILL BE REPRODUCED OR DISCLOSED, IN WHOLE OR IN PART, WITHOUT THE PRIOR WRITTEN CONCENT OF OTIS; AND THAT ON DEMAND IT AND ANY COPIES WILL BE PROMPTLY RETURNED TO OTIS.
UNPUBLISHED WORK © OTIS ELEVATOR COMPANY. ALL RIGHTS RESERVED

Otis
A United Technologies Company

Controller Wiring Diagram
Diagrama Elétrico do Controle
GeN2-Comfort / Regen-UD

DWG BAA21000H

OTIS ENGINEERING
SIT São Bernardo - BRAZIL

CUSTOMER:	DRAWN	Richard Horn	ORIGINAL DATE
	CHK	Richard Horn	29/02/2012
PROJECT:	APPD	Marcos Gomes	SHEETS
LOCATION:	AUTH	11/A-006	SHEET 30

DRAFTED IN ACCORDANCE WITH OTIS DOCUMENT 52847

Rev. 2011-03-24

PX1	
1	/15.E6
2	/15.E6
3	/16.D7
4	/16.D8
5	/8.D2
6	/8.D2
7	/8.D2
8	/8.D3
9	/7.C7
10	/7.C6
11	
12	

PX2	
1	-
2	
3	
4	
5	

PX3	
1	/11.B6
2	/28.D7
3	/11.B6
4	/11.B6
5	
6	/7.A2
7	/7.B2
8	

PX4	
1	
2	/7.B1
3	/7.C1

PX5	
1	/8.B5
2	/8.B6
3	/8.B6
4	/8.B6
5	/8.B6
6	/8.B7
7	/8.B7
8	/8.B7

PY1	
1	/4.A5
2	/4.A5
3	/28.D7
4	/4.A5
5	/4.B5

PY2	
1	/4.B5
2	/4.B5
3	/4.C5
4	/4.C5
5	/4.C5
6	/28.D7
7	/4.C7
8	

P3M	
1	/9.E3
2	/28.D2
3	/9.C6

P4M	
1	/9.B6
2	/9.C6
3	/9.C6
4	/11.E5
5	/11.E5
6	/11.C5
7	/11.C5
8	

P19M	
1	/7.C2
2	/7.D2
3	
4	/9.B2
5	/9.B2

P17C	
1	/8.A7
2	
3	/8.A7

P101C	
1	/15.B1
2	/15.B1
3	/15.B1
4	/15.B1
5	/15.D5
6	/15.D6
7	/15.D7
8	/15.D7
9	/8.E4
10	/8.E4
11	/16.D7
12	/16.D8

P102C	
1	/9.B1
2	/9.D3
3	/9.B6
4	/10.D6
5	/10.C7
6	/11.E2
7	
8	/11.E4
9	
10	/4.B7
11	/28.D8
12	/9.E3

P1H	
1	/22.A2
2	/22.A2
3	
4	/22.B2
5	/22.B2

P4T	
4T1	/9.D3
4T2	/9.D3
4T3	/9.D3

P20M	
1	/7.B2
2	/7.C2
3	

P10H	
1	/9.C6
2	/9.C5
3	/9.D5
4	/9.C5
5	/9.D5

P2H	
1	/10.C5
2	/9.D6
3	/10.B5
4	/10.A5
5	/9.D6

GECB TERMINALS

DCPB-TB1	
1	/3.A3
2	/3.A3
PE	/3.B3
4	/3.B3

DCPB-TB7	
1	/3.A4
2	/3.A4
PE	/3.B4
4	/3.B4

DCPB-P10	
1	/3.B3
2	/3.B3
3	/3.B3

DCPB-P11	
1	/3.C3
2	/3.C3
3	/3.C3

DCPB-P12	
1	/3.D3
2	/3.D3

DCPB-P15	
1	/5.C4
2	/5.C4

DCPB-P1	
1	/12.B2
2	/12.B2
3	/12.A2
4	/12.B4
5	/12.A2
6	/12.B2
7	/12.B4
8	/12.B4

DCPB-P2	
1	/8.E1
2	/8.E2
3	/8.E2
4	/8.E2

DCPB-P3	
1	/5.A4
2	/5.A4
3	/5.B4
4	/5.B4
5	/5.B4

DCPB-P16	
1	/3.D3
2	/3.D3

DCPB-P17	
1	/12.D3
2	/12.D3
3	/12.D4

DCPB-P18	
1	/5.C3
2	--

DCPB-P5	
1	/5.B3
2	/5.B3
3	/5.B3
4	/5.C3
5	/5.C3

DCPB-P6	
1	/5.C3
2	/5.C3

DCPB-P7	
1	/5.A3
2	/5.A3
3	/5.B3
4	/5.B3
5	/5.B3
6	/5.B3

DCPB-P8	
1	/5.C3
2	/5.C3
3	/5.D3

DCPB TERMINALS

SPBC-P1	
1	/6.B6
2	/6.B6
3	/6.B6
4	/6.B6

SPBC-P2	
1	/7.B5
2	/7.B6
3	/7.B6
4	/7.B6
5	/7.B7
6	/7.B7
7	/7.B7
8	/7.B8

SPBC-P7	
1	/5.B6
2	/5.A6
3	/5.A6
4	/5.B6
5	/5.B6

SPBC-P11	
1	/6.B6
2	/6.B6

SPBC-P12	
1	/6.A6
2	/6.A6
3	/6.A6

SPBC-P13	
1	/6.A5
2	/6.A5
3	/6.A5
4	/6.A5
5	/6.B5
6	/6.B5

SPBC-P14	
1	/6.B5
2	/6.B5
3	/6.B5
4	/6.B5
5	/6.C5
6	/6.C5
7	/6.C5
8	/6.C5
9	/6.C5
10	/6.C5

SPBC-P15	
1	/6.D3
2	/6.D4
3	/6.D4
4	/6.D5
5	/6.D5
6	/6.D6
7	/6.D7
8	/6.D7
9	/6.D8

SPBC TERMINALS

BCB-P1	
1	/6.B3
2	/6.B3
3	/6.B3
4	/6.B3
5	/6.C3

BCB-P2	
1	/6.A3
2	/6.A3
3	/6.B3

BCB-P3	
1	/6.A5
2	/6.A5
3	/6.A5
4	/6.A5
5	/6.B5
6	/6.B5

BCB-P4	
1	/6.B5
2	/6.B5
3	/6.B5
4	/6.B5
5	/6.C5
6	/6.C5
7	/6.C5
8	/6.C5
9	/6.C5
10	/6.C5

BCB-P5	
1	/6.C3
2	/6.C3
3	/6.C3

BCB-P6	
1	/4.D1
2	/4.D1
3	/4.E1
4	/4.E1
5	/4.E1

BCB TERMINALS

CHANGES

WARNING

THIS WORK AND THE INFORMATION IT CONTAINS ARE THE PROPERTY OF OTIS ELEVATOR COMPANY ("OTIS"). IT IS DELIVERED TO OTHERS ON THE EXPRESS CONDITION THAT IT WILL BE USED FOR, OR ON BEHALF OF, OTIS; THAT NEITHER IT NOR THE INFORMATION IT CONTAINS WILL BE REPRODUCED OR DISCLOSED, IN WHOLE OR IN PART, WITHOUT THE PRIOR WRITTEN CONCENT OF OTIS; AND THAT ON DEMAND IT AND ANY COPIES WILL BE PROMPTLY RETURNED TO OTIS.

UNPUBLISHED WORK © OTIS ELEVATOR COMPANY. ALL RIGHTS RESERVED

Otis
A United Technologies Company

Controller Wiring Diagram
Diagrama Elétrico do Controle

GeN2-Comfort / Regen-UD

DWG BAA21000H

OTIS ENGINEERING
SIT São Bernardo - BRAZIL

CUSTOMER:	DRAWN	Richard Horn	ORIGINAL DATE
	CHK	Richard Horn	29/02/2012
PROJECT:	APPD	Marcos Gomes	SHEETS
LOCATION:	AUTH	11/A-006	SHEET 31

DRAFTED IN ACCORDANCE WITH OTIS DOCUMENT 52847

Rev. 2011-03-24

Devices list

1FAN	CTR	/3.E3	Fan	Ventilador do Drive
1LV	CAR	/15.B5	1st. Door zone level	Sensor de Zona de Porta (1°.)
1PES	HTW	/9.D7	1st. Pit emergency stop switch	Chave de Emergência do Poço (1°.)
1 / 2LS	CAR	/15.B7	1st. / 2nd. Limit switch	1°. / 2°. Chave Limite
2PES	HTW	/9.D7	2nd. Pit emergency stop switch	Chave de Emergência do Poço (2°.)
6LS	CAR	--	Up direction limit switch	Chave Limite de Subida (INS)
ALB	CAR	/27.C6	Alarm button	Botão de Alarme
APD	DRV	/3.A3	Radio interference filter	Filtro "Anti Poluição"
ARPB	HTW	/4.D3	Automatic Rescue Power Board	Placa do Resgate Automático
AT120	CAR	/34.A7	Door operator AT120	Operador de Portas AT120
ATK	CAR	/21.D5	Attendant Key Switch	Chave Serviço de Ascensorista
B	HTW	/5.E2	Brake	Freio da Máquina
BAT	CAR	/27.C6	Battery	Bateria
BAT1..4	CTR	/6.B1	Battery 1 ... 4	Baterias de Resgate
BCB	CTR	/34.A1	Battery Control Board	Battery Control Board
BFS_	HTW	/9.E5	Oil buffer switch	Chave do pára-choque (PISTÃO)
BRB2	CTR	/6.B7	Brake Release Button	Chave de Acionamento do Freio
BTS	HTW	/9.D8	Broken tape switch	Contato de Fita Quebrada (PRS2)
BUZ	CAR	/19.C2	Buzzer	Buzzer
C (PS)	BOX	/22.C3	Condenser	Capacitor da Fonte Externa
CB_	CAR	/19.C2	Car button	Botão de Chamada (carro)
CBT	CAR	/21.C4	Car Button Tone	Sinal de Botão de Chamada (Buz)
CDI	CAR	/18.C2	Car Direction Indicator	Indicador Direção do Carro (Scroll)
CDL	CAR	/21.D1	Car Direction Lantern	Indicador Direção do Carro
CLS	CAR	/27.C3	Car Light Switch	Chave da Luz no Carro
CPI	CAR	/20.B8	Car position indicator	Indicador de Posição do Carro
CSA_	CAR	/21.D3	Car Secure Access _	Chaves do Access Code
DBS	CTR	/9.C6	Electrical recall switch	Chave ERO
DCB	CAR	/20.D5	Door close button	Botão de Fechar Porta
DCPB	DRV	/34.A3	Drive Control & Power Board	Placa de Controle e Pot. do Drive
DDB	CTR	/11.D5	Down Direction Button	Botão de Direção Descida - INS
DIS	CAR	/16.A7	Down Impulse Switch	Sensor Renivel. Descida
DHBn	HTW	/23.C4	Down hall button	Botão de Chamada - Descida (hall)
DOB	CAR	/19.C1	Door open button	Botão de Abrir Porta
DO5-EM	CAR	/34.C7	Door operator DCSS5-EM (3wire)	Operador de Portas DO2000 (3-fios)
DS_	HTW	/10.A3	Door contact	Contato de Porta (andar)
DTG-2	HTW	/5.D7	Digital encoder	Encoder Digital

ECL	CAR	/27.B6	Emergency car light	Luz de Emergência do Carro
EEC	N/A	N/A	Top of car emergency exit	Contato da Saída de Emergência
EFK	HTW	/7.C7	Emergency Fireman Keyswitch	Chave Emergência de Bombeiro
EFS	CTR	/20.D6	Emergency Fire Switch	Chave Serviço de Bombeiro - carro
ERO	CTR	/11.C4	Emergency rescue operation	Op. de Resgate de Emergência
ESB	CTR	/26.A2	Emergency Stop Button	Botão de Parada de Emergência
F	CAR	/27.D2	Fan	Ventilador da Cabina
F1L	CTR	/6.A7	Fuse	Fusível
F2L	CTR	/13.A2	Fuse	Fusível Operador Frontal
F3L	CTR	/14.A2	Fuse	Fusível Operador Oposto
--	--	-	Fuse	Fusível
--	--	-	Fuse	Fusível
FSK1	CTR	/26.A2	Fuse	Disjuntor Geral da Iluminação
FSK2	CTR	/26.C5	Fuse	Disjuntor da Iluminação do Poço
FSK3	CTR	/26.C2	Fuse	Disjuntor da Iluminação do Carro
FSL	CAR	/25.C2	Fireman service light	Luz de Serviço de Bombeiro
FSS	CAR	/25.C1	Fireman service switch	Chave de Serviço de Bombeiro
GECB	CTR	/35.a1	Global Elevator Control Board	Global Elevator Control Board
GS	CAR	/10.D6	Gate switch	Contato de Porta (cabina)
GTC	HTW	/9.D7	Governor tension contact	Contato do Tensor do Limitador
HB_	HTW	/23.C2	Hall button	Botão de Chamada (hall)
HDDL	HTW	/26.D7	Hall Down Direction Light	Indicador de Direção do Hall (Desc.)
HLIB	HTW	/26.D4	Hoistwaylight button in hoistway	Interuptor da Luz - Passadiço
HPI	HTW	/23.B7	Hall position indicator	Indicador de Posição do Hall
HUDL	HTW	/22.D6	Hall Up Direction Lantern	Indicador de Direção do Hall
ILCA	HTW	/26.C4	Hoistway light	Iluminação do Passadiço
IRC-2D	CAR	/17.C4	Infrared curtain - 2D	Lambda 2D
ISS	CAR	/20.D5	Independent service switch	Chave de Serviço Independente
J*BOX	CAR	/15.A2	Junction box	Caixa de Conexão
LARG	HTW	/3.B8	Light (only for Argentina)	Iluminação (Agentina)
LIHS	CTR	/26.D4	Switch for hoistway light	Interuptor da Luz - Poço
LIHn	HTW	/26.D7	Hoistway light	Luz do Passadiço
LR	CTR	/21.D5	Fan/Light relay	Rele do Ventilador / Luz
LRD	CAR	/17.C3	Light ray device	Foto-Célula
LT*C	CAR	/21.B7	Line Terminator	Terminal de Linha (carro)
LT*H	HTW	/25.A7	Line Terminator	Terminal de Linha (hall)
LWB	HTW	/8.D6	Load weighing board	Célula de Carga

CHANGES

WARNING
THIS WORK AND THE INFORMATION IT CONTAINS ARE THE PROPERTY OF OTIS ELEVATOR COMPANY ("OTIS"). IT IS DELIVERED TO OTHERS ON THE EXPRESS CONDITION THAT IT WILL BE USED FOR, OR ON BEHALF OF, OTIS; THAT NEITHER IT NOR THE INFORMATION IT CONTAINS WILL BE REPRODUCED OR DISCLOSED, IN WHOLE OR IN PART, WITHOUT THE PRIOR WRITTEN CONCENT OF OTIS; AND THAT ON DEMAND IT AND ANY COPIES WILL BE PROMPTLY RETURNED TO OTIS.

UNPUBLISHED WORK © OTIS ELEVATOR COMPANY. ALL RIGHTS RESERVED

Otis
A United Technologies Company

Controller Wiring Diagram
Diagrama Elétrico do Controle

GeN2-Comfort / Regen-UD

DWG BAA21000H

OTIS ENGINEERING
SIT São Bernardo - BRAZIL

CUSTOMER:	DRAWN	Richard Horn	ORIGINAL DATE
	CHK	Richard Horn	29/02/2012
PROJECT:	APPD	Marcos Gomes	SHEETS
LOCATION:	AUTH	11/A-006	SHEET 32

DRAFTED IN ACCORDANCE WITH OTIS DOCUMENT 52847

Rev. 2011-03-24

Devices list

MBB		/3.A5	Machine brake box	Caixa de Frenagem da Máquina
MBR	HTW	/3.D6	Motor brake resistors	Resistor de Frenagem do Motor
MO	HTW	/3.B8	Motor	Motor
NOR	HTW	/12.D7	Voltage relay	Rele de Operação Normal
OCB	CTR	/2.A2	Overload circuit breaker	Disjuntor Principal
OLD	CAR	/20.D6	Overload Light	Luz de Sobrecarga
OS	HTW	/9.B6	Over speed switch	Contato de Sobre Velocidade
OVFR	DRV	/3.A2	Otis Variable Frequency Regen	Otis variable frequency drive Regen
PCS	CAR	/27.C4	Outlet socket on car	Tomada no Topo do Carro
PHS	HTW	/26.D7	Outlet socket in hoistway	Tomada no Poço
PKS	CAR	/25.C3	Parking Switch	Chave de Estacionamento (Lobby)
PMS	CTR	/26.A7	Outlet socket in machineroom	Tomada
PRS	CAR	/15.B5	Position reference system	Sist. de Referência de Posição
R-ENC	HTW	/5.C7	Rescue encoder	Encoder de Resgate
RAT120	CAR	/34.A7	Rear door operator AT120	Operador de Portas AT120 - oposta
RBI	HTW	/7.E3	Resistance Based Inspection	Inspeção Baseada em Resistência
RDS1	HTW	/10.C3	Rear door contact	Contato de Porta Oposta (andar)
RDSn	HTW	/10.C3	Rear door contact	Contato de Porta Oposta (andar)
RF	BOX	/22.C3	Rectifier	Retificador (Fonte Externa)
RGS	CAR	/10.D7	Rear gate switch	Contato de Porta Oposta (cabina)
RLRD	CAR	/18.C4	Rear light ray device	Foto-Célula (porta oposta)
RPS	CTR	/6.B2	Rescue power switch	Interruptor do Circuito de Resgate
RR1	CTR	/6.D4	Rescue Relay	Rele de Resgate
RR2	CTR	/6.D5	Rescue Relay	Rele de Resgate
RRD	HTW	/9.B6	Remote Resetting Device	Dispositivo de Reajuste Remoto
RS*JBX	CAR	/17.B7	Remote Station	Estação Remota (Caixa de Conexão)
RS*JBX	CAR	/18.B3	Remote Station	Estação Remota (Caixa de Conexão)
RS*CAR	CAR	/19.B3	Remote Station	Estação Remota (POC)
RS*CAR	CAR	/20.B3	Remote Station	Estação Remota (POC)
RS*HTW	HTW	/23.B3	Remote Station	Estação Remota (HALL)
RS*HTW	HTW	/24.B1	Remote Station	Estação Remota (HALL)
RS*HTW	HTW	/25.B2	Remote Station	Estação Remota (HALL)
RS*HTW	HTW	/25.B6	Remote Station	Estação Remota (HALL)
RTD	HTW	/9.B6	Remote Trigger Device	Dispositivo de Disparo Remoto
RTES	CAR	/9.E1	Rear top of car emerg. stop switch	Botão de Emergência no Topo (op.)
SHL	HTW	/24.C1	Signal Hall Lantern	Lanterna com gongo
SK1	HTW	/12.D6	Contactor to shortcut motor phases	Rele de Curtoc. Fases do Motor

SOS	CAR	/9.B3	Safety operated switch	Contato do Freio de Segurança
SPBC_III	CTR	/36.A1	Service Panel Board	Service Panel Board with CAN
SVT	CTR	/8.B4	Service Tool	Ferreamenta de Serviço " URM "
SW	DRV	/12.E3	Main contactor	Contator Principal
UHBn	HTW	/23.C5	Up hall button	Botão de Subida Hall
T1	DRV	/3.C2	Line Reactor	Reator de Linha
TALB	CTR	/27.C6	Top of car alarm button	Botão de Alarme (Topo Carro)
TB1	CTR	/2.D5	Terminal Block	Bloco Terminal - Alimentação Drive
TB3	CTR	/2.B4	Terminal Block	Régua de Borne - Controle
TCBC	CTR	--	Traction Control Board	Placa de Controle de Tração (CAN)
TCI	CAR	/9.A6	Top of car inspection switch	Chave de Inspeção (Topo Carro)
TCIB	CAR	/11.B3	Top of car inspection control button	Chave de Inspeção (Botão Comum)
TES	CAR	/9.A2	Top of car emergency stop switch	Botão de Emergência no Topo
TH1	CTR	/6.B2	Thermistor	Termistor
THB	HTW	/5.B1	Thermal switch	Termo Contato do Motor
THB	CTR	/7.B1	Thermal switch	Termo Contato do Controle
THT	CTR	/7.B1	Thermal switch	Termo Contato do Transformador
TIB	CAR	/11.B3	Inspection direction buttons	Botões de Direção em Inspeção
TRL	HTW	/2.C2	Line Transformer	Transformador de Linha
TRF	BOX	/22.D2	Transformer	Transformador
TRF1	CTR	/4.A3	Transformer	Transformador de Comando
TRF2	HTW	/4.E5	ARO - Transformer	Transformador do ARO
UD	DRV	/3.A2	Ultra Drive - OVF Regen Drive	Ultra Drive - OVF Regen Drive
UDB	CTR	/11.D5	Up Direction Button	Botão de Direção Subida - INS
UDLS	CAR	/9.C3	Up/down final limit switch	Limite Final
UDS	CTR	/11.D5	Up and down direction switch	Limite de Subida (Inspeção)
UHB_	HTW	/23.C5	Up hall button	Botão de Subida Hall
UIS	CAR	/16.A6	Up Impulse Switch	Sensor Renivel. Subida
--	--	--	--	--
--	--	--	--	--
--	--	--	--	--
--	--	--	--	--
--	--	--	--	--
--	--	--	--	--
--	--	--	--	--
--	--	--	--	--
--	--	--	--	--

CHANGES

WARNING
THIS WORK AND THE INFORMATION IT CONTAINS ARE THE PROPERTY OF OTIS ELEVATOR COMPANY ("OTIS"). IT IS DELIVERED TO OTHERS ON THE EXPRESS CONDITION THAT IT WILL BE USED FOR, OR ON BEHALF OF, OTIS; THAT NEITHER IT NOR THE INFORMATION IT CONTAINS WILL BE REPRODUCED OR DISCLOSED, IN WHOLE OR IN PART, WITHOUT THE PRIOR WRITTEN CONCENT OF OTIS; AND THAT ON DEMAND IT AND ANY COPIES WILL BE PROMPTLY RETURNED TO OTIS.

UNPUBLISHED WORK © OTIS ELEVATOR COMPANY. ALL RIGHTS RESERVED

Otis
A United Technologies Company

Controller Wiring Diagram
Diagrama Elétrico do Controle

GeN2-Comfort / Regen-UD

DWG BAA21000H

OTIS ENGINEERING
SIT São Bernardo - BRAZIL

CUSTOMER:	DRAWN	Richard Horn	ORIGINAL DATE
	CHK	Richard Horn	29/02/2012
PROJECT:	APPD	Marcos Gomes	SHEETS
LOCATION:	AUTH	11/A-006	SHEET 33

DRAFTED IN ACCORDANCE WITH OTIS DOCUMENT 52847

Rev. 2011-03-24

PC-BOARD : **BCB**

PINNAME	SIGNAL MARKING	LOC.
P3:1	RESC_110V	
P3:2	BAT+	
P3:3	BAT+	
P3:4	HL1	
P3:5	EN_CONV	
P3:6	ARO	
P4:1	L1_L2_FAIL	
P4:2	L3_FAIL	
P4:3	UPS_24V	
P4:4	HL2	
P4:5	BAT_CHARGE	
P4:6	BAT_MAINT	/6.C3
P4:7	BAT_FAULT	
P4:8	BAT_REPLACE	
P4:9	FULL_CHARG	
P4:10	RESCUE_24V	
P2:1	AC_IN1	
P2:2	AC_IN2	
P2:3	HL1	
P1:1	BAT+	
P1:2	BAT-	
P1:3	BAT-	
P1:4	NTC	
P1:5	HL1	
P5:1	L3	
P5:2	NC	
P5:3	N	
P6:1	BAT+	
P6:2	BAT+	/4.E1
P6:3	BAT-	
P6:4	BAT-	
P6:5	ARO_CONV	

PC-BOARD : **ARPB**

PINNAME	SIGNAL MARKING	LOC.
P1:1	BAT+	
P1:2	BAT+	
P1:3	BAT-	
P1:4	BAT-	
P1:5	ARO_CONV_ON	
P2:1	BAT_V	/4.E3
P2:2	BAT_V	
P2:3	BAT+	
P2:4	BAT+	
P2:5	BAT_V	
P2:6	BAT_V	
P4:1	BAT_LEVEL_PG	
P4:2	PGDAT	
P4:3	VPP_N_MCLR	
P4:4	BAT-	
P4:5	VCC	
PE	AC_IN1	
PE_1	AC_IN2	

PC-BOARD : **DCPB**

PINNAME		SIGNAL MARKING	LOC.
TB1	1	L1	
	2	L2	
	3	PE1	
	4	L3	
TB3	1	DC_BUS-	
TB4	1	DC_BUS+	
TB7	1	INV_U	
	2	INV_V	
	3	PE2	
	4	INV_W	/3.A3
P10	1	CNV_R1	
	2	CNV_S1	
	3	CNV_T1	
P11	1	CNV_R2	
	2	CNV_S2	
	3	CNV_T2	
P12	1	FAN	
	2	DGND	
P16	1	LR_THERM_A	
	2	LR_THERM_B	
P9	1	ENC_A+	
	2	ENC_A-	
	3	ENC_B+	
	4	ENC_B-	
	5	ENC_5V	/5.A3
	6	ENC_RTN	
	7	n.c.	
	8	Shield (VIA5)	
P2	1	CAN_24V	
	2	CAN_H	/8.E1
	3	CAN_L	
	4	CAN_RTN	

PC-BOARD : **DCPB**

PINNAME		SIGNAL MARKING	LOC.
P1	1	MRO_SC_IN	
	2	n.c.	
	3	UIB	
	4	n.c.	/12.A3
	5	DIB	
	6	n.c.	
	7	SFC_RTN	
	8	SFC_RTN	
P3	1	UIS	
	2	DIS	
	3	1LV	
	4	2LV	
	5	PRS_RTN	
P5	1	LOGIC_BRK_PWR	
	2	LOGIC_BRK_PWR_RTN	
	3	BRK_GND	
	4	MRC_BRK_DRV	
	5	MRC_LOGIC_PWR	
P6	1	BRK_DC+	/5.A3
	2	BRK_GND	
P8	1	BRK_DC+	
	2	PE3	
	3	BRK_GND	
P7	1	24V_I/O	
	2	BS1	
	3	BS2	
	4	DGND	
	5	MOT_THERM	
	6	24V_I/O	
P15	1	BR_NC	/5.C4
	2	CRV_DBD	
P17	1	BR_NC	
	2	CRV_DBD	/12.A3
	3	SFC_2BR_RTN	
P18	1	BY	/5.A3
	2	BRK_DC+	
PE	---	VIA2	/28.D3

PC-BOARD : **DCPB**

PINNAME		SIGNAL MARKING	LOC.
P4	1	3.3V	
	2	OMU_CS*	
	3	DIB_CS*	
	4	SPI1_MISO	
	5	SPI1_SCLK	
	6	R310 (3.3V)	
	7	SPI1_MOSI	
	8	DGND	
	9	n.c.	
	10	n.c.	
P14	1	3.3V	
	2	UPROC_TRST	
	3	UPROC_TDI	
	4	UPROC_TMS	
	5	n.c.	
	6	DGND	
	7	UPROC_TCK	
	8	UPROC_TDO	
	9	POR*	
	10	DGND	
P19	1-20	JTAG Port	

PC-BOARD : **AT120**

PINNAME		MARKING	
L		L1	
PE		PE	
N		N	
ST306	1	Motor Supply	/13.B4
	2		
	3	Incre. Encoder	
	4		
	5		
	6		
P5	1	+24V	/13.A5
	2	DOS	/13.A5
	3	DOL	/13.A5
	4	/ST1	/13.A5
	5	/ST2	/13.A5
	6	/ST3	/13.A6
	7	/REV	/13.A6
	8	/DOB	/13.A6

PC-BOARD : **RAT120**

PINNAME		SIGNAL MARKING	LOC.
L		L1	
PE		PE	
N		N	
ST306	1	Motor Supply	/14.B4
	2		
	3	Incre. Encoder	
	4		
	5		
	6		
P5	1	+24V	/14.A5
	2	DOS	/14.A5
	3	DOL	/14.A5
	4	/ST1	/14.A5
	5	/ST2	/14.A5
	6	/ST3	/14.A6
	7	/REV	/14.A6
	8	/DOB	/14.A6

PC-BOARD : **DCSS5-E**

PINNAME		SIGNAL MARKING	LOC.
P1	1	L1	/13.D4
	2	PE	
	3	N	
P8	1	Motor Supply	/13.D4
	2		
	3		
	4		
	5		
P10		Encoder	/13.E4
P5	1	DOS	/13.D5
	2	DOL	
P4	1	/ST1	/13.D5
	2	/ST2	
	3	/ST3	
P2	1	+24V	/13.E5
	3	/DOB	
	4	/REV	

PC-BOARD : **RDCSS5-E**

PINNAME		SIGNAL MARKING	LOC.
P1	1	L1	/14.D4
	2	PE	
	3	N	
P8	1	Motor Supply	/14.D4
	2		
	3		
	4		
	5		
P10		Encoder	/14.E4
P5	1	DOS	/14.D5
	2	DOL	
P4	1	/ST1	/14.D5
	2	/ST2	
	3	/ST3	
P2	1	+24V	/14.E5
	3	/DOB	
	4	/REV	

CHANGES

WARNING

THIS WORK AND THE INFORMATION IT CONTAINS ARE THE PROPERTY OF OTIS ELEVATOR COMPANY ("OTIS"). IT IS DELIVERED TO OTHERS ON THE EXPRESS CONDITION THAT IT WILL BE USED FOR, OR ON BEHALF OF, OTIS; THAT NEITHER IT NOR THE INFORMATION IT CONTAINS WILL BE REPRODUCED OR DISCLOSED, IN WHOLE OR IN PART, WITHOUT THE PRIOR WRITTEN CONCENT OF OTIS; AND THAT ON DEMAND IT AND ANY COPIES WILL BE PROMPTLY RETURNED TO OTIS.

UNPUBLISHED WORK © OTIS ELEVATOR COMPANY. ALL RIGHTS RESERVED

Otis
A United Technologies Company

Controller Wiring Diagram
Diagrama Elétrico do Controle

GeN2-Comfort / Regen-UD

DWG BAA21000H

OTIS ENGINEERING
SIT São Bernardo - BRAZIL

CUSTOMER:	DRAWN	Richard Horn	ORIGINAL DATE 29/02/2012
	CHK	Richard Horn	
PROJECT:	APPD	Marcos Gomes	SHEETS
LOCATION:	AUTH	11/A-006	SHEET 34

DRAFTED IN ACCORDANCE WITH OTIS DOCUMENT 52847

Rev. 2011-03-24

PC-BOARD : GECB

PINNAME	SINAL / MARKING	LOC.
PY1:1	23	
PY1:2	0S1	
PY1:4	23V	
PY1:5	0S2	
PY2:1	AA0	
PY2:2	AB1	/4.A5
PY2:3	AC2	
PY2:4	20V	
PY2:5	OS4	
PY2:7	B+	
P1M:1	B+	
P1M:3	HL2	
P22M:1	NC	
PY1:3	HL2	
PY2:6	HL1	
P102C:11	HL1	/28.D7
PX3:2	HL1	
P22M:4	HL1	
P22M:6	HL1	
PY2:8	NC	
PX1:1	1LV	
PX1:2	2LV	
P101C:5	1LV	/15.E5 /16.E3
P101C:6	2LV	
PX1:3	UIS	/16.D7
P101C:11	UIS	
PX1:4	DIS	/16.D8
P101C:12	DIS	
PX1:5	CAN_H	
PX1:6	CAN_L	/8.D2
PX1:7	HL2	
PX1:8	SPB+	/8.D3
PX1:9	/EFO	/7.C7
PX1:10	30V_Out	/7.C6
PX1:11	BY_CHK	
PX1:12	BR_CHK	
PX2:1	/LR	-
PX2:2	/DFCR	
PX2:3	SP_OUT_A	
PX2:4	/SOR	
PX2:5	NC	
PX3:1	AB2	
PX3:4	DIB	
PX3:3	UIB	/11.C4
P4M:6	UIB	
P4M:7	DIB	
PX3:5	AB1	

PINNAME	SINAL / MARKING	LOC.
PX4:2	AC2	
PX4:3	/1TH	
PX3:6	AB1	
PX3:7	AC4	/7.E2
P20M:1	AC4	
P20M:2	AC5	
P19M:1	AC5	
P19M:2	/2TH	
PX5:1	Brake+	
PX5:2	HL2	
PX5:3	SPB+_F	
PX5:4	CAN_H	/8.A5
PX5:5	CAN_L	
PX5:6	12V_BB	
PX5:7	DZI+	
PX5:8	REB	
P17C:1	DZI+	
P17C:3	12V_BB	
P10H:1	HL2	
P10H:2	1RTD	
P10H:3	HL2	
P10H:4	1RRD	
P10H:5	3RTD	/9.D6
P2H:2	AA8	
P2H:5	AA9	
P3M:3	AA8	
P4M:2	AA9	
P4M:3	/ERO	
P102C:6	AA15	
P102C:8	AA14	/11.E2
P4M:4	AA14	
P4M:5	AA15	
P4M:8	NC	
P19M:3	NC	
P19M:4	AA100	
P19M:5	AA1	/9.A2
P102C:1	AA100	
P20M:3	NC	
P22M:2	HL2	
P2H:1	AA12	
P2H:3	/DW	
P2H:4	/ES	
P6T:1	/ES	
P6T:2	/DW	/10.A5
P6T:3	AA12	
P22M:3	AA13	
P22M:5	/ES	
P102C:4	AA12	
P102C:5	DFC	

PINNAME	SINAL / MARKING	LOC.
P22M:7	30V	
P22M:8	HL2	
P17C:2	NC	
P101C:1	DL1	
P101C:2	DL2	/15.B1
P101C:3	RTN	
P101C:4	30VDC	
P101C:7	/1LS	/15.E5
P101C:8	/2LS	/15.E5
P101C:9	C_CAN_H	/8.E4
P101C:10	C_CAN_L	/8.E4
P5T:1	AA5	/9.D3
P102C:2	AA5	
P4M:1	AA10	/9.B6
P102C:3	AA10	
P102C:7	NC	
P102C:9	NC	
P102C:10	AB1	/4.B7
P3M:1	AA6	
P5T:2	AA6	/9.E3
P102C:12	AA6	
P1H:1	DL1	
P1H:2	DL2	/22.A1
P1H:4	RTN	
P1H:5	30VDC	
P1H:3	NC	
P5T:3	NC	/9.D4
P100:1	TXA	
P100:2	TXB	
P100:3	RXA	
P100:4	RXB	
P1XX:1	/NUSD	
P1XX:2	/NU	
P1XX:3	/NUG	
P1XX:4		
P1YY:1	/NUSD	
P1YY:2	/NU	
P1YY:3	/NUG	
P1YY:4		

PINNAME	SINAL / MARKING	LOC.
P3:1	VCC	
P3:2	VCC	
P3:3	SVTTXB	
P3:4	SVTRXA	
P3:5	P3:5	
P3:6	VCC	
P3:7	SVTTXA	
P3:8	SVTRXB	
P3:9	GND	
PX4:1	NC	
PX3:8	NC	
P1M:2	PE	
P3M:2	PE	/28.D2
PE	PE	/28.D2

Partes na
Parts on

GECB

Switch SW4

ON

OFF OFF position works as STUB node

CAN BUS Termination

Status indicator

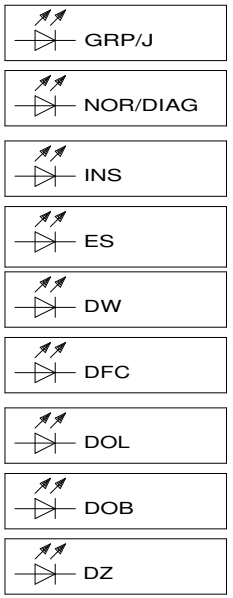

CHANGES

WARNING

THIS WORK AND THE INFORMATION IT CONTAINS ARE THE PROPERTY OF OTIS ELEVATOR COMPANY ("OTIS"). IT IS DELIVERED TO OTHERS ON THE EXPRESS CONDITION THAT IT WILL BE USED FOR, OR ON BEHALF OF, OTIS; THAT NEITHER IT NOR THE INFORMATION IT CONTAINS WILL BE REPRODUCED OR DISCLOSED, IN WHOLE OR IN PART, WITHOUT THE PRIOR WRITTEN CONCENT OF OTIS; AND THAT ON DEMAND IT AND ANY COPIES WILL BE PROMPTLY RETURNED TO OTIS.

UNPUBLISHED WORK © OTIS ELEVATOR COMPANY. ALL RIGHTS RESERVED

Otis
A United Technologies Company

Controller Wiring Diagram
Diagrama Elétrico do Controle

GeN2-Comfort / Regen-UD

DWG BAA21000H

OTIS ENGINEERING
SIT São Bernardo - BRAZIL

CUSTOMER:	DRAWN	Richard Horn	ORIGINAL DATE
	CHK	Richard Horn	29/02/2012
PROJECT:	APPD	Marcos Gomes	SHEETS
LOCATION:	AUTH	11/A-006	SHEET 35

DRAFTED IN ACCORDANCE WITH OTIS DOCUMENT 52847

Rev. 2011-03-24

PC-BOARD : SPBC_III

PINNAME	SINAL / MARKING	LOC.	PINNAME	SINAL / MARKING	LOC.
P2:1	NC		P7:1	12V	
P2:2	HL2		P7:2	GND	
P2:3	SPB+		P7:3	SHIELD	/5.A6
P2:4	CAN_H		P7:4	SIG_A	
P2:5	CAN_L	/8.B5	P7:5	SIG_B	
P2:6	UPS_12V		P8:1	SVT_VCC	
P2:7	DZI+		P8:2	SVT_VCC	
P2:8	REB		P8:3	TXB	
P3:1	UPS_12V		P8:4	RXA	
P3:2	HL2		P8:5	GND	/8.A4
P1:1	BRB2_OUT		P8:6	SVT_VCC	
P1:2	BAT+		P8:7	TXA	
P1:3	UPS_24V		P8:8	RXB	
P1:4	BRB2_ST		P8:9	GND	
P11:1	BAT_VF		P9	PE	
P11:2	BAT_SPB		P10:1	LED In +	
P12:1	DRIVE_110V		P10:2	LED In -	
P12:2	NC		P10:3	SV Button +	
P12:3	BAT+		P10:4	SV Button -	
P13:1	RESC_110V		P10:5	NC	
P13:2	BAT+		P15:1	EAR3	
P13:3	BAT+	/6.C6	P15:2	ARO_ST	
P13:4	HL1		P15:3	RR1_OUT	
P13:5	EN_CONV		P15:4	RR2_OUT	/6.D8
P13:6	ARO		P15:5	RR_ST	
P14:1	L1_L2_FAIL		P15:6	CDC_ST	
P14:2	L3_FAIL		P15:7	OCB_ST	
P14:3	UPS_24V		P15:8	UPS_24V	
P14:4	HL2		P15:9	HL2	
P14:5	BAT_CHARGE				
P14:6	BAT_MAINT				
P14:7	BAT_FAULT				
P14:8	BAT_REPLACE				
P14:9	FULL_CHARG				
P14:10	RESCUE_24V				
A	PTT:A				
B	PTT:B				
P6:1	NC				
P6:2	NC				
P6:3	PTT:A				
P6:4	PTT:B				
P6:5	NC				
P6:6	NC				

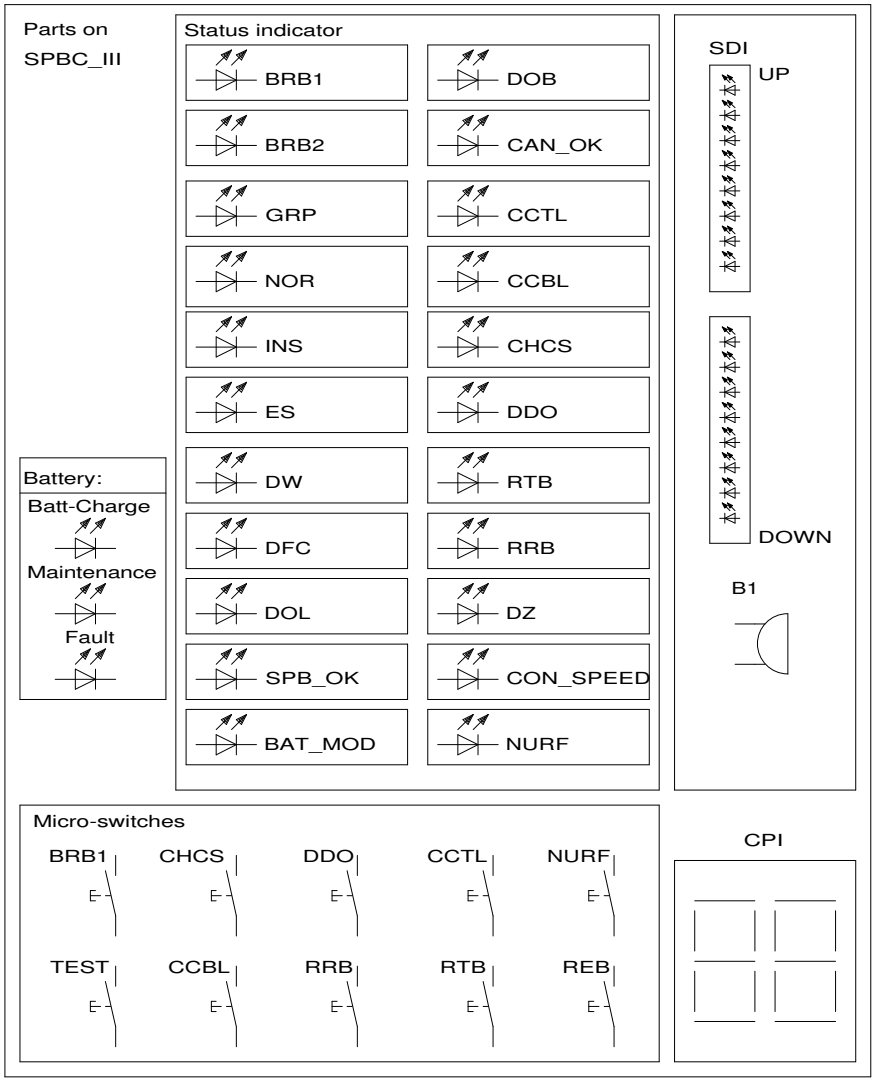

CHANGES

WARNING

THIS WORK AND THE INFORMATION IT CONTAINS ARE THE PROPERTY OF OTIS ELEVATOR COMPANY ("OTIS"). IT IS DELIVERED TO OTHERS ON THE EXPRESS CONDITION THAT IT WILL BE USED FOR, OR ON BEHALF OF, OTIS; THAT NEITHER IT NOR THE INFORMATION IT CONTAINS WILL BE REPRODUCED OR DISCLOSED, IN WHOLE OR IN PART, WITHOUT THE PRIOR WRITTEN CONCENT OF OTIS; AND THAT ON DEMAND IT AND ANY COPIES WILL BE PROMPTLY RETURNED TO OTIS.

UNPUBLISHED WORK © OTIS ELEVATOR COMPANY. ALL RIGHTS RESERVED

Otis
A United Technologies Company

Controller Wiring Diagram
Diagrama Elétrico do Controle

GeN2-Comfort / Regen-UD

DWG BAA21000H

OTIS ENGINEERING
SIT São Bernardo - BRAZIL

CUSTOMER:	DRAWN	Richard Horn	ORIGINAL DATE
	CHK	Richard Horn	29/02/2012
PROJECT:	APPD	Marcos Gomes	SHEETS
LOCATION:	AUTH	11/A-006	SHEET 36

DRAFTED IN ACCORDANCE WITH OTIS DOCUMENT 52847

Rev. 2011-03-24

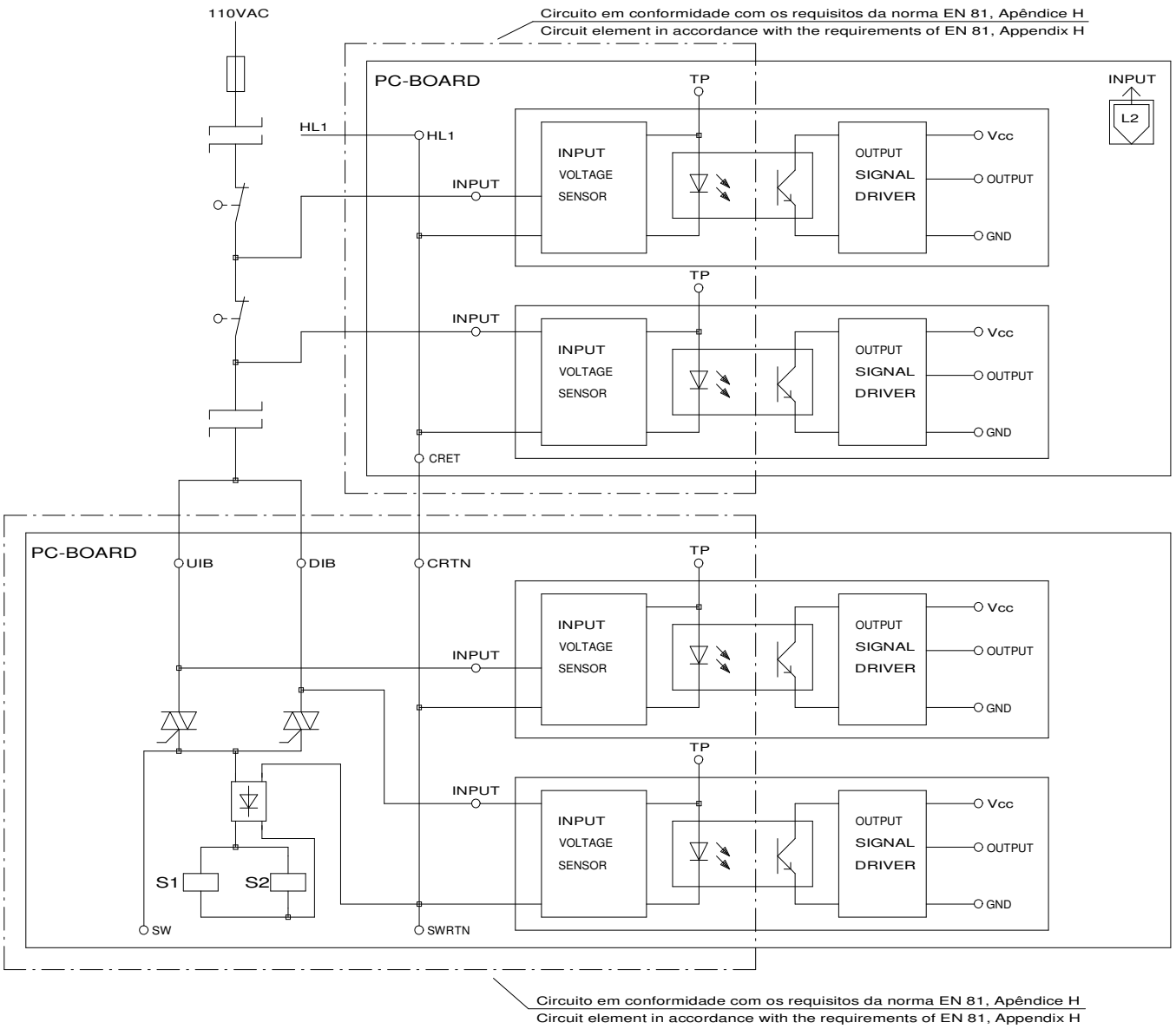

CHANGES

WARNING

THIS WORK AND THE INFORMATION IT CONTAINS ARE THE PROPERTY OF OTIS ELEVATOR COMPANY ("OTIS"). IT IS DELIVERED TO OTHERS ON THE EXPRESS CONDITION THAT IT WILL BE USED FOR, OR ON BEHALF OF, OTIS; THAT NEITHER IT NOR THE INFORMATION IT CONTAINS WILL BE REPRODUCED OR DISCLOSED, IN WHOLE OR IN PART, WITHOUT THE PRIOR WRITTEN CONCENT OF OTIS; AND THAT ON DEMAND IT AND ANY COPIES WILL BE PROMPTLY RETURNED TO OTIS.

UNPUBLISHED WORK © OTIS ELEVATOR COMPANY. ALL RIGHTS RESERVED

Otis
A United Technologies Company

Controller Wiring Diagram
Diagrama Elétrico do Controle

GeN2-Comfort / Regen-UD

DWG BAA21000H

OTIS ENGINEERING
SIT São Bernardo - BRAZIL

CUSTOMER:	DRAWN	Richard Horn	ORIGINAL DATE
	CHK	Richard Horn	29/02/2012
PROJECT:	APPD	Marcos Gomes	SHEETS
LOCATION:	AUTH	11/A-006	SHEET 37

DRAFTED IN ACCORDANCE WITH OTIS DOCUMENT 52847

Rev. 2011-03-24

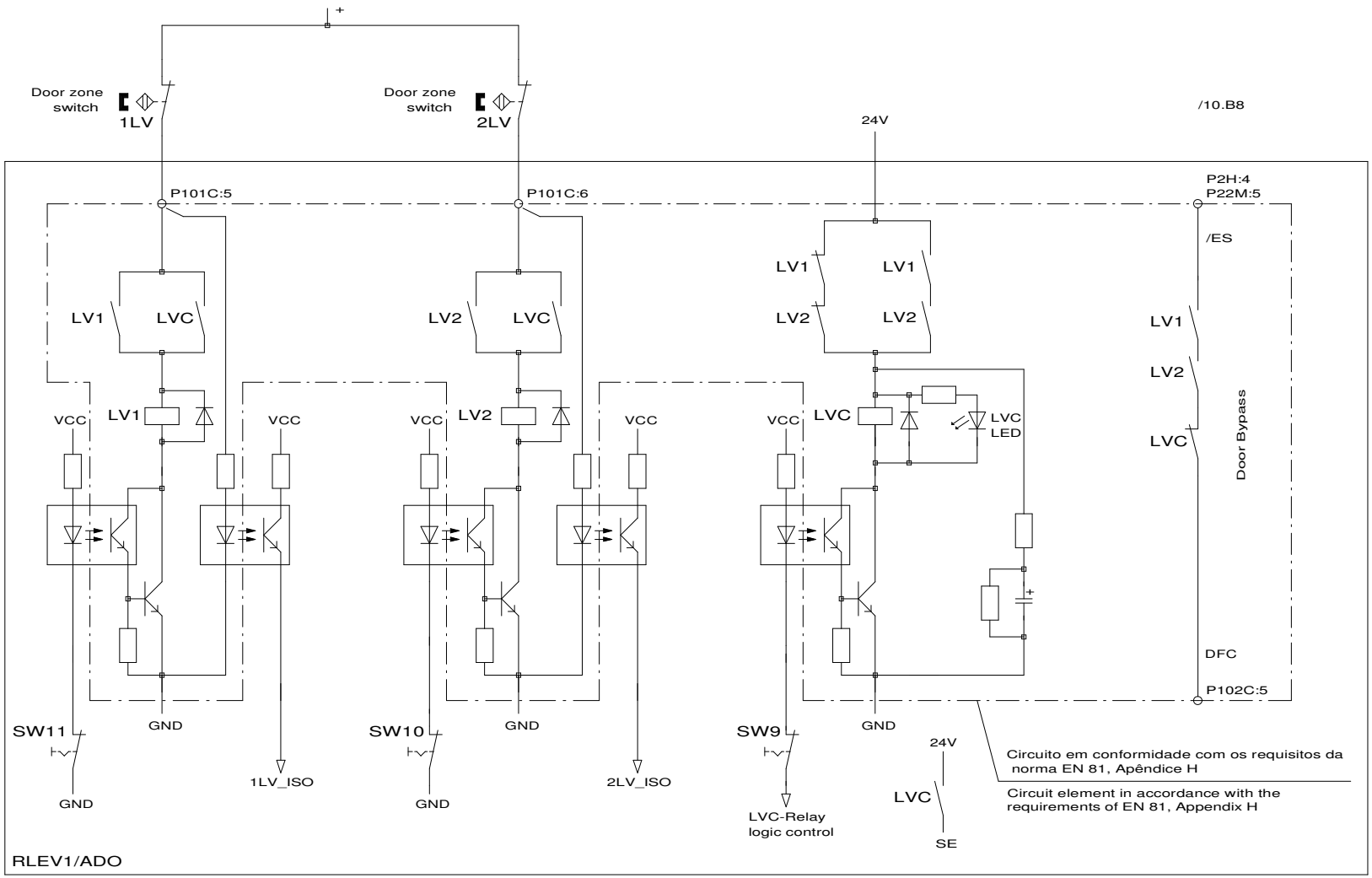

CHANGES

WARNING

THIS WORK AND THE INFORMATION IT CONTAINS ARE THE PROPERTY OF OTIS ELEVATOR COMPANY ("OTIS"). IT IS DELIVERED TO OTHERS ON THE EXPRESS CONDITION THAT IT WILL BE USED FOR, OR ON BEHALF OF, OTIS; THAT NEITHER IT NOR THE INFORMATION IT CONTAINS WILL BE REPRODUCED OR DISCLOSED, IN WHOLE OR IN PART, WITHOUT THE PRIOR WRITTEN CONCENT OF OTIS; AND THAT ON DEMAND IT AND ANY COPIES WILL BE PROMPTLY RETURNED TO OTIS.

UNPUBLISHED WORK © OTIS ELEVATOR COMPANY. ALL RIGHTS RESERVED

Otis
A United Technologies Company

Controller Wiring Diagram
Diagrama Elétrico do Controle

GeN2-Comfort / Regen-UD

DWG BAA21000H

OTIS ENGINEERING
SIT São Bernardo - BRAZIL

CUSTOMER:	DRAWN	Richard Horn	ORIGINAL DATE
	CHK	Richard Horn	29/02/2012
PROJECT:	APPD	Marcos Gomes	SHEETS
LOCATION:	AUTH	11/A-006	SHEET 38

DRAFTED IN ACCORDANCE WITH OTIS DOCUMENT 52847

Rev. 2011-03-24

GENERAL INFORMATION

Switch settings / configuration SW1
Remote station HBB - HBBA - HOB - SHL - HPI - RS5 - RS11 - RS14

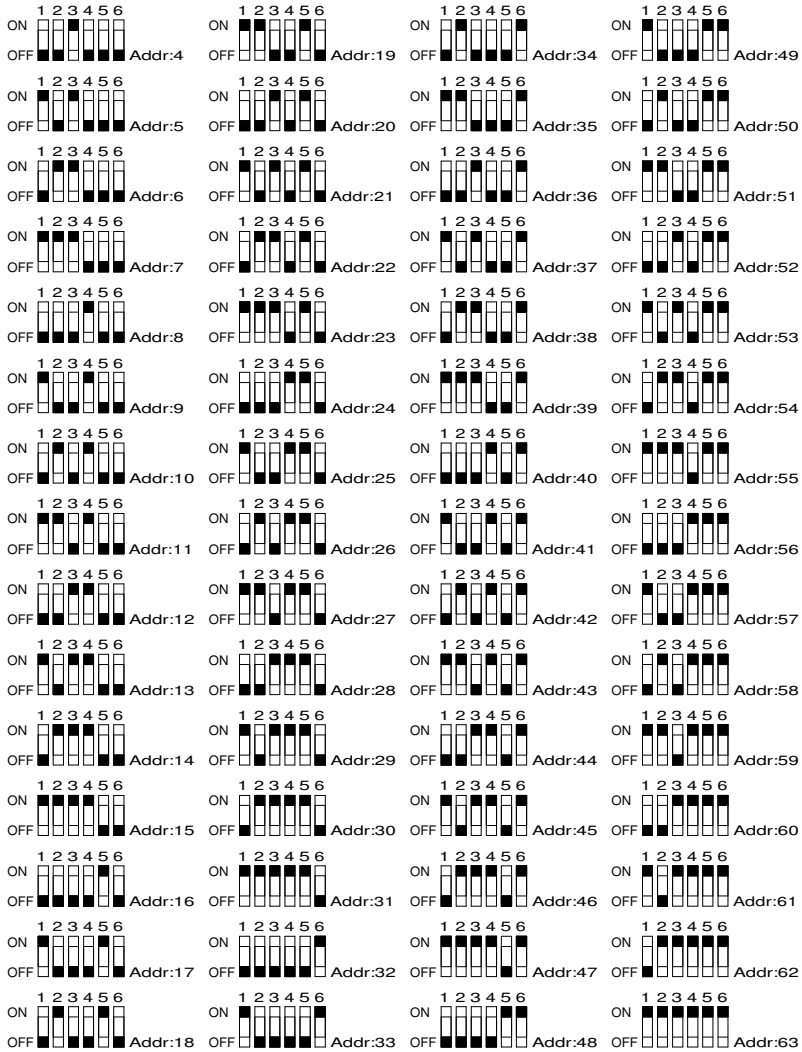

Jumper setting configuration
Remote station RS4 - RS4A - RS4R

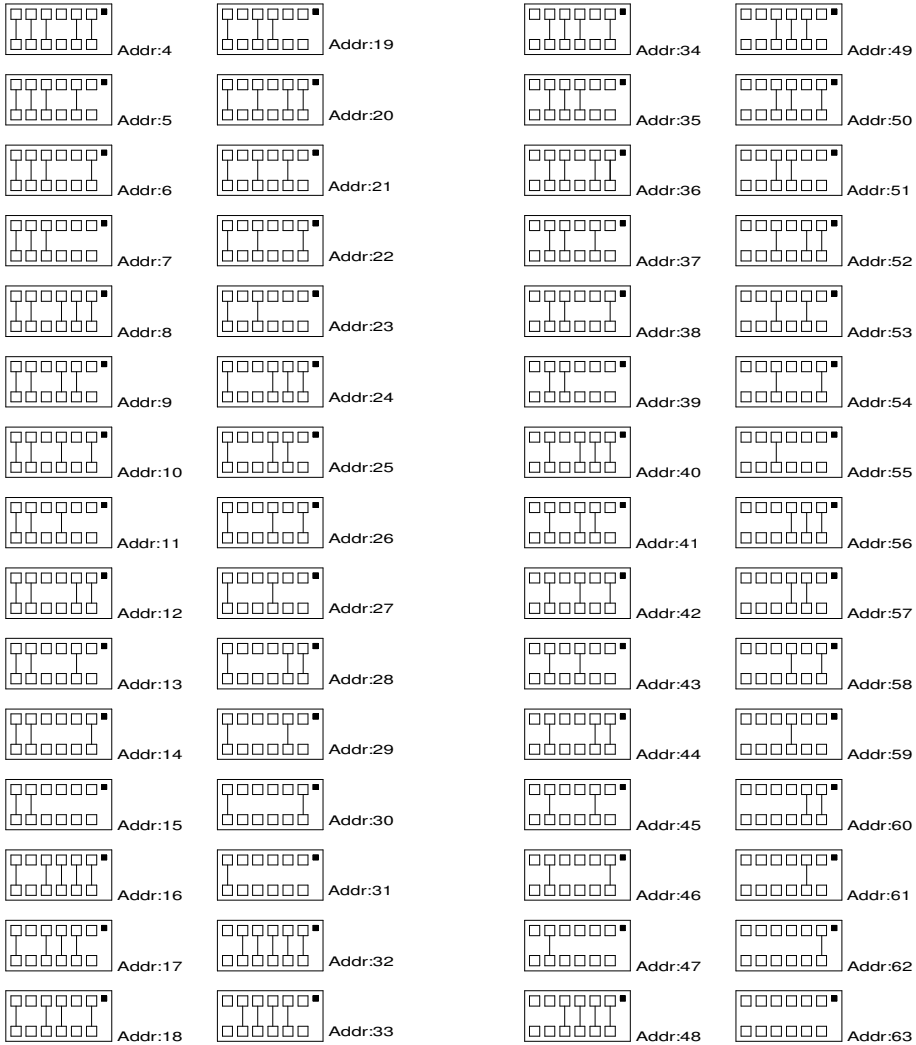

CHANGES

WARNING

THIS WORK AND THE INFORMATION IT CONTAINS ARE THE PROPERTY OF OTIS ELEVATOR COMPANY ("OTIS"). IT IS DELIVERED TO OTHERS ON THE EXPRESS CONDITION THAT IT WILL BE USED FOR, OR ON BEHALF OF, OTIS; THAT NEITHER IT NOR THE INFORMATION IT CONTAINS WILL BE REPRODUCED OR DISCLOSED, IN WHOLE OR IN PART, WITHOUT THE PRIOR WRITTEN CONCENT OF OTIS; AND THAT ON DEMAND IT AND ANY COPIES WILL BE PROMPTLY RETURNED TO OTIS.

UNPUBLISHED WORK © OTIS ELEVATOR COMPANY. ALL RIGHTS RESERVED

Otis
A United Technologies Company

Controller Wiring Diagram
Diagrama Elétrico do Controle

GeN2-Comfort / Regen-UD

DWG BAA21000H

OTIS ENGINEERING
SIT São Bernardo - BRAZIL

CUSTOMER:	DRAWN	Richard Horn	ORIGINAL DATE
	CHK	Richard Horn	29/02/2012
PROJECT:	APPD	Marcos Gomes	SHEETS
LOCATION:	AUTH	11/A-006	SHEET 39

DRAFTED IN ACCORDANCE WITH OTIS DOCUMENT 52847

Rev. 2011-03-24

Standard I/O List

POC / COP

Entradas / Input

Connecting on Remote Station Pins

RS n. # RS	I/O I/O	Simbolo Symbol	Descrição Description	End. Addr.	RS14 Bit Pin	RS5 Bit Pin
4	0001	DOB	Door Open Button	4	P1:2	
4	0032	CB / CTTL 0	Car Button / Tell Tale Light 0	4	P2:2	
4	0033	CB / CTTL 1	Car Button / Tell Tale Light 1	4	P3:2	
4	0034	CB / CTTL 2	Car Button / Tell Tale Light 2	4	P4:2	
5	0035	CB / CTTL 3	Car Button / Tell Tale Light 3	5	P1:2	
5	0036	CB / CTTL 4	Car Button / Tell Tale Light 4	5	P2:2	
5	0037	CB / CTTL 5	Car Button / Tell Tale Light 5	5	P3:2	
5	0038	CB / CTTL 6	Car Button / Tell Tale Light 6	5	P4:2	
6	0039	CB / CTTL 7	Car Button / Tell Tale Light 7	6	P1:2	
6	0040	CB / CTTL 8	Car Button / Tell Tale Light 8	6	P2:2	
6	0041	CB / CTTL 9	Car Button / Tell Tale Light 9	6	P3:2	
6	0042	CB / CTTL 10	Car Button / Tell Tale Light 10	6	P4:2	
7	0043	CB / CTTL 11	Car Button / Tell Tale Light 11	7	P1:2	
7	0044	CB / CTTL 12	Car Button / Tell Tale Light 12	7	P2:2	
7	0045	CB / CTTL 13	Car Button / Tell Tale Light 13	7	P3:2	
7	0046	CB / CTTL 14	Car Button / Tell Tale Light 14	7	P4:2	
8	0047	CB / CTTL 15	Car Button / Tell Tale Light 15	8	P1:2	
8	0003	DCB	Door Close Button	8	P2:2	
8	0004	ISS	Independent Service Switch	8	P3:2	
8	0956	2EFS	2nd Emergency Fireman Service Car	8	P4:2	
9	0048	CB / CTTL 16	Car Button / Tell Tale Light 16	9	P1:2	10
9	0049	CB / CTTL 17	Car Button / Tell Tale Light 17	9	P2:2	10
9	0050	CB / CTTL 18	Car Button / Tell Tale Light 18	9	P3:2	10
9	0051	CB / CTTL 19	Car Button / Tell Tale Light 19	9	P4:2	10
10	0052	CB / CTTL 20	Car Button / Tell Tale Light 20	10	P1:2	11
10	0053	CB / CTTL 21	Car Button / Tell Tale Light 21	10	P2:2	11
10	0054	CB / CTTL 22	Car Button / Tell Tale Light 22	10	P3:2	11
10	0055	CB / CTTL 23	Car Button / Tell Tale Light 23	10	P4:2	11
13	0768	CSAK	Car Secure Accees Keyswitch	13	P1:2	E5
13	0767	CSAC	Car Secure Accees Clear Switch	13	P2:2	E6
				13	P3:2	11
13	0548	ATK	Attendant Key Switch	13	P4:2	E8

Standard I/O List

POC / COP

Saídas / Output

Connecting on Remote Station Pins

RS n. # RS	I/O I/O	Simbolo Symbol	Descrição Description	End. Addr.	RS14 Bit Pin	RS5 Bit Pin
4	0023	BUZ	Buzzer	4	P1:4	
4	0032	CB / CTTL 0	Car Button / Tell Tale Light 0	4	P2:4	
4	0033	CB / CTTL 1	Car Button / Tell Tale Light 1	4	P3:4	
4	0034	CB / CTTL 2	Car Button / Tell Tale Light 2	4	P4:4	
5	0035	CB / CTTL 3	Car Button / Tell Tale Light 3	5	P1:4	
5	0036	CB / CTTL 4	Car Button / Tell Tale Light 4	5	P2:4	
5	0037	CB / CTTL 5	Car Button / Tell Tale Light 5	5	P3:4	
5	0038	CB / CTTL 6	Car Button / Tell Tale Light 6	5	P4:4	
6	0039	CB / CTTL 7	Car Button / Tell Tale Light 7	6	P1:4	
6	0040	CB / CTTL 8	Car Button / Tell Tale Light 8	6	P2:4	
6	0041	CB / CTTL 9	Car Button / Tell Tale Light 9	6	P3:4	
6	0042	CB / CTTL 10	Car Button / Tell Tale Light 10	6	P4:4	
7	0043	CB / CTTL 11	Car Button / Tell Tale Light 11	7	P1:4	
7	0044	CB / CTTL 12	Car Button / Tell Tale Light 12	7	P2:4	
7	0045	CB / CTTL 13	Car Button / Tell Tale Light 13	7	P3:4	
7	0046	CB / CTTL 14	Car Button / Tell Tale Light 14	7	P4:4	
8	0047	CB / CTTL 15	Car Button / Tell Tale Light 15	8	P1:4	
8				8	P2:4	
8				8	P3:4	
8	0022	OLS	Over Load Signal	8	P4:4	
9	0048	CB / CTTL 16	Car Button / Tell Tale Light 16	9	P1:4	
9	0049	CB / CTTL 17	Car Button / Tell Tale Light 17	9	P2:4	
9	0050	CB / CTTL 18	Car Button / Tell Tale Light 18	9	P3:4	
9	0051	CB / CTTL 19	Car Button / Tell Tale Light 19	9	P4:4	
10	0052	CB / CTTL 20	Car Button / Tell Tale Light 20	10	P1:4	
10	0053	CB / CTTL 21	Car Button / Tell Tale Light 21	10	P2:4	
10	0054	CB / CTTL 22	Car Button / Tell Tale Light 22	10	P3:4	
10	0055	CB / CTTL 23	Car Button / Tell Tale Light 23	10	P4:4	
13	0671	CBT or CSAL	Car Button Tone / Car Secure Accees Ligth (0769)	13	P1:4	E1
13	0026	LR	Light Relay	13	P2:4	E2
13	0020	CUDL	Car Up Direction Lantern	13	P3:4	E3
13	0021	CDDL	Car Down Direction Lantern	13	P4:4	E4

CHANGES

WARNING

THIS WORK AND THE INFORMATION IT CONTAINS ARE THE PROPERTY OF OTIS ELEVATOR COMPANY ("OTIS"). IT IS DELIVERED TO OTHERS ON THE EXPRESS CONDITION THAT IT WILL BE USED FOR, OR ON BEHALF OF, OTIS; THAT NEITHER IT NOR THE INFORMATION IT CONTAINS WILL BE REPRODUCED OR DISCLOSED, IN WHOLE OR IN PART, WITHOUT THE PRIOR WRITTEN CONCENT OF OTIS; AND THAT ON DEMAND IT AND ANY COPIES WILL BE PROMPTLY RETURNED TO OTIS.

UNPUBLISHED WORK © OTIS ELEVATOR COMPANY. ALL RIGHTS RESERVED

Otis
A United Technologies Company

Controller Wiring Diagram
Diagrama Elétrico do Controle

GeN2-Comfort / Regen-UD

DWG BAA21000H

OTIS ENGINEERING
SIT São Bernardo - BRAZIL

CUSTOMER:	DRAWN	Richard Horn	ORIGINAL DATE 29/02/2012
	CHK	Richard Horn	
PROJECT:	APPD	Marcos Gomes	SHEETS
LOCATION:	AUTH	11/A-006	SHEET 40

DRAFTED IN ACCORDANCE WITH OTIS DOCUMENT 52847

Rev. 2011-03-24

Standard I/O List

CAIXA DE CONEXÃO / J.BOX (TOC)

Entradas / Input

Connecting on Remote Station Pins

RS n. # RS	I/O I/O	Simbolo Symbol	Descrição Description	End. Addr.	RS14 Bit Pin	RS5 Bit Pin
17	0000	DOL	Door Open Limit	17	P1:2	
17	0691	TCI	Top of car Inspection Switch	17	P2:2	
17	0607	LRD	Light Ray Device	17	P3:2	
17	0605	DOS / SGS	Door Opening Signal / Safety Gate Shoe	17	P4:2	
18	0705	SAC	Top of car Door Open Button	18	P1:2	
18				18	P2:2	
18				18	P3:2	
18				18	P4:2	
19	0544	RDOL	Rear Door Open Limit	19	P1:2	
				19	P2:2	
19	0608	RLRD	Rear Light Ray Device	19	P3:2	
19	0606	RDOS / RSGS	Rear Door Open Signal / Rear SGS	19	P4:2	

Standard I/O List

CAIXA DE CONEXÃO / J.BOX (TOC)

Saídas / Output

Connecting on Remote Station Pins

RS n. # RS	I/O I/O	Simbolo Symbol	Descrição Description	End. Addr.	RS14 Bit Pin	RS5 Bit Pin
				17	P1:4	
17	0991	DOOR_ST1	ST1 for front DO1000 (DCSS5)	17	P2:4	
17	0992	DOOR_ST2	ST2 for front DO1000 (DCSS5)	17	P3:4	
17	0993	DOOR_ST3	ST3 for front+rear DO1000 (DCSS5)	17	P4:4	
18	0578	CDLU	Car Direction Lantern Up	18	P1:4	
18	0579	CDLD	Car Direction Lantern Down	18	P2:4	
18	0582	RCDLU	Rear Car Direction Lantern Up	18	P3:4	
18	0583	RCDLD	Rear Car Direction Lantern Down	18	P4:4	
				19	P1:4	
19	0994	DOOR_ST1R	ST1 for rear DO1000 (DCSS5)	19	P2:4	
19	0995	DOOR_ST2R	ST2 for rear DO1000 (DCSS5)	19	P3:4	
19	0996	DOOR_ST3R	ST3 for rear DO1000 (DCSS5)	19	P4:4	

CHANGES

WARNING

THIS WORK AND THE INFORMATION IT CONTAINS ARE THE PROPERTY OF OTIS ELEVATOR COMPANY ("OTIS"). IT IS DELIVERED TO OTHERS ON THE EXPRESS CONDITION THAT IT WILL BE USED FOR, OR ON BEHALF OF, OTIS; THAT NEITHER IT NOR THE INFORMATION IT CONTAINS WILL BE REPRODUCED OR DISCLOSED, IN WHOLE OR IN PART, WITHOUT THE PRIOR WRITTEN CONCENT OF OTIS; AND THAT ON DEMAND IT AND ANY COPIES WILL BE PROMPTLY RETURNED TO OTIS.

UNPUBLISHED WORK © OTIS ELEVATOR COMPANY. ALL RIGHTS RESERVED

Otis
A United Technologies Company

Controller Wiring Diagram
Diagrama Elétrico do Controle

GeN2-Comfort / Regen-UD

DWG BAA21000H

OTIS ENGINEERING
SIT São Bernardo - BRAZIL

CUSTOMER:	DRAWN	Richard Horn	ORIGINAL DATE 29/02/2012
	CHK	Richard Horn	
PROJECT:	APPD	Marcos Gomes	SHEETS
LOCATION:	AUTH	11/A-006	SHEET 41

DRAFTED IN ACCORDANCE WITH OTIS DOCUMENT 52847

Rev. 2011-03-24

Standard I/O List

HALL

Entradas / Input

Connecting on Remote Station Pins

RS n. # RS	I/O I/O	Simbolo Symbol	Descrição Description	End. Addr.	RS11 Bit Pin	RS14 Bit Pin
21	0096	HB / HBTTL 0	Hall Button / Tell Tale Light 0	21	P1:2	P1:2
				21		P2:2
				21		P3:2
				21		P4:2
22	0097	HB / HBTTL 1	Hall Button / Tell Tale Light 1	22	P1:2	P1:2
22	0065	UHB / UHTTL 1	Up Hall Button / Tell Tale Light 1	22		P2:2
				22		P3:2
				22		P4:2
23	0098	HB / HBTTL 2	Hall Button / Tell Tale Light 2	23	P1:2	P1:2
23	0066	UHB / UHTTL 2	Up Hall Button / Tell Tale Light 2	23		P2:2
				23		P3:2
				23		P4:2
24	0099	HB / HBTTL 3	Hall Button / Tell Tale Light 3	24	P1:2	P1:2
24	0067	UHB / UHTTL 3	Up Hall Button / Tell Tale Light 3	24		P2:2
				24		P3:2
				24		P4:2
25	0100	HB / HBTTL 4	Hall Button / Tell Tale Light 4	25	P1:2	P1:2
25	0068	UHB / UHTTL 4	Up Hall Button / Tell Tale Light 4	25		P2:2
				25		P3:2
				25		P4:2
26	0101	HB / HBTTL 5	Hall Button / Tell Tale Light 5	26	P1:2	P1:2
26	0069	UHB / UHTTL 5	Up Hall Button / Tell Tale Light 5	26		P2:2
				26		P3:2
				26		P4:2
27	0102	HB / HBTTL 6	Hall Button / Tell Tale Light 6	27	P1:2	P1:2
27	0070	UHB / UHTTL 6	Up Hall Button / Tell Tale Light 6	27		P2:2
				27		P3:2
				27		P4:2
28	0103	HB / HBTTL 7	Hall Button / Tell Tale Light 7	28	P1:2	P1:2
28	0071	UHB / UHTTL 7	Up Hall Button / Tell Tale Light 7	28		P2:2
				28		P3:2
				28		P4:2

Standard I/O List

HALL

Saídas / Output

Connecting on Remote Station Pins

RS n. # RS	I/O I/O	Simbolo Symbol	Descrição Description	End. Addr.	RS11 Bit Pin	RS14 Bit Pin
21	0096	HB / HBTTL 0	Hall Button / Tell Tale Light 0	21	P1:2	P1:2
				21		P2:2
21	0846	DHDL 0	Down Hall Direction Lantern 0	21		P3:2
21	0814	UHDL 0	Up Hall Direction Lantern 0	21		P4:2
22	0097	HB / HBTTL 1	Hall Button / Tell Tale Light 1	22	P1:2	P1:2
22	0065	UHB / UHTTL 1	Up Hall Button / Tell Tale Light 1	22		P2:2
22	0847	DHDL 1	Down Hall Direction Lantern 1	22		P3:2
22	0815	UHDL 1	Up Hall Direction Lantern 1	22		P4:2
23	0098	HB / HBTTL 2	Hall Button / Tell Tale Light 2	23	P1:2	P1:2
23	0066	UHB / UHTTL 2	Up Hall Button / Tell Tale Light 2	23		P2:2
23	0848	DHDL 2	Down Hall Direction Lantern 2	23		P3:2
23	0816	UHDL 2	Up Hall Direction Lantern 2	23		P4:2
24	0099	HB / HBTTL 3	Hall Button / Tell Tale Light 3	24	P1:2	P1:2
24	0067	UHB / UHTTL 3	Up Hall Button / Tell Tale Light 3	24		P2:2
24	0849	DHDL 3	Down Hall Direction Lantern 3	24		P3:2
24	0817	UHDL 3	Up Hall Direction Lantern 3	24		P4:2
25	0100	HB / HBTTL 4	Hall Button / Tell Tale Light 4	25	P1:2	P1:2
25	0068	UHB / UHTTL 4	Up Hall Button / Tell Tale Light 4	25		P2:2
25	0850	DHDL 4	Down Hall Direction Lantern 4	25		P3:2
25	0818	UHDL 4	Up Hall Direction Lantern 4	25		P4:2
26	0101	HB / HBTTL 5	Hall Button / Tell Tale Light 5	26	P1:2	P1:2
26	0069	UHB / UHTTL 5	Up Hall Button / Tell Tale Light 5	26		P2:2
26	0851	DHDL 5	Down Hall Direction Lantern 5	26		P3:2
26	0819	UHDL 5	Up Hall Direction Lantern 5	26		P4:2
27	0102	HB / HBTTL 6	Hall Button / Tell Tale Light 6	27	P1:2	P1:2
27	0070	UHB / UHTTL 6	Up Hall Button / Tell Tale Light 6	27		P2:2
27	0852	DHDL 6	Down Hall Direction Lantern 6	27		P3:2
27	0820	UHDL 6	Up Hall Direction Lantern 6	27		P4:2
28	0103	HB / HBTTL 7	Hall Button / Tell Tale Light 7	28	P1:2	P1:2
28	0071	UHB / UHTTL 7	Up Hall Button / Tell Tale Light 7	28		P2:2
28	0853	DHDL 7	Down Hall Direction Lantern 7	28		P3:2
28	0821	UHDL 7	Up Hall Direction Lantern 7	28		P4:2

CHANGES

WARNING

THIS WORK AND THE INFORMATION IT CONTAINS ARE THE PROPERTY OF OTIS ELEVATOR COMPANY ("OTIS"). IT IS DELIVERED TO OTHERS ON THE EXPRESS CONDITION THAT IT WILL BE USED FOR, OR ON BEHALF OF, OTIS; THAT NEITHER IT NOR THE INFORMATION IT CONTAINS WILL BE REPRODUCED OR DISCLOSED, IN WHOLE OR IN PART, WITHOUT THE PRIOR WRITTEN CONCENT OF OTIS; AND THAT ON DEMAND IT AND ANY COPIES WILL BE PROMPTLY RETURNED TO OTIS.

UNPUBLISHED WORK © OTIS ELEVATOR COMPANY. ALL RIGHTS RESERVED

Otis
A United Technologies Company

Controller Wiring Diagram
Diagrama Elétrico do Controle

GeN2-Comfort / Regen-UD

DWG BAA21000H

OTIS ENGINEERING
SIT São Bernardo - BRAZIL

CUSTOMER:	DRAWN	Richard Horn	ORIGINAL DATE 29/02/2012
	CHK	Richard Horn	
PROJECT:	APPD	Marcos Gomes	SHEETS
LOCATION:	AUTH	11/A-006	SHEET 42

DRAFTED IN ACCORDANCE WITH OTIS DOCUMENT 52847

Rev. 2011-03-24

Standard I/O List

HALL

Entradas / Input

Connecting on Remote Station Pins

RS n. # RS	I/O I/O	Simbolo Symbol	Descrição Description	End. Addr.	RS11 Bit Pin	RS14 Bit Pin
29	0104	HB / HBTTL 8	Hall Button / Tell Tale Light 8	29	P1:2	P1:2
29	0072	UHB / UHTTL 8	Up Hall Button / Tell Tale Light 8	29		P2:2
				29		P3:2
				29		P4:2
30	0105	HB / HBTTL 9	Hall Button / Tell Tale Light 9	30	P1:2	P1:2
30	0073	UHB / UHTTL 9	Up Hall Button / Tell Tale Light 9	30		P2:2
				30		P3:2
				30		P4:2
31	0106	HB / HBTTL 10	Hall Button / Tell Tale Light 10	31	P1:2	P1:2
31	0074	UHB / UHTTL 10	Up Hall Button / Tell Tale Light 10	31		P2:2
				31		P3:2
				31		P4:2
32	0107	HB / HBTTL 11	Hall Button / Tell Tale Light 11	32	P1:2	P1:2
32	0075	UHB / UHTTL 11	Up Hall Button / Tell Tale Light 11	32		P2:2
				32		P3:2
				32		P4:2
33	0108	HB / HBTTL 12	Hall Button / Tell Tale Light 12	33	P1:2	P1:2
33	0076	UHB / UHTTL 12	Up Hall Button / Tell Tale Light 12	33		P2:2
				33		P3:2
				33		P4:2
34	0109	HB / HBTTL 13	Hall Button / Tell Tale Light 13	34	P1:2	P1:2
34	0077	UHB / UHTTL 13	Up Hall Button / Tell Tale Light 13	34		P2:2
				34		P3:2
				34		P4:2
35	0110	HB / HBTTL 14	Hall Button / Tell Tale Light 14	35	P1:2	P1:2
35	0078	UHB / UHTTL 14	Up Hall Button / Tell Tale Light 14	35		P2:2
				35		P3:2
				35		P4:2
36	0111	HB / HBTTL 15	Hall Button / Tell Tale Light 15	36	P1:2	P1:2
36	0079	UHB / UHTTL 15	Up Hall Button / Tell Tale Light 15	36		P2:2
				36		P3:2
				36		P4:2

Standard I/O List

HALL

Saídas / Output

Connecting on Remote Station Pins

RS n. # RS	I/O I/O	Simbolo Symbol	Descrição Description	End. Addr.	RS11 Bit Pin	RS14 Bit Pin
29	0104	HB / HBTTL 8	Hall Button / Tell Tale Light 8	29	P1:2	P1:2
29	0072	UHB / UHTTL 8	Up Hall Button / Tell Tale Light 8	29		P2:2
29	0854	DHDL 8	Down Hall Direction Lantern 8	29		P3:2
29	0822	UHDL 8	Up Hall Direction Lantern 8	29		P4:2
30	0105	HB / HBTTL 9	Hall Button / Tell Tale Light 9	30	P1:2	P1:2
30	0073	UHB / UHTTL 9	Up Hall Button / Tell Tale Light 9	30		P2:2
30	0855	DHDL 9	Down Hall Direction Lantern 9	30		P3:2
30	0823	UHDL 9	Up Hall Direction Lantern 9	30		P4:2
31	0106	HB / HBTTL 10	Hall Button / Tell Tale Light 10	31	P1:2	P1:2
31	0074	UHB / UHTTL 10	Up Hall Button / Tell Tale Light 10	31		P2:2
31	0856	DHDL 10	Down Hall Direction Lantern 10	31		P3:2
31	0824	UHDL 10	Up Hall Direction Lantern 10	31		P4:2
32	0107	HB / HBTTL 11	Hall Button / Tell Tale Light 11	32	P1:2	P1:2
32	0075	UHB / UHTTL 11	Up Hall Button / Tell Tale Light 11	32		P2:2
32	0857	DHDL 11	Down Hall Direction Lantern 11	32		P3:2
32	0825	UHDL 11	Up Hall Direction Lantern 11	32		P4:2
33	0108	HB / HBTTL 12	Hall Button / Tell Tale Light 12	33	P1:2	P1:2
33	0076	UHB / UHTTL 12	Up Hall Button / Tell Tale Light 12	33		P2:2
33	0858	DHDL 12	Down Hall Direction Lantern 12	33		P3:2
33	0826	UHDL 12	Up Hall Direction Lantern 12	33		P4:2
34	0109	HB / HBTTL 13	Hall Button / Tell Tale Light 13	34	P1:2	P1:2
34	0077	UHB / UHTTL 13	Up Hall Button / Tell Tale Light 13	34		P2:2
34	0859	DHDL 13	Down Hall Direction Lantern 13	34		P3:2
34	0827	UHDL 13	Up Hall Direction Lantern 13	34		P4:2
35	0110	HB / HBTTL 14	Hall Button / Tell Tale Light 14	35	P1:2	P1:2
35	0078	UHB / UHTTL 14	Up Hall Button / Tell Tale Light 14	35		P2:2
35	0860	DHDL 14	Down Hall Direction Lantern 14	35		P3:2
35	0828	UHDL 14	Up Hall Direction Lantern 14	35		P4:2
36	0111	HB / HBTTL 15	Hall Button / Tell Tale Light 15	36	P1:2	P1:2
36	0079	UHB / UHTTL 15	Up Hall Button / Tell Tale Light 15	36		P2:2
36	0861	DHDL 15	Down Hall Direction Lantern 15	36		P3:2
36	0829	UHDL 15	Up Hall Direction Lantern 15	36		P4:2

CHANGES

WARNING

THIS WORK AND THE INFORMATION IT CONTAINS ARE THE PROPERTY OF OTIS ELEVATOR COMPANY ("OTIS"). IT IS DELIVERED TO OTHERS ON THE EXPRESS CONDITION THAT IT WILL BE USED FOR, OR ON BEHALF OF, OTIS; THAT NEITHER IT NOR THE INFORMATION IT CONTAINS WILL BE REPRODUCED OR DISCLOSED, IN WHOLE OR IN PART, WITHOUT THE PRIOR WRITTEN CONCENT OF OTIS; AND THAT ON DEMAND IT AND ANY COPIES WILL BE PROMPTLY RETURNED TO OTIS.

UNPUBLISHED WORK © OTIS ELEVATOR COMPANY. ALL RIGHTS RESERVED

Otis
A United Technologies Company

Controller Wiring Diagram
Diagrama Elétrico do Controle

GeN2-Comfort / Regen-UD

DWG BAA21000H

OTIS ENGINEERING
SIT São Bernardo - BRAZIL

CUSTOMER:	DRAWN	Richard Horn	ORIGINAL DATE 29/02/2012
	CHK	Richard Horn	
PROJECT:	APPD	Marcos Gomes	SHEETS
LOCATION:	AUTH	11/A-006	SHEET 43

DRAFTED IN ACCORDANCE WITH OTIS DOCUMENT 52847

Rev. 2011-03-24

Standard I/O List

HALL

Entradas / Input

Connecting on Remote Station Pins

RS n. # RS	I/O I/O	Simbolo Symbol	Descrição Description	End. Addr.	RS11 Bit Pin	RS14 Bit Pin
37	0112	HB / HBTTL 16	Hall Button / Tell Tale Light 16	37	P1:2	P1:2
37	0080	UHB / UHTTL 16	Up Hall Button / Tell Tale Light 16	37		P2:2
				37		P3:2
				37		P4:2
38	0113	HB / HBTTL 17	Hall Button / Tell Tale Light 17	38	P1:2	P1:2
38	0081	UHB / UHTTL 17	Up Hall Button / Tell Tale Light 17	38		P2:2
				38		P3:2
				38		P4:2
39	0114	HB / HBTTL 18	Hall Button / Tell Tale Light 18	39	P1:2	P1:2
39	0082	UHB / UHTTL 18	Up Hall Button / Tell Tale Light 18	39		P2:2
				39		P3:2
				39		P4:2
40	0115	HB / HBTTL 19	Hall Button / Tell Tale Light 19	40	P1:2	P1:2
40	0083	UHB / UHTTL 19	Up Hall Button / Tell Tale Light 19	40		P2:2
				40		P3:2
				40		P4:2
41	0116	HB / HBTTL 20	Hall Button / Tell Tale Light 20	41	P1:2	P1:2
41	0084	UHB / UHTTL 20	Up Hall Button / Tell Tale Light 20	41		P2:2
				41		P3:2
				41		P4:2
42	0117	HB / HBTTL 21	Hall Button / Tell Tale Light 21	42	P1:2	P1:2
42	0085	UHB / UHTTL 21	Up Hall Button / Tell Tale Light 21	42		P2:2
				42		P3:2
				42		P4:2
43	0118	HB / HBTTL 22	Hall Button / Tell Tale Light 22	43	P1:2	P1:2
43	0086	UHB / UHTTL 22	Up Hall Button / Tell Tale Light 22	43		P2:2
				43		P3:2
				43		P4:2
44	0119	HB / HBTTL 23	Hall Button / Tell Tale Light 23	44	P1:2	P1:2
44	0087	UHB / UHTTL 23	Up Hall Button / Tell Tale Light 23	44		P2:2
				44		P3:2
				44		P4:2

Standard I/O List

HALL

Saídas / Output

Connecting on Remote Station Pins

RS n. # RS	I/O I/O	Simbolo Symbol	Descrição Description	End. Addr.	RS11 Bit Pin	RS14 Bit Pin
37	0112	HB / HBTTL 16	Hall Button / Tell Tale Light 16	37	P1:2	P1:2
37	0080	UHB / UHTTL 16	Up Hall Button / Tell Tale Light 16	37		P2:2
37	0862	DHDL 16	Down Hall Direction Lantern 16	37		P3:2
37	0830	UHDL 16	Up Hall Direction Lantern 16	37		P4:2
38	0113	HB / HBTTL 17	Hall Button / Tell Tale Light 17	38	P1:2	P1:2
38	0081	UHB / UHTTL 17	Up Hall Button / Tell Tale Light 17	38		P2:2
38	0863	DHDL 17	Down Hall Direction Lantern 17	38		P3:2
38	0831	UHDL 17	Up Hall Direction Lantern 17	38		P4:2
39	0114	HB / HBTTL 18	Hall Button / Tell Tale Light 18	39	P1:2	P1:2
39	0082	UHB / UHTTL 18	Up Hall Button / Tell Tale Light 18	39		P2:2
39	0864	DHDL 18	Down Hall Direction Lantern 18	39		P3:2
39	0832	UHDL 18	Up Hall Direction Lantern 18	39		P4:2
40	0115	HB / HBTTL 19	Hall Button / Tell Tale Light 19	40	P1:2	P1:2
40	0083	UHB / UHTTL 19	Up Hall Button / Tell Tale Light 19	40		P2:2
40	0865	DHDL 19	Down Hall Direction Lantern 19	40		P3:2
40	0833	UHDL 19	Up Hall Direction Lantern 19	40		P4:2
41	0116	HB / HBTTL 20	Hall Button / Tell Tale Light 20	41	P1:2	P1:2
41	0084	UHB / UHTTL 20	Up Hall Button / Tell Tale Light 20	41		P2:2
41	0866	DHDL 20	Down Hall Direction Lantern 20	41		P3:2
41	0834	UHDL 20	Up Hall Direction Lantern 20	41		P4:2
42	0117	HB / HBTTL 21	Hall Button / Tell Tale Light 21	42	P1:2	P1:2
42	0085	UHB / UHTTL 21	Up Hall Button / Tell Tale Light 21	42		P2:2
42	0867	DHDL 21	Down Hall Direction Lantern 21	42		P3:2
42	0835	UHDL 21	Up Hall Direction Lantern 21	42		P4:2
43	0118	HB / HBTTL 22	Hall Button / Tell Tale Light 22	43	P1:2	P1:2
43	0086	UHB / UHTTL 22	Up Hall Button / Tell Tale Light 22	43		P2:2
43	0868	DHDL 22	Down Hall Direction Lantern 22	43		P3:2
43	0836	UHDL 22	Up Hall Direction Lantern 22	43		P4:2
44	0119	HB / HBTTL 23	Hall Button / Tell Tale Light 23	44	P1:2	P1:2
44	0087	UHB / UHTTL 23	Up Hall Button / Tell Tale Light 23	44		P2:2
44	0869	DHDL 23	Down Hall Direction Lantern 23	44		P3:2
44	0837	UHDL 23	Up Hall Direction Lantern 23	44		P4:2

CHANGES

WARNING

THIS WORK AND THE INFORMATION IT CONTAINS ARE THE PROPERTY OF OTIS ELEVATOR COMPANY ("OTIS"). IT IS DELIVERED TO OTHERS ON THE EXPRESS CONDITION THAT IT WILL BE USED FOR, OR ON BEHALF OF, OTIS; THAT NEITHER IT NOR THE INFORMATION IT CONTAINS WILL BE REPRODUCED OR DISCLOSED, IN WHOLE OR IN PART, WITHOUT THE PRIOR WRITTEN CONCENT OF OTIS; AND THAT ON DEMAND IT AND ANY COPIES WILL BE PROMPTLY RETURNED TO OTIS.

UNPUBLISHED WORK © OTIS ELEVATOR COMPANY. ALL RIGHTS RESERVED

Otis
A United Technologies Company

Controller Wiring Diagram
Diagrama Elétrico do Controle

GeN2-Comfort / Regen-UD

DWG BAA21000H

OTIS ENGINEERING
SIT São Bernardo - BRAZIL

CUSTOMER:	DRAWN	Richard Horn	ORIGINAL DATE 29/02/2012
	CHK	Richard Horn	
PROJECT:	APPD	Marcos Gomes	SHEETS
LOCATION:	AUTH	11/A-006	SHEET 44

DRAFTED IN ACCORDANCE WITH OTIS DOCUMENT 52847

Rev. 2011-03-24

Standard I/O List

OPC / OPT

Entradas / Input

Connecting on Remote Station Pins

RS n. # RS	I/O I/O	Simbolo Symbol	Descrição Description	End. Addr.	RS05 Bit Pin	RS14 Bit Pin
51				51	P1:2	P1:2
						P2:2
						P3:2
						P4:2
52				52	P1:2	P1:2
						P2:2
						P3:2
						P4:2
53	0011	PKS	Parking Switch	53	P1:2	P1:2
						P2:2
						P3:2
						P4:2
54	0016	EFK	Emergency Fireman Keyswitch	54	P1:2	P1:2
						P2:2
						P3:2
						P4:2
					P1:2	P1:2
						P2:2
						P3:2
						P4:2
					P1:2	P1:2
						P2:2
						P3:2
						P4:2
					P1:2	P1:2
						P2:2
						P3:2
						P4:2
61						P1:2
61						P2:2
						P3:2
						P4:2

Standard I/O List

OPC / OPT

Saídas / Output

Connecting on Remote Station Pins

RS n. # RS	I/O I/O	Simbolo Symbol	Descrição Description	End. Addr.	RS05 Bit Pin	RS14 Bit Pin
51				51		P1:2
						P2:2
						P3:2
						P4:2
				52	E1	P1:2
52	0951	OLMT	Overload Message Trigger	52	E2	P2:2
						P3:2
						P4:2
53	0954	DNMT	Door Nudging Message Trigger	53	E1	P1:2
						P2:2
						P3:2
						P4:2
54	0716	EFL	Emergency Fireman Light	54	E1	P1:2
						P2:2
						P3:2
						P4:2
57	0029	STH	Stop Signal Hall	57	E1	P1:2
57	0030	STC	Stop Signal Car	57	E1	P1:2
				57	E3	P3:2
57	0674	DO	Door Opening for REM	57	E4	P4:2
						P1:2
						P2:2
						P3:2
						P4:2
						P1:2
						P2:2
						P3:2
						P4:2
61	0549	HUDL	Hall Up Direction Lantern	61	E1	P1:2
61	0550	HDDL	Hall Down Direction Lantern	61	E2	P2:2
						P3:2
						P4:2

CHANGES

WARNING

THIS WORK AND THE INFORMATION IT CONTAINS ARE THE PROPERTY OF OTIS ELEVATOR COMPANY ("OTIS"). IT IS DELIVERED TO OTHERS ON THE EXPRESS CONDITION THAT IT WILL BE USED FOR, OR ON BEHALF OF, OTIS; THAT NEITHER IT NOR THE INFORMATION IT CONTAINS WILL BE REPRODUCED OR DISCLOSED, IN WHOLE OR IN PART, WITHOUT THE PRIOR WRITTEN CONCENT OF OTIS; AND THAT ON DEMAND IT AND ANY COPIES WILL BE PROMPTLY RETURNED TO OTIS.

UNPUBLISHED WORK © OTIS ELEVATOR COMPANY. ALL RIGHTS RESERVED

Otis
A United Technologies Company

Controller Wiring Diagram
Diagrama Elétrico do Controle

GeN2-Comfort / Regen-UD

DWG BAA21000H

OTIS ENGINEERING
SIT São Bernardo - BRAZIL

CUSTOMER:	DRAWN	Richard Horn	ORIGINAL DATE 29/02/2012
	CHK	Richard Horn	
PROJECT:	APPD	Marcos Gomes	SHEETS
LOCATION:	AUTH	11/A-006	SHEET 45

DRAFTED IN ACCORDANCE WITH OTIS DOCUMENT 52847

Rev. 2011-03-24