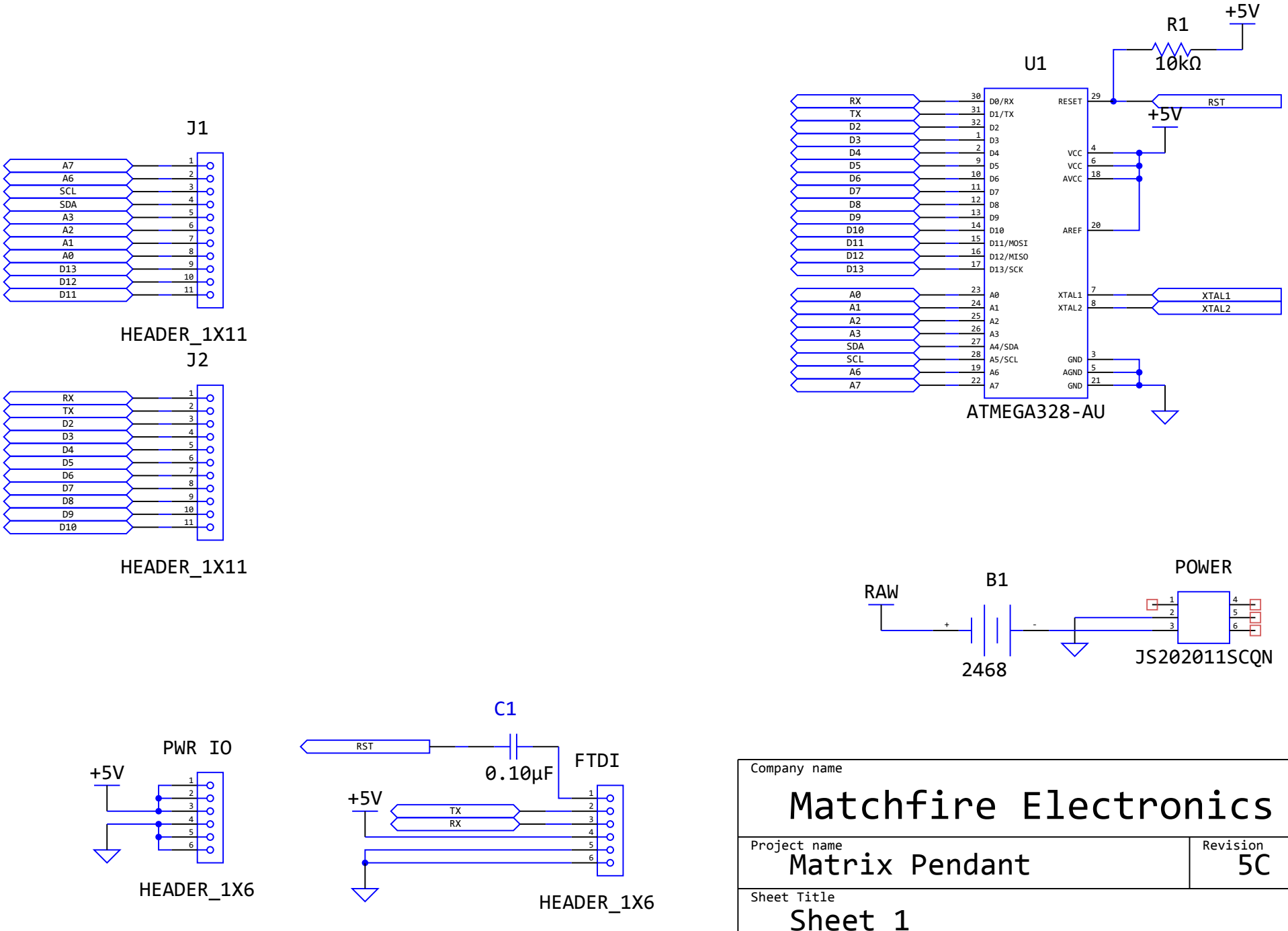

Company name

Matchfire Electronics

Project name

Matrix Pendant

Revision

5C

Sheet Title

Sheet 1

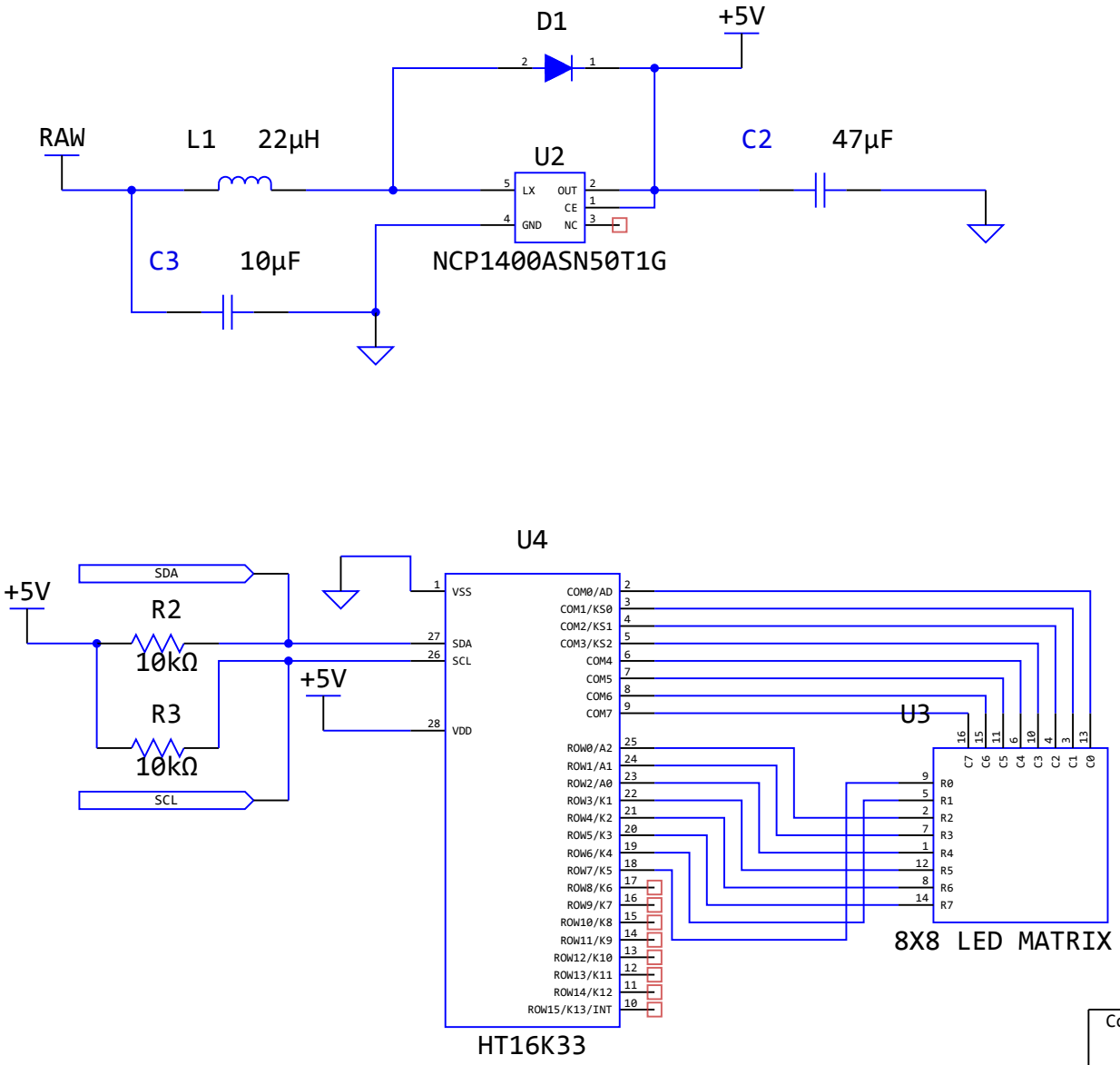

Company name

Matchfire Electronics

Project name

Matrix Pendant

Revision

5C

Sheet Title

Regulator + Matrix