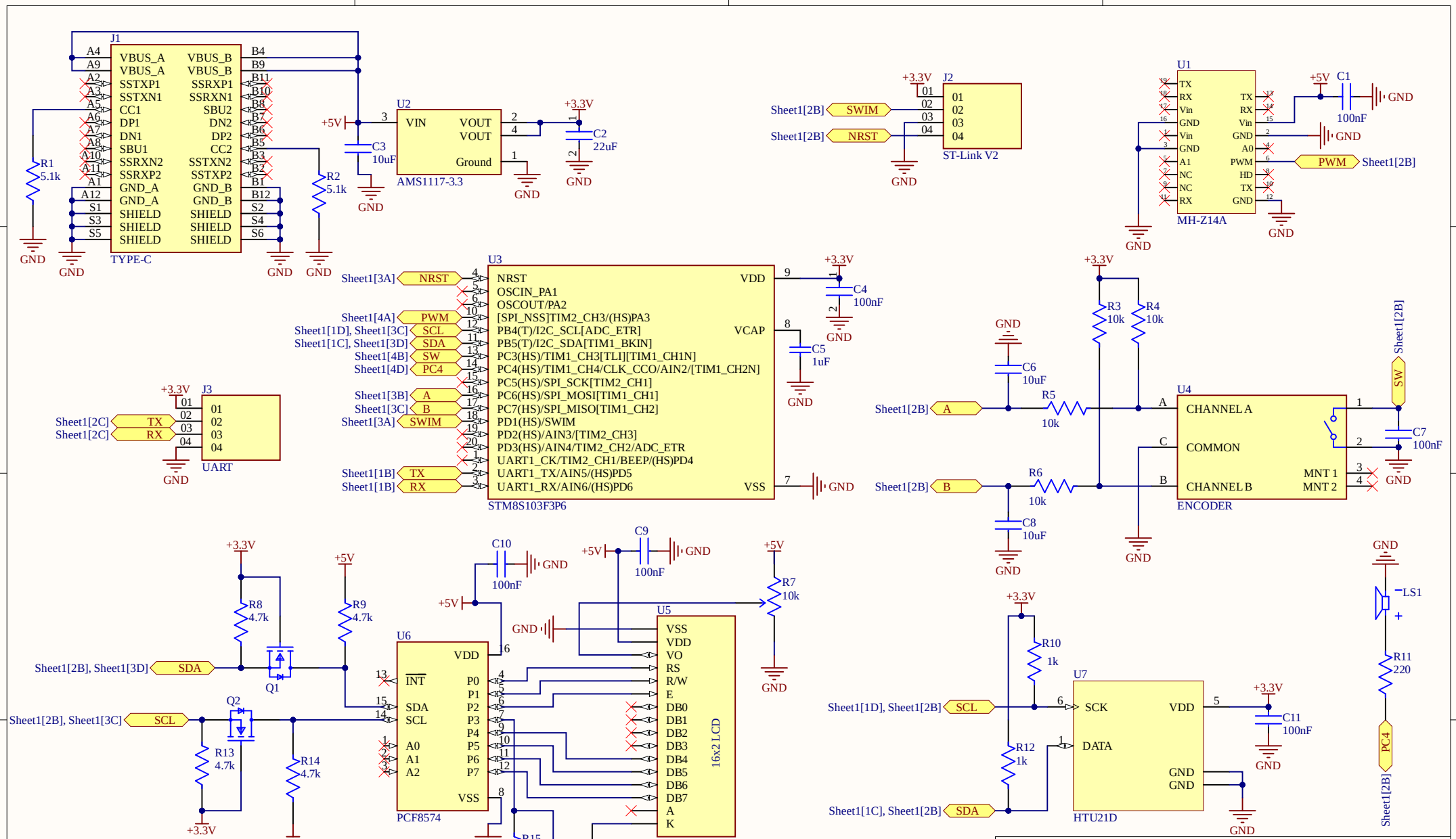
J1
TYPE-C
VBUS_A
VBUS_B
SSTXP1
SSTXN1
CC1
DP1
DN1
SBU1
SSRXN2
SSRXP2
GND_A
SHIELD
SBU2
DN2
DP2
CC2
SSTXN2
SSTXP2
GND_B
R1 5.1k
R2 5.1k
U2
AMS1117-3.3
VIN
VOUT
Ground
C3 10uF
C2 22uF
+5V
+3.3V
GND
J2
ST-Link V2
Sheet1[2B] SWIM
Sheet1[2B] NRST
U1
MH-Z14A
TX
RX
Vin
GND
A1
NC
A0
PWM
HD
C1 100nF
Sheet1[2B] PWM
U3
STM8S103F3P6
NRST
OSCIN_PA1
OSCOUT/PA2
[SPI_NSS]TIM2_CH3/(HS)PA3
PB4(T)/I2C_SCL[ADC_ETR]
PB5(T)/I2C_SDA[TIM1_BKIN]
PC3(HS)/TIM1_CH3[TLI][TIM1_CH1N]
PC4(HS)/TIM1_CH4/CLK_CCO/AIN2/[TIM1_CH2N]
PC5(HS)/SPI_SCK[TIM2_CH1]
PC6(HS)/SPI_MOSI[TIM1_CH1]
PC7(HS)/SPI_MISO[TIM1_CH2]
PD1(HS)/SWIM
PD2(HS)/AIN3/[TIM2_CH3]
PD3(HS)/AIN4/TIM2_CH2/ADC_ETR
UART1_CK/TIM2_CH1/BEEP/(HS)PD4
UART1_TX/AIN5/(HS)PD5
UART1_RX/AIN6/(HS)PD6
VDD
VCAP
VSS
C4 100nF
C5 1uF
Sheet1[3A] NRST
Sheet1[4A] PWM
Sheet1[1D], Sheet1[3C] SCL
Sheet1[1C], Sheet1[3D] SDA
Sheet1[4B] SW
Sheet1[4D] PC4
Sheet1[3B] A
Sheet1[3C] B
Sheet1[3A] SWIM
Sheet1[1B] TX
Sheet1[1B] RX
J3
UART
Sheet1[2C] TX
Sheet1[2C] RX
U4
ENCODER
CHANNEL A
COMMON
CHANNEL B
MNT 1
MNT 2
R3 10k
R4 10k
R5 10k
R6 10k
C6 10uF
C8 10uF
C7 100nF
Sheet1[2B] A
Sheet1[2B] B
Sheet1[2B] SW
U5
LCD-16X2
16x2 LCD
VSS
VDD
VO
RS
R/W
E
DB0
DB1
DB2
DB3
DB4
DB5
DB6
DB7
A
K
C9 100nF
C10 100nF
R7 10k
U6
PCF8574
INT
SDA
SCL
A0
A1
A2
P0
P1
P2
P3
P4
P5
P6
P7
R8 4.7k
R9 4.7k
R13 4.7k
R14 4.7k
R15 4.7k
Q1
Q2
Q3
Sheet1[2B], Sheet1[3D] SDA
Sheet1[2B], Sheet1[3C] SCL
U7
HTU21D
SCK
DATA
R10 1k
R12 1k
C11 100nF
Sheet1[1D], Sheet1[2B] SCL
Sheet1[1C], Sheet1[2B] SDA
LS1
R11 220
PC4
Sheet1[2B]
Title
Система моніторингу температури, вологості та CO2
Size
A4
Number
Revision
V 1.1
Date: 10.09.2025
File: C:\Users\..\Sheet1.SchDoc
Sheet of
Drawn By: Андрій Бондар