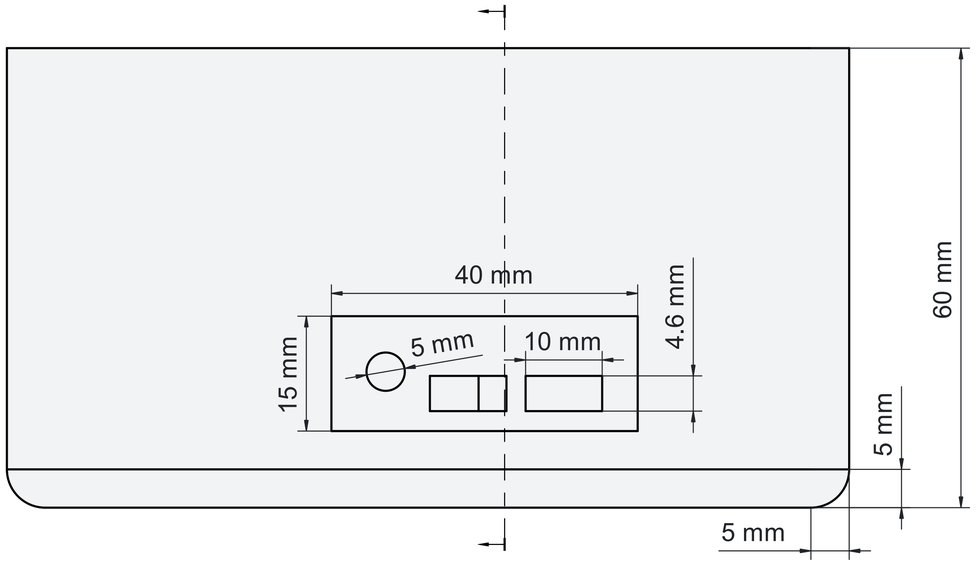

Side View

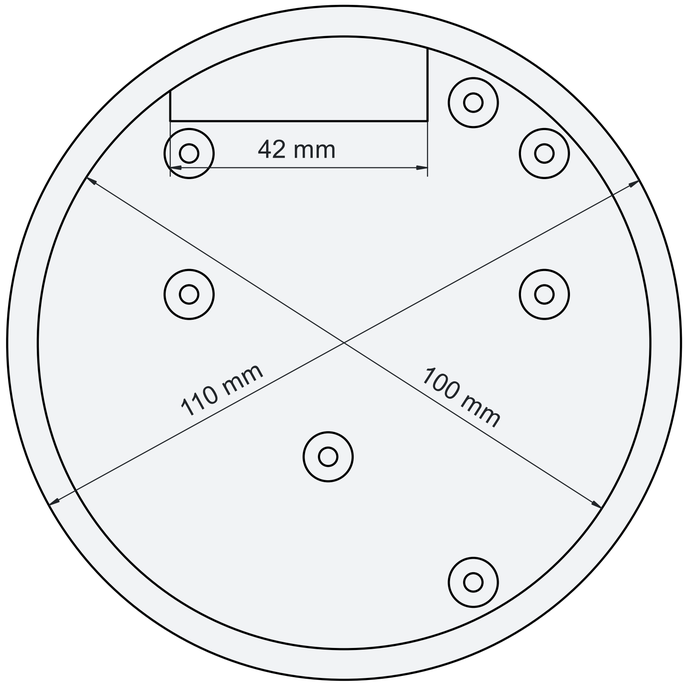

Top View

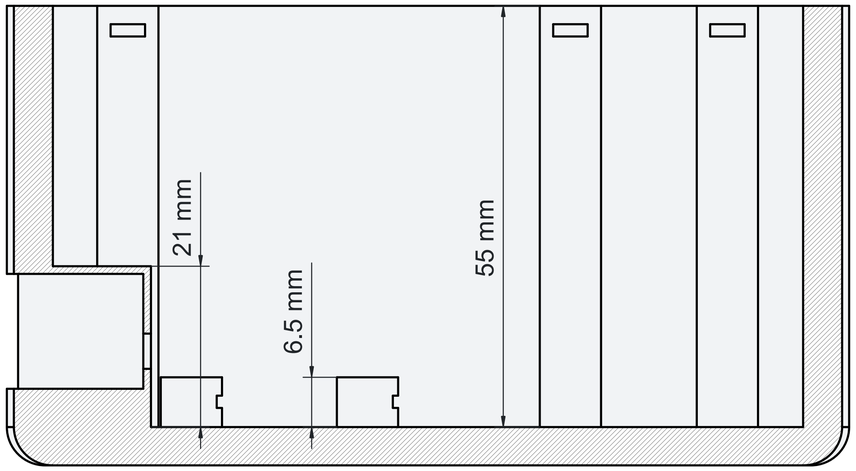

Side Cross Section View

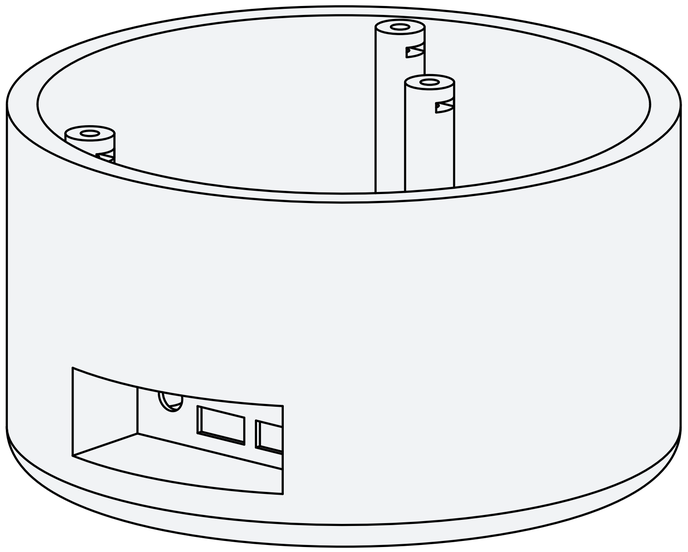

Overall View

Title:	
Base	
Version: 1.0.0	Author: Andrae Banwo