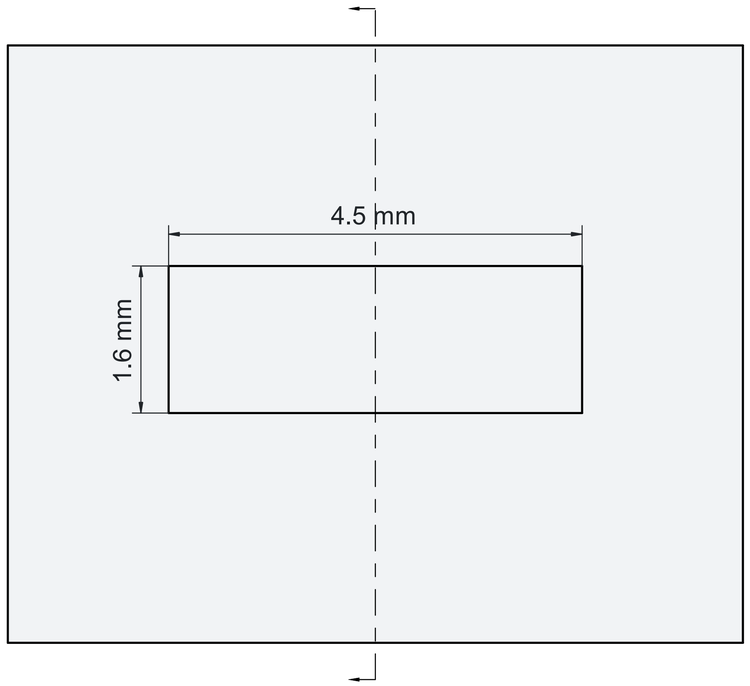

Front View

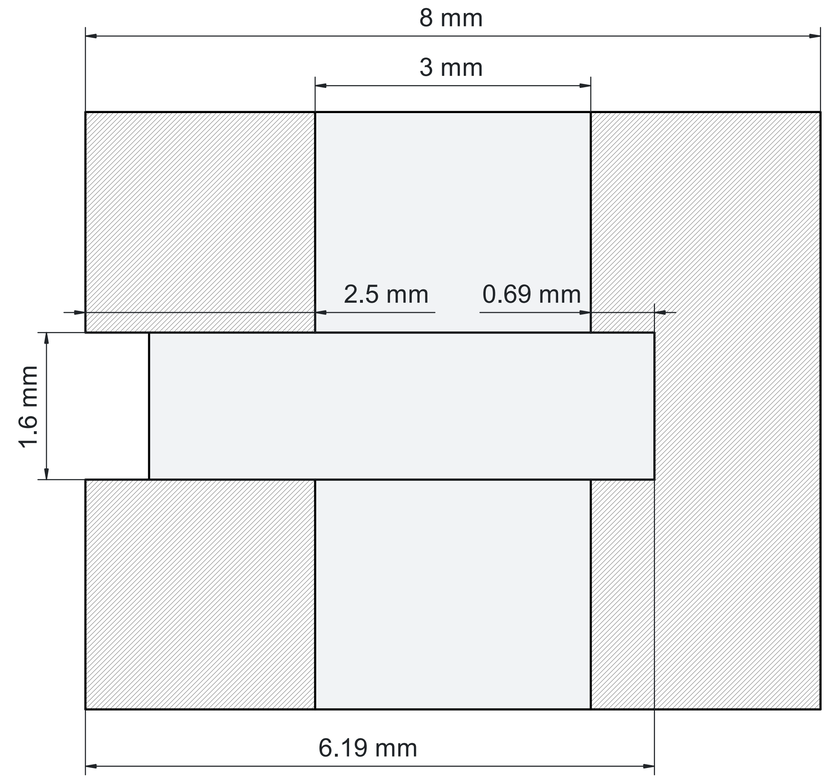

Side Cross Section View

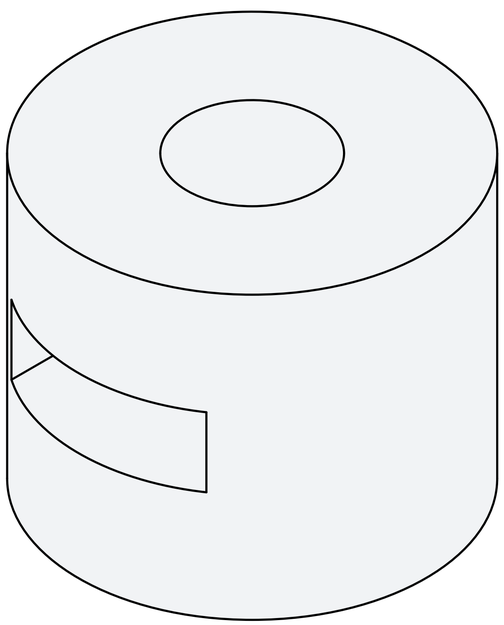

Overall View

Title:	
M2 Nut Slot	
Version: 1.0.0	Author: Andrae Banwo