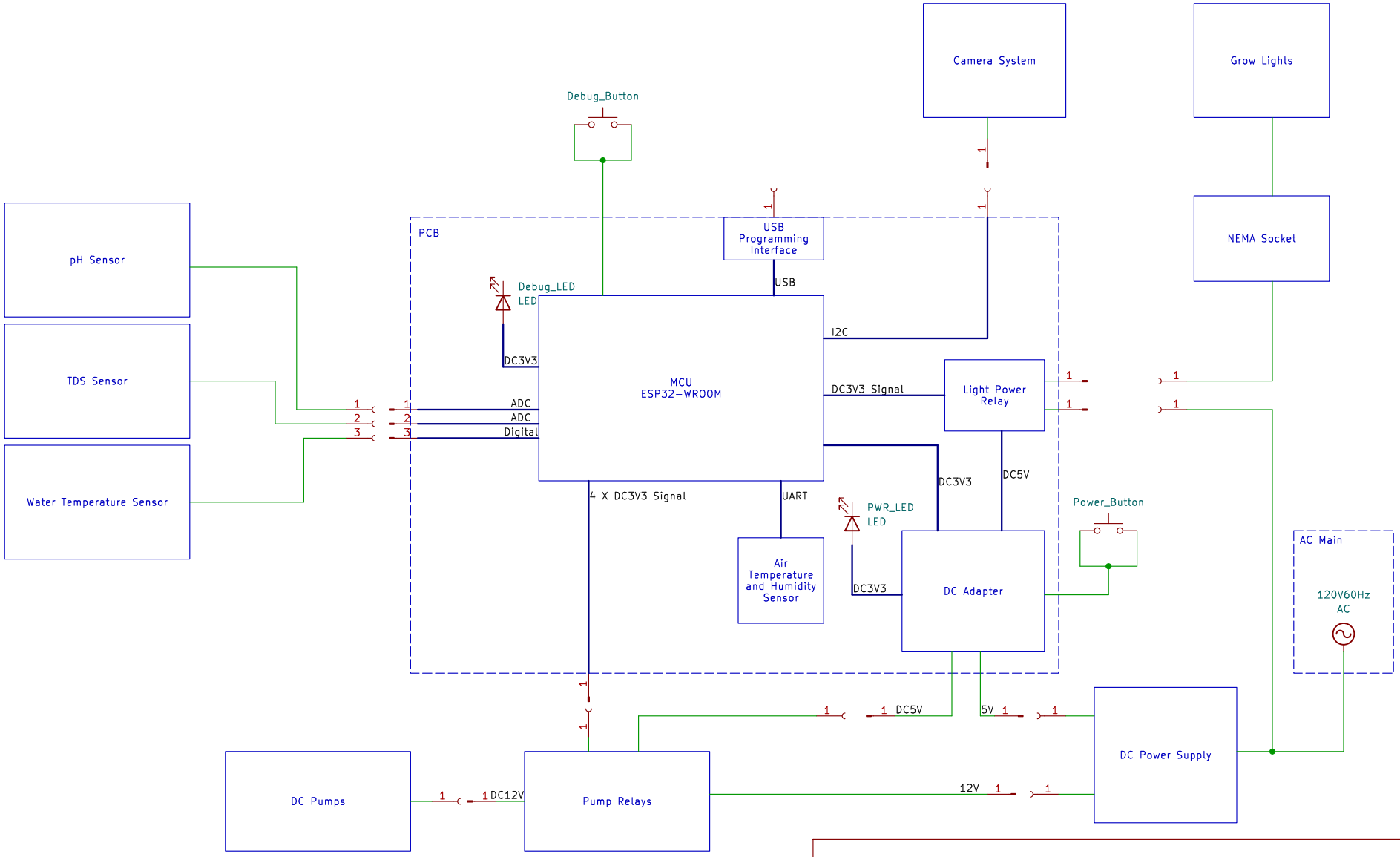

Go to "490 Project PCB" for Detailled Schematic.

COEN/ELEC 490 Team 18

Sheet: /

File: 490 Project.kicad_sch

Title: High Level Hardware Schematic

Size: USLetter	Date: 2023-11-24	**Rev: 5**
KiCad E.D.A. eeschema 7.0.7		Id: 1/1