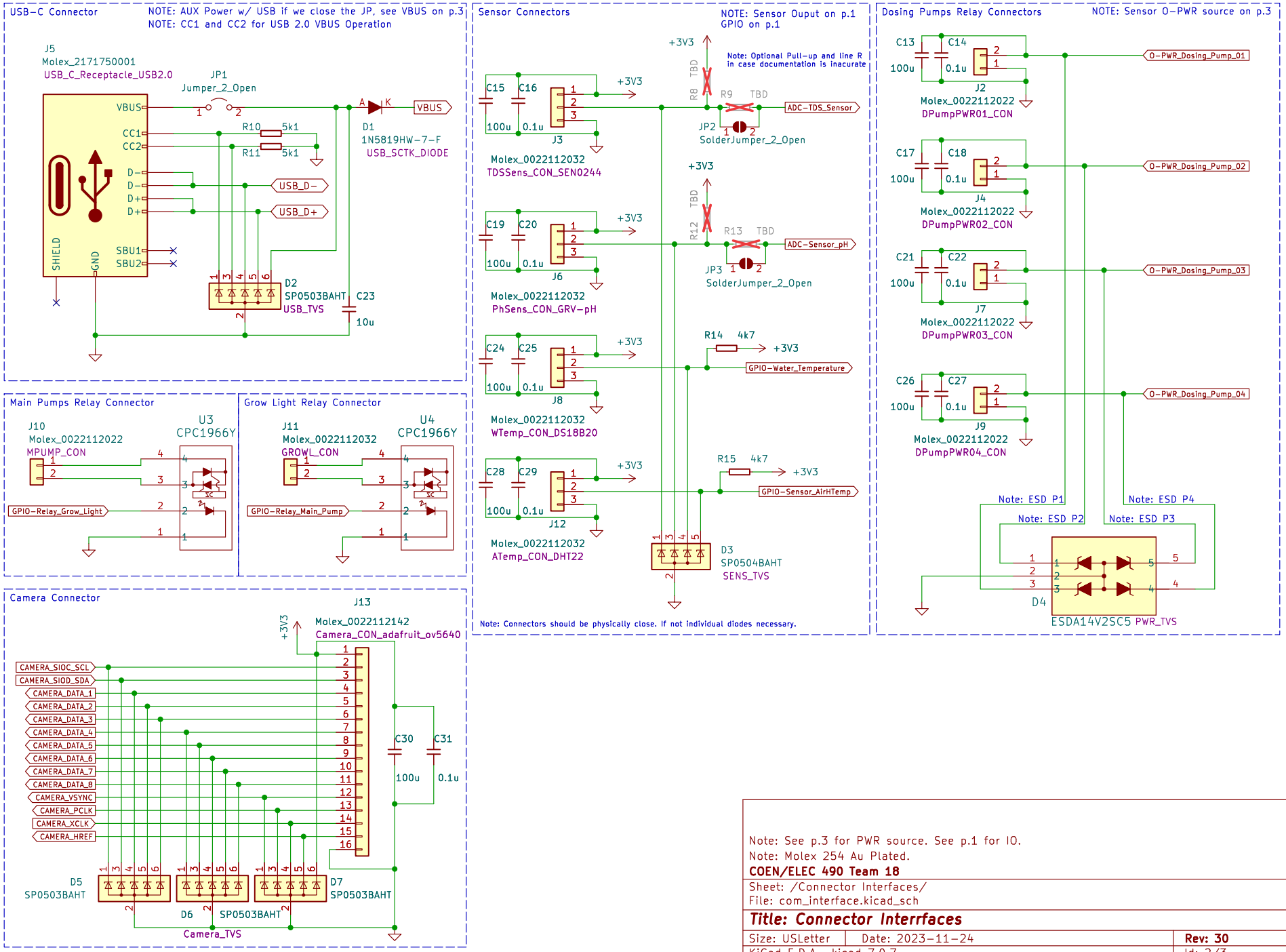

Note: See p.3 for PWR source. See p.1 for IO.
Note: Molex 254 Au Plated.

COEN/ELEC 490 Team 18

Sheet: /Connector Interfaces/
File: com_interface.kicad_sch

Title: Connector Interrfaces

Size: USLetter	Date: 2023-11-24	**Rev: 30**
KiCad E.D.A. kicad 7.0.7		Id: 2/3