ECE Confidential: Cracking the Code

André Knoesen
Electrical and Computer Engineering, UC Davis

March 2026

This work is dedicated to Christian and Olive, may their curiosity forever flourish.

I acknowledge the assistance of large language models, Claude from Anthropic and Gemini from Google, which helped in organizing and editing this document. I also appreciate the valuable human, student perspective feedback provided by Peggy Zhu.

This work is licensed under a
Creative Commons Attribution-NonCommercial 4.0 International License.
Please attribute this work to André Knoesen.

Contents

Preamble **1**

A Mind Worth Questioning: Working with AI in This Course **5**
What an LLM Actually Is . . . 5
The Fundamental Distinction . . . 6
The Right Sequence . . . 6
How to Ask Well . . . 7
How to Verify . . . 8
What the AI Cannot Do for You . . . 8
Documentation: What Is Required . . . 9
The Larger Picture . . . 9
Putting It Into Practice: The Pre-Lab Reflective AI Exercise . . . 10
Chapter Summary . . . 12

1 A Flashlight's Tale **15**
1.1 The Physics Behind the Flashlight . . . 16
1.1.1 Forces: From Gravity to Electricity . . . 16
1.1.2 Fields: Force Without Direct Contact . . . 17
1.1.3 Potential: Electrical Height . . . 18
1.2 When Charges Go for a Stroll: Exploring Electric Current . . . 19
1.3 The Flashlight: Electrical Principles in Action . . . 20
1.3.1 The Circuit Diagram: A First Look . . . 20
1.3.2 The Battery: Chemical Energy to Electrical Energy . . . 21
1.3.3 The Switch: Controlling the Flow . . . 22
1.3.4 The Wires: Pathways for Electrons . . . 22
1.3.5 The Light Source: Energy Conversion . . . 22
1.3.6 Putting It All Together: How a Flashlight Works . . . 23

2 The Language of Circuits **25**
2.1 Schematics as Abstraction . . . 25
2.2 Circuit Schematics: Lines, Symbols, and Connections . . . 25
2.2.1 What is a Circuit Schematic? . . . 26
2.2.2 Standard Circuit Symbols . . . 26
2.2.3 Schematic Drawing Conventions . . . 27
2.2.4 Wire Connections and Junctions . . . 27
2.2.5 Open and Short Circuits . . . 28
2.3 Nodes, Branches, and Loops . . . 28
2.3.1 Key Circuit Elements . . . 28

2.3.2 Why These Terms Matter . . . 29
2.3.3 Practical Example . . . 29
2.3.4 Additional Resources . . . 30
2.4 Current, Voltage, and Ground . . . 30
2.4.1 Current: The Flow of Charge . . . 30
2.4.2 Voltage: The Electrical Pressure . . . 31
2.4.3 Ground: The Reference Point . . . 32
2.4.4 Additional Resources . . . 33
2.5 The Water Analogy . . . 34

3 Unveiling the Secrets of DC Circuits 35
3.1 Kirchhoff's Laws: Currents' Crossroads and Voltage's Roundabout . . . 35
3.1.1 Currents at Node (KCL) . . . 35
3.1.2 Applying KCL . . . 36
3.1.3 Voltage's Voyage: A Loop de Loop (KVL) . . . 38
3.1.4 Applying KVL . . . 39
3.1.5 Additional Resources . . . 43
3.2 Power and Energy in DC Circuits . . . 44
3.2.1 Energy Transfer in Circuits . . . 44
3.2.2 Calculating Power . . . 44
3.2.3 Power in Resistors . . . 44
3.2.4 Power Conservation . . . 45
3.2.5 Energy vs. Power . . . 45
3.3 Series and Parallel Connections . . . 48
3.3.1 Defining Series and Parallel Connections . . . 48
3.3.2 Combinations of Series and Parallel . . . 49
3.3.3 Resistors in Series . . . 49
3.3.4 Resistors in Parallel . . . 50
3.3.5 Series-Parallel Combinations . . . 52
3.3.6 Additional Resources . . . 52
3.4 Voltage Divider . . . 53
3.4.1 Basic Voltage Divider Principle . . . 53
3.4.2 Deriving the Voltage Divider Formula . . . 53
3.4.3 Applications of Voltage Dividers . . . 54
3.4.4 Limitations and Loading Effects . . . 55
3.4.5 Practical Design Considerations . . . 56
3.4.6 Additional Resources . . . 57
3.5 Simplification of Resistor Circuits . . . 58
3.5.1 The Simplification Approach . . . 58
3.5.2 General Strategy for Circuit Analysis . . . 62
3.5.3 Limitations of the Simplification Approach . . . 63
3.6 Measurement Instruments and Practical Considerations . . . 64
3.6.1 Oscilloscopes and Voltmeters . . . 64
3.6.2 Signal Generators . . . 66
3.6.3 Real Batteries . . . 66
3.6.4 Practical Considerations for Circuit Design . . . 68

4 The I-V Menagerie **69**
4.1 Understanding I-V Curves . . . 69
4.2 Ideal Voltage Source . . . 70
4.3 Ideal Current Source . . . 72
4.4 Ideal Resistor . . . 74
4.5 Ideal Diode . . . 76
4.6 Comparing I-V Relationships . . . 78
4.7 Real Components and Non-Ideal Behavior . . . 79

5 Signals in Time **81**
5.1 What Is a Signal? . . . 82
5.2 Analog and Digital Signals . . . 82
5.2.1 Analog Signals . . . 82
5.2.2 Digital Signals . . . 83
5.2.3 The Bridge Between Analog and Digital . . . 84
5.3 The Harmonic Signal . . . 84
5.3.1 The Fundamental Building Block . . . 84
5.3.2 Mathematical Description . . . 84
5.3.3 Amplitude . . . 85
5.3.4 Frequency and Period . . . 86
5.3.5 Phase . . . 86
5.4 Leading and Lagging Sinusoids . . . 87
5.4.1 Phase as Time Shift . . . 87
5.4.2 Which Signal Leads? . . . 87
5.4.3 Why Phase Matters in Circuits . . . 88
5.5 Common Periodic Waveforms . . . 88
5.5.1 Square Wave . . . 89
5.5.2 Sawtooth Wave . . . 89
5.5.3 Triangle Wave . . . 89
5.5.4 Connecting Waveform Shape to Frequency Content . . . 89
5.6 Sampling and the Nyquist Criterion . . . 91
5.6.1 From Continuous to Discrete: What Sampling Means . . . 91
5.6.2 The Nyquist Sampling Criterion . . . 91
5.6.3 Aliasing: When Sampling Goes Wrong . . . 92
5.6.4 Anti-Aliasing Filters . . . 94
5.6.5 Practical Sampling Rates . . . 94
5.6.6 Quantization . . . 94

6 Signals in Frequency **97**
6.1 Two Ways to See a Signal . . . 97
6.2 Spectrum of a Harmonic Signal . . . 98
6.3 Fourier Series . . . 99
6.3.1 Building Periodic Signals from Harmonics . . . 99
6.3.2 The Fourier Series Formula . . . 100
6.3.3 Spectra of Common Waveforms . . . 101
6.4 Spectrum of Aperiodic Signals . . . 101
6.4.1 Continuous Spectra . . . 102
6.4.2 The Fourier Transform . . . 103

6.5 Linearity and Why Harmonics Unlock System Analysis 103
6.5.1 Superposition and Harmonic Analysis 104
6.5.2 Linear and Nonlinear Elements 104
6.5.3 Looking Ahead: AC Analysis 105
6.6 Frequency Ranges and Applications 105

7 Circuits that Remember 109
7.1 Step Functions: Modeling Switches in Circuits 110
7.2 Ideal Inductor: The Magnetic Energy Storage Element 111
7.2.1 How Inductors Work: The Magnetic Connection 111
7.2.2 Inductance: Measuring an Inductor's Strength 113
7.2.3 The Fundamental Property of Inductors 113
7.2.4 Inductors in Series and Parallel 113
7.3 What Happens When We Suddenly Apply Voltage to an Inductor? 114
7.3.1 The Key Property: Inductors Resist Changes in Current 115
7.3.2 Physical Explanation: Why Inductors Resist Current Changes 115
7.3.3 Helpful Analogies to Understand Inductor Behavior 115
7.3.4 Analyzing an RL Circuit Step Response 115
7.3.5 The Time Constant: How Fast Does Current Build Up? 116
7.3.6 What Happens When the Switch Closes? 116
7.3.7 Understanding Lenz's Law: The Science Behind an Inductor's Behavior 117
7.3.8 The Mathematical Equations 118
7.3.9 Energy Storage in the Inductor 118
7.3.10 What Happens When the Switch Opens? 119
7.3.11 Inductor Behavior in DC Steady State 119
7.3.12 Summary of Inductor Step Response 119
7.4 Ideal Capacitor: The Electric Energy Storage Element 119
7.4.1 How Capacitors Work: Storing Electric Charge 120
7.4.2 Capacitance: Measuring a Capacitor's Charge-Storing Ability 120
7.4.3 The Fundamental Property of Capacitors 121
7.4.4 Helpful Analogies to Understand Capacitor Behavior 121
7.4.5 Capacitors in Series and Parallel 121
7.5 What Happens When We Suddenly Apply Voltage to a Capacitor? 123
7.5.1 The Key Property: Capacitors Resist Changes in Voltage 123
7.5.2 Analyzing an RC Circuit Step Response 123
7.5.3 The Time Constant: How Fast Does Voltage Build Up? 123
7.5.4 What Happens When the Switch Closes? 124
7.5.5 Physical Explanation: Why Capacitors Behave This Way 124
7.5.6 The Mathematical Equations 125
7.5.7 Energy Storage in the Capacitor 125
7.5.8 What Happens When the Switch Opens? 125
7.5.9 Capacitor Behavior in DC Steady State 126
7.5.10 Displacement Current: Maxwell's Insight 126
7.5.11 Summary of Capacitor Step Response 126
Chapter Summary 127

8 The Imaginary Made Useful **129**
8.1 Complex Numbers . . . 130
8.1.1 Complex Conjugate . . . 132
8.2 Algebraic Operations with Complex Numbers . . . 132
8.2.1 Addition and Subtraction . . . 132
8.2.2 Multiplication . . . 132
8.2.3 Division . . . 133
8.3 Phasors: A Compact Representation for AC Signals . . . 134
8.3.1 Visualizing Phasors . . . 136
8.3.2 Working with Phasors in Practice . . . 137
8.4 Derivatives of Time-harmonic Signals . . . 138
8.5 Time Averages of Time-harmonic Signals . . . 139
Chapter Summary . . . 141

9 Impedance and Filters **143**
9.1 Impedance: Ohm's Law for AC Circuits . . . 144
9.2 Frequency Dependence of Impedance . . . 145
9.2.1 Capacitive Reactance . . . 145
9.2.2 Inductive Reactance . . . 146
9.3 Series and Parallel Impedances . . . 148
9.3.1 Series Connections . . . 148
9.3.2 Parallel Connections . . . 149
9.4 Impedance Voltage Divider . . . 150
9.5 The Decibel Scale and Bode Plots . . . 151
9.5.1 The Decibel . . . 151
9.5.2 Bode Plots . . . 152
9.6 Passive Filters . . . 152
9.6.1 Filter Types . . . 153
9.6.2 Transfer Functions . . . 154
9.6.3 Low-Pass RC Filter . . . 154
9.6.4 High-Pass RC Filter . . . 155
9.6.5 RL Filters . . . 156
9.7 RLC Circuits: Resonance . . . 158
9.7.1 Series RLC Circuit . . . 158
9.7.2 The Resonant Frequency . . . 158
9.7.3 Parallel RLC Circuit . . . 159
9.7.4 Bandpass Filter . . . 159
Chapter Summary . . . 161

10 Op-Amps **163**
10.1 Basic Op-amp: The Power of Abstraction . . . 163
10.2 Ideal Operational Amplifier: A Perfect Abstract Model . . . 166
10.2.1 Characteristics of the Ideal Op-Amp . . . 169
10.3 Feedback: The Key to Control . . . 170
10.3.1 Understanding Feedback Systems . . . 170
10.3.2 Negative Feedback in Op-Amp Circuits . . . 171
10.3.3 Golden Rules for Op-Amps with Negative Feedback . . . 172
10.4 Negative Feedback Op-Amp Circuits . . . 172

10.4.1 Inverting Amplifier 173
10.4.2 The Summing Amplifier 176
10.4.3 Noninverting Amplifier 177
10.4.4 Voltage Follower: The Perfect Buffer 181
Chapter Summary 184
10.5 Where to Learn More 186

11 The Signal in the Difference 187
11.1 The Difference Amplifier 187
11.2 The Wheatstone Bridge 189
11.3 The Wheatstone Bridge 191
11.4 The Instrumentation Amplifier 193
11.5 Optimizing the Signal Chain 196
Chapter Summary 199

Preamble

Podcast: Overview of ECE Confidential: Cracking the Code

Welcome to ECE Confidential: Cracking the Code Electrical engineering has a reputation for throwing equations at you before explaining why they matter. That's not how this book works. Here, we start with something you've held in your hand and build from there. Every concept earns its place by connecting to something real. By the end, you'll have the tools to analyze, design, and build the systems that define modern technology. More importantly, you'll understand *why* each tool exists.

Here's how the journey unfolds.

Chapter 1 starts with a flashlight. Not because it's simple, but because it contains everything: voltage, current, resistance, a source, a load, and a complete circuit. Understanding what's actually happening inside that flashlight gives you the physical intuition that every chapter after this one depends on.

Chapter 2 introduces the schematic, the language engineers use to represent circuits. Once you know what a flashlight circuit *does*, we can show you how engineers *draw* it. Schematics are abstractions, but grounded ones, and reading them fluently is a skill you'll use every day as an engineer.

Chapter 3 asks: what if that voltage isn't constant? Welcome to signals in the time domain. You'll learn how analog and digital signals differ, how we characterize them, and how periodic signals carry information, all framed around what you already understand about voltage.

Chapter 4 looks at the same signals through a different lens: the frequency domain. The same signal you analyzed in time can be described by its frequency content, and that shift in perspective turns out to be one of the most powerful tools in electrical engineering.

Chapter 5 dives into DC circuits with resistors. You'll work with Kirchhoff's Laws, voltage dividers, and learn how components behave when connected in different configurations.

Chapter 6 introduces semiconductors and diodes, from basic rectifiers to LEDs, with a look at how solar cells work.

Chapter 7 moves beyond steady-state analysis to explore how inductors and capacitors respond over time.

Chapter 8 builds the mathematical toolkit for AC circuits. Complex numbers and phasors turn out to make your life easier rather than harder, and this chapter shows you why.

Chapter 9 introduces impedance, which extends everything you know about resistance into the AC world, covering filters, resonance, and how frequency changes circuit behavior.

Chapter 10 closes with op-amps, the versatile building blocks that show up across virtually every area of modern electronics.

How to Use This Book and Course

This course gives you three ways to build understanding, and they work best together. The

reader provides the conceptual foundation for each lecture, so come to class having done the reading. You will get much more out of a lecture when the ideas are already familiar and you are ready to ask questions rather than just take notes. The lab is where theory meets reality. You will build and measure actual circuits, and that hands-on experience has a way of making abstract concepts click in ways that reading alone cannot. Take the lab seriously, because connecting what you see on paper to what you observe on a bench is one of the most important skills you will develop in this course. AI is a legitimate and useful learning tool, and you are encouraged to use it. It can explain a concept from a different angle, help you work through a problem, or push your thinking further than the material covers. Use it as a learning partner rather than a shortcut, because at the end of the course you will complete a project where you are expected to demonstrate and explain your understanding directly, and a closed-book written exam that will assess your grasp of the core concepts covered throughout the semester. The students who succeed are the ones who use all three resources with one goal in mind: genuine understanding of the fundamentals.

Throughout the text, you'll find podcast links that provide audio discussions of the indicated sections. These podcasts were AI-generated using NotebookLM. Please note that while these recordings offer supplementary content, listeners should verify the accuracy of information presented, as AI-generated content may contain errors or inaccuracies.

(

A Mind Worth Questioning: Working with AI in This Course

Every generation of engineers has had to learn how to use the most powerful thinking tools available to them. Slide rules gave way to calculators, which gave way to simulation software, which gave way to the internet. Each transition required engineers to develop a new skill: not merely operating the tool, but understanding what the tool was actually doing, where it could be trusted, and where it could not.

You are entering engineering at a moment when the newest such tool is the large language model (LLM), the technology behind AI assistants such as ChatGPT, Claude, and Gemini. This course treats proficiency with these tools as a genuine learning objective, not an afterthought. By the time you complete ECE Emerge, you will not only understand foundational electronics; you will also understand how to use AI as a productive thinking partner rather than a shortcut that quietly undermines your own development.

This chapter tells you exactly how to do that.

What an LLM Actually Is

Before you can use a tool wisely, you need a working mental model of what it does. An LLM is not a search engine that retrieves facts, and it is not a calculator that computes correct answers. It is a system trained to predict the most plausible continuation of any text it is given. That training was performed on an enormous corpus of human writing, which means the model has absorbed a remarkable breadth of knowledge about how concepts are explained, how arguments are structured, and how problems are solved across virtually every technical field.

This gives LLMs a genuinely useful property: they are extraordinarily good at explanation. If you want a concept explained six different ways until one of them clicks, an LLM will do that patiently and without judgment. If you want to work through a problem step by step and have someone check your reasoning at each stage, an LLM can do that too.

It also gives them a dangerous property: they are confident even when wrong. An LLM produces fluent, authoritative-sounding text regardless of whether the underlying content is correct. It can give you the wrong formula for a filter cutoff frequency in the same measured, helpful tone it uses to give you the right one. It cannot feel uncertainty the way a knowledgeable person does, and it will not always flag its own errors.

The practical implication is this: an LLM is a powerful aid to understanding, and a poor substitute for it. Use it to help you think; do not use it to think for you.

The Fundamental Distinction

Every time you open an AI assistant in this course, you face a choice, usually without realizing it. You can use the tool to build your understanding, or you can use it to bypass the effort that builds understanding. These two paths are not equally useful. They are not even in the same category. A practical test for which path you took is described in the section on verification below.

This matters in ways that will become visible sooner than you might expect. The prelab for Lab 4 depends on understanding the time constant from Chapter 7. The analysis in Lab 5 depends on the voltage divider from Chapter 3. The capstone project requires you to reason through every stage of a signal chain under real-world constraints. Each of these moments will reveal exactly what you actually understand, independent of what any AI told you to write.

The goal is not to avoid AI. The goal is to use it in ways that leave you more capable, not less.

The Right Sequence

The most important practice in this course is also the simplest to state and the most tempting to skip: attempt the problem before you ask the AI.

This is not a rule designed to make things harder. It is how learning works. The struggle of working on a problem, even partially and incorrectly, prepares your mind to receive an explanation in a way that going straight to the explanation does not. A concept explained before you have wrestled with the problem slides off. The same concept explained after you have identified exactly where your reasoning broke down tends to stick permanently.

The sequence should always be:

1. Read the relevant section of the textbook.
2. Attempt the problem or work through the concept on your own.
3. Identify specifically where you are stuck or uncertain.
4. Bring that specific question to the AI.

Step three is the most important and the most frequently skipped. “I do not understand Chapter 9” is not a question an AI can help with productively. “I understand that impedance combines resistance and reactance, but I do not see why the reactance of a capacitor decreases at high frequency when the formula $X_C = 1/\omega C$ makes it look like frequency is in the denominator” is a question the AI can engage with precisely. The specificity of your question reflects the quality of your prior engagement with the material.

How to Ask Well

The quality of an AI conversation depends almost entirely on how you frame your questions. The following practices will make your conversations substantially more useful.

Ask for explanation, not answers

The least useful thing you can do is ask the AI to solve a problem you have not yet attempted. The most useful thing is to describe your own reasoning and ask whether it is correct.

Less useful: "What is the output voltage of this voltage divider?"
More useful: "I calculated 2.2 V for this voltage divider using $V_{out} = V_s \cdot R_2/(R_1 + R_2)$. My reasoning was that the bottom resistor sees the full supply voltage across the series combination. Is that reasoning correct, and if not, where does it go wrong?"

Ask for the "why," not just the "what"

An AI will give you a definition of impedance if you ask for one. That definition is also in the textbook. What the textbook cannot do interactively is respond to your specific confusion about why the definition takes the form it does. Ask for that instead.

Less useful: "What is impedance?"
More useful: "I understand that impedance generalizes resistance to AC circuits. What I do not understand is why we can use all the same series and parallel combination rules with impedances that we used with resistances in Chapter 3. What makes that valid?"

Ask it to use the course's framework

This textbook builds understanding through specific analogies and specific conceptual sequences. The gravity and hill analogy for electric potential. The voltage divider as the foundation for filters. The Golden Rules as consequences of feedback, not memorized facts. You can instruct the AI to stay within these frameworks rather than introducing new ones that may be correct in general but confusing in context.

For example: "Can you explain why a capacitor blocks DC and passes AC, using the idea that impedance is frequency-dependent and using the same voltage divider reasoning from Chapter 3?" This grounds the explanation in what you already know rather than importing a new framework from outside the course.

Ask it to quiz you

After studying a topic, ask the AI to question you on it rather than summarize it for you. This is called retrieval practice, and it is among the most well-supported techniques in learning science. Tell the AI what you have just studied, ask it to pose a conceptual question, answer in your own words, and ask it to identify what is missing or incorrect. This converts the AI from a source of information into a training partner. The pre-lab self-test each week formalizes this practice.

Ask it to steelman your confusion

If something in the course seems wrong to you, or if a result surprises you, describe your confusion precisely and ask the AI to explain why your intuition led you astray. "I expected

the output of the voltage follower to be different from the input because the op-amp has such high gain. It seems like something should be happening to the signal. What is wrong with my reasoning?" This kind of question teaches you more than asking for the correct explanation from scratch.

How to Verify

Verification is not optional. It is part of every AI interaction.

An LLM can give you a formula, a component value, a circuit configuration, or a step-by-step derivation that is subtly or completely wrong. It will not preface that information with a warning. It will present it with the same helpful tone as everything else it says. In an engineering context, an unverified result that happens to be wrong is worse than no result at all, because it gives you false confidence at exactly the moment you need to be most careful.

After any AI conversation that produced a technical claim, verify it against at least one of the following:

- The textbook (the authoritative source for this course)
- Your own independent calculation
- A lab measurement
- A course instructor or teaching assistant

A practical technique: after an AI explains something to you, close the conversation, write down what you understood in your own words, and check that summary against the relevant section of this textbook. The gaps between what you wrote and what the textbook says identify exactly what you still need to work on.

When an AI gives you a numerical answer to a circuit problem, work through the problem independently and compare. If the answers agree and you understand both, proceed. If they disagree, do not simply assume the AI is correct. Find the discrepancy before you move on.

What the AI Cannot Do for You

Several things matter in this course that no AI conversation can provide.

Physical intuition comes from measurement. When you watch the output of a low-pass filter roll off on the oscilloscope as you sweep the frequency upward, something is built in your mind that reading about cutoff frequencies cannot build. When your measured time constant matches your calculated one to within five percent, and then does not when you have a component in backwards, you are developing the calibrated judgment that distinguishes a practicing engineer from someone who has read about engineering. No amount of AI conversation substitutes for this.

The prelab is not a deliverable to be completed; it is preparation for the lab. The purpose of the prelab is to send you into the lab with predictions in hand. If you arrive at the lab without having genuinely worked through the prelab yourself, you will not know what to look for, you will not notice when something unexpected happens, and you will not be able to explain discrepancies when they arise. Using an AI to complete prelab calculations means you have satisfied the submission requirement while defeating the purpose entirely.

The AI has never seen your breadboard. When your measured output does not match your theoretical prediction, the AI can help you think through the space of possible causes systematically. It cannot tell you that your capacitor leads are reversed, that you have a loose wire at a node, or that your resistor color-code reading was off by a factor of ten. Physical debugging requires physical inspection.

The AI does not know this course. It was not trained on this textbook. It may explain a concept using terminology this course specifically avoids, or it may introduce ideas from a framework the course has not yet built toward. When an AI explanation conflicts with something in this textbook, resolve the conflict by examining both carefully and consulting the textbook as the authoritative source.

Documentation: What Is Required

This course requires you to document and attribute AI contributions in your submitted work. This is not bureaucratic overhead. It is a professional norm that is becoming standard across engineering practice, and forming the habit now matters.

The standard is that a reader of your report should be able to tell exactly what you did and what the AI did. In practice, this means the following.

If an AI conversation helped you understand a concept that you then applied in your own work, note it briefly: "I used [AI tool] to clarify my understanding of the time constant derivation before completing this calculation."

If you asked an AI to review your reasoning and it identified an error that you then corrected, note that: "I used [AI tool] to review my phasor calculation. It identified an error in my sign convention for the phase angle, which I corrected by re-reading Sections 5.3.5 and 8.3."

If any text, code, numerical result, or figure generated by an AI appears directly in your submitted work, cite it explicitly, just as you would cite any other source.

The practical test is this: if you cannot write clearly about what the AI contributed and what you contributed, the boundary became unclear during the work itself. That is the moment to pause and re-engage with the material on your own terms before continuing.

The Larger Picture

Every interaction you have with an AI in this course is practice. An interaction in which you handed off your thinking to the machine is practice at becoming less capable. An interaction in which you brought your own reasoning to the table, challenged it, refined it, and left understanding something you did not before; that is practice at something that compounds.

The material in this course is genuinely interesting. Circuits are a language for describing how energy and information move through the physical world. Signals carry meaning. Amplifiers and filters shape that meaning. The instrumentation amplifier at the heart of your capstone project is a precision instrument for extracting a faint physical signal from a noisy background — which is, in a certain sense, what good thinking is as well.

The AI is a capable conversation partner for exploring all of this. Bring your questions to it. Challenge it. Verify what it tells you. The course will be richer for it, and so will you.

Putting It Into Practice: The Pre-Lab Reflective AI Exercise

Each lab in this course includes a structured Reflective AI Exercise as part of the pre-lab assignment. The format is identical each lab and has three parts.

Part 1: Exploration. Use an AI assistant to explore two designated focus areas for the current lab. The goal is not to collect a summary you can paste into your report. The goal is to arrive at the lab with a mental model that lets you make and check predictions.

Part 2: The Self-Test. Write and refine your own quiz prompt targeting the specific concepts for that lab, then run the quiz. The details of how to do this well are covered in the following section on prompt quality.

Part 3: The Formal Reflection. Submit a 150–250 word written synthesis addressing three required points specific to each lab. This is submitted to Gradescope as part of the pre-lab assignment, due Tuesday at noon.

Prompt Quality: A Skill You Will Practice Every Week

The quality of what you get from an AI depends almost entirely on the quality of what you ask. This is not a minor detail. It is the skill. A vague prompt produces a generic response that teaches you nothing. A well-constructed prompt produces a focused, concept-specific conversation that actually builds your understanding.

Step 1: Asking for Information (Part 1 Exploration)

The first use of a prompt in each lab is to explore the designated focus areas. The same contrast between weak and strong applies here as anywhere else.

Weak: "Tell me about RC circuits."

This produces a textbook summary. It teaches you what you could have read. It does not engage your existing understanding or identify where it breaks down.

Strong:

> *"I am a first-year electrical engineering student preparing for a lab on RC circuits. I understand that a capacitor stores charge, but I do not yet understand why the voltage across it cannot change instantly when a switch closes. Can you explain the physical reason for that constraint, without using differential equations? Focus on what the capacitor is actually doing with energy at the moment the switch closes."*

This prompt works because it establishes who you are and what you are preparing for, it names what you already understand, it identifies specifically where your understanding stops, and it constrains the form of the answer so the explanation stays at the right level. The AI now has a precise target. The resulting explanation will fill a real gap rather than restate what you already know.

Step 2: Writing Your Own Quiz Prompt (Part 2 Self-Test)

After exploring the focus areas, you write your own quiz prompt to test what you have learned. This prompt must do four things:

1. Establish who you are and what you are preparing for
2. Constrain the question type to scenario-based prediction, not simple recall
3. Name the specific concepts the questions must involve
4. Control when answers are revealed

Weak: "Quiz me on circuits."

This fails on every dimension: no role context, no constraint on question type, no scope, and no output control.

Strong:

> *"I am a first-year electrical engineering student preparing for a lab on RC circuits. Give me a three-question scenario-based quiz. Each question must describe a specific physical situation (a component value, a switching event, or a waveform observation) and ask me to predict what happens and explain why in physical terms. Do not ask me to recall definitions or reproduce formulas from memory. Do not reveal any answers until I have responded to all three questions."*

Step 3: The Meta-Prompt (Improving Your Draft)

Once you have written your quiz prompt draft, submit it to the AI using the following meta-prompt before running the quiz. This is the same every week; copy it exactly and paste your draft where indicated:

> *"Here is a prompt I wrote to generate a self-quiz to help me prepare for an engineering lab. Please evaluate it against these four criteria: (1) does it establish my role and context clearly, (2) does it constrain the question type to scenario-based rather than simple recall, (3) does it prevent the AI from revealing answers before I have responded, (4) does it scope the content precisely enough to be useful for a specific lab topic. Then rewrite it to address any weaknesses you identify."*
>
> *My draft prompt: [paste your draft here]*

Use the AI's critique and revised version to produce your final prompt, then run the quiz with that revised version.

What You Submit for Part 2

Your Gradescope submission for Part 2 must include all four of the following:

1. Your original draft prompt
2. The AI's critique (copy-paste in full)
3. Your revised prompt after incorporating the feedback
4. The quiz transcript: your revised prompt, the AI's questions, and your responses

Items 1 through 3 are the prompt-craft artifact. Item 4 is the content record.

What a Strong Reflection Looks Like (Part 3)

The three required points in Part 3 are not three separate paragraphs. They are three jobs that a single coherent paragraph must do simultaneously. The annotated example below uses a made-up lab scenario to show which sentence is doing which job.

Example reflection (annotated):

> The wiring path between a sensor and a measurement instrument acts as an antenna for environmental interference, so the choice of connection method determines how much of that noise reaches the instrument alongside the signal. **[The Link: wiring choice is framed as signal protection, not just a connection option.]** Differential wiring suppresses this noise through common-mode rejection: because both wires travel the same physical path, any interference that appears equally on both conductors is subtracted out at the instrument, while the true differential signal (which appears on only one wire) is preserved. **[The Technical "Why": the key term is used to explain a mechanism, not just named.]** My specific realization was that using a single-ended connection at a bench cluttered with switching power supplies would feed that switching noise directly into the measurement chain; I now know to look for a periodically spiking noise floor as the diagnostic symptom of that mistake, and to switch to differential wiring as the first corrective step. **[The Lab Application: a concrete, physically plausible mistake is identified, a symptom is named, and a correction is stated.]**

Notice that the reflection does not list the three criteria and fill them in one by one. It builds a single argument in which each sentence advances the next. The annotations above are shown here for instructional purposes only; your submitted reflection should read as continuous prose.

Summary

- An LLM is trained to produce plausible, fluent text. It is exceptionally good at explanation and exceptionally unreliable as an authority. It does not flag its own errors.
- The fundamental test of a productive AI conversation: could you explain the result in your own words afterward? If not, the AI did your thinking, not you.
- Always attempt the problem before asking the AI. The struggle of working on a problem prepares your mind to receive an explanation. Skipping the struggle discards most of the learning value.
- Ask for explanation of your reasoning, not production of an answer. Ask for the "why," not just the "what." Ask it to quiz you.
- Verify every technical claim against the textbook, an independent calculation, or a measurement before acting on it.
- Physical intuition, prelab preparation, and circuit debugging require your direct engagement. No AI conversation substitutes for them.
- Document AI contributions in your work as you would any other source. The standard: a reader should be able to tell exactly what you did and what the AI did.

Table 1: AI Use: Quick Reference

Situation	**Recommended Approach**
You do not understand a concept	Attempt to articulate specifically what you do not understand; bring that specific gap to the AI
You want to check your work	Show the AI your reasoning, not just your answer; ask it to identify where the reasoning breaks down
You want to prepare for a lab	Ask the AI to quiz you on the relevant concepts after you have studied them
The AI gives you a numerical result	Verify it against the textbook or your own independent calculation before using it
The AI conflicts with the textbook	Examine both; treat the textbook as the authoritative source for this course
You are stuck on a physical circuit	Use the AI to generate a list of possible causes to investigate; do the investigation yourself
You are writing a report	Document what the AI contributed and what you contributed; the boundary should be clear
You are tempted to ask the AI for the answer	Close the window; attempt the problem; identify specifically where you get stuck; then return

Chapter 1

A Flashlight's Tale

This chapter introduces fundamental concepts in electrical and computer engineering through the familiar example of a flashlight. By exploring charge, forces, fields, and electrical potential, you'll gain insights into how basic circuits work, setting a foundation for more advanced topics in the course.

Learning Objectives:

- Understand the concept of electrical charge and its role in circuits
- Use the gravitational analogy to explain electric force, field, and voltage
- Explain how batteries, switches, and light sources function in a circuit
- Describe the relationship between electric fields and current flow

Have you ever flipped a switch and wondered how a flashlight instantly produces light? This simple device demonstrates key principles that engineers use to design everything from smartphones to electric vehicles. When you turn on a flashlight, the battery supplies energy that moves through the circuit to produce light. But how exactly does this happen?

The answer lies in the movement of *electrical charge* through the wires. This invisible flow of charge is fundamental to all electrical devices. Let's explore what charge is and how it creates the light in your flashlight.

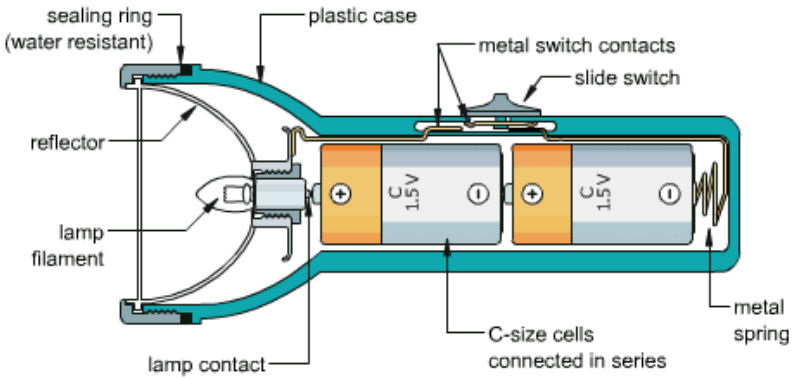

Figure 1.1: Flashlight. Source

Understanding electrical charge is essential for examining the components of a flashlight, representing them in a schematic diagram, and analyzing the circuit in terms of voltage, current, and power. Let's take a closer look at what electric charge is and its underlying effects.

First, we will explore stationary charge, and then we will examine what occurs when charges move. A moving electric charge generates an electrical current.

1.1 The Physics Behind the Flashlight

Before we can explain what happens when you turn on a flashlight, we need to understand the invisible forces that make it work. The good news is that you already have the right intuition. You just need to see it in a new context.

1.1.1 Forces: From Gravity to Electricity

You already know about gravity. Drop an object and it falls. The Earth pulls it downward with a force that depends on how massive the two objects are and how far apart they are. Newton's Law of Gravitation describes this:

$$\vec{\mathbf{F}}_g = -G\frac{mM}{r^2}\hat{\mathbf{r}} \tag{1.1}$$

where m and M are the two masses, r is the distance between them, and $G = 6.674 \times 10^{-11}$ N·m^2/kg^2 is the gravitational constant. The negative sign means the force is always attractive: masses pull toward each other.

The electrical force works the same way, with one important difference. Instead of mass, the source of the force is *electric charge*, measured in Coulombs (C). Electrical charge is fundamental to the functioning of electrical circuits. In the International System of Units (SI), charge is measured in units called Coulombs, abbreviated as "C." The constant $+1.6 \times 10^{-19}$ C is known as the elementary charge, representing the smallest possible value of electric charge. The charge of any object must be greater than or equal to the elementary charge and is always an integer multiple of it. An electron has a charge of -1.6×10^{-19} C, while a proton has a charge of $+1.6 \times 10^{-19}$ C.

The smallest unit of charge in nature is the charge carried by a single electron: -1.6×10^{-19} C. Coulomb's Law describes the electrical force between two charges:

$$\vec{\mathbf{F}}_e = k_e\frac{qQ}{r^2}\hat{\mathbf{r}} \tag{1.2}$$

where q and Q are the two charges, r is the distance between them, and $k_e = 8.99 \times 10^9$ N·m^2/C^2 is Coulomb's constant. The mathematics is nearly identical to gravity. The key difference is that while gravity is always attractive, electrical forces can either attract or repel. Like charges repel each other. Opposite charges attract.

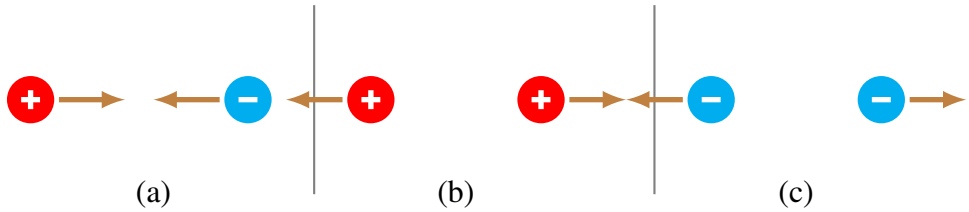

Figure 1.2: Electrical forces between charges: (a) opposite charges attract; (b) two positive charges repel; (c) two negative charges repel.

This force between charges is what ultimately drives every electrical device you will ever study, including the flashlight.

1.1.2 Fields: Force Without Direct Contact

Both gravity and electricity act over a distance. You do not need to touch an object for gravity to pull it down, and you do not need charges to be touching for the electrical force to act between them. Physicists use the concept of a *field* to describe this: a region of space where a force would be experienced by an object placed there.

Think about standing on a hillside. The hill has a steepness at every point, and that steepness tells you exactly how hard gravity would push you if you were standing there. That is a gravitational field. It exists whether or not you are on it.

$$\vec{\mathbf{g}} = -G\frac{M}{r^2}\hat{\mathbf{r}} \tag{1.3}$$

The gravitational field at any point tells you the force per unit mass that any object placed there would experience.

The electric field works the same way. A charge Q creates an electric field around it. Place another charge anywhere in that field and it will experience a force:

$$\vec{\mathbf{E}} = k_e\frac{Q}{r^2}\hat{\mathbf{r}} \tag{1.4}$$

The electric field at any point tells you the force per unit charge that any charge placed there would experience. Field lines point away from positive charges and toward negative charges, as shown in Figure 1.3.

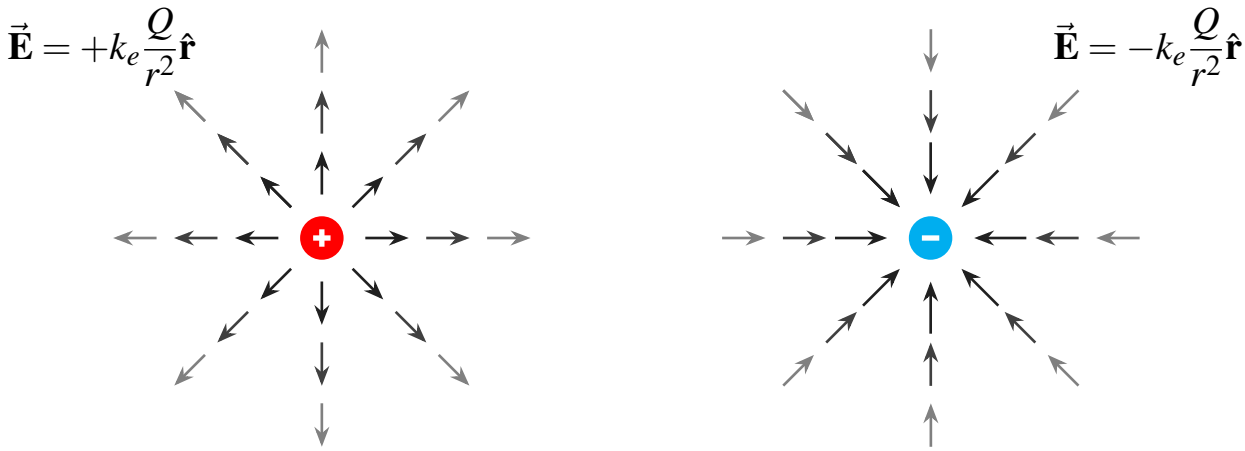

Figure 1.3: Electric field lines radiate outward from a positive charge (left) and inward toward a negative charge (right). The field weakens with distance from the source charge.

In a flashlight, the battery creates an electric field inside the wires. That field is what pushes electrons through the circuit.

1.1.3 Potential: Electrical Height

Return to the hillside. If you carry a rock up the hill, you do work against gravity. That work gets stored as potential energy. The higher you go, the more potential energy the rock has. Release it and the stored energy converts to motion.

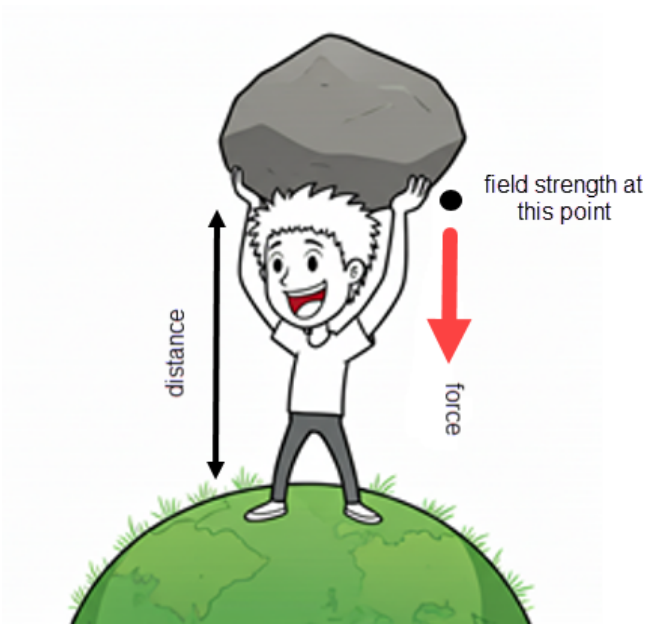

Figure 1.4: Gravitational potential: carrying a mass uphill stores potential energy. The potential difference between two heights determines how much energy is released when the mass moves between them.

Electric potential works exactly the same way. If you move a charge against an electric field, you store potential energy. The electric potential ϕ at a distance r from a charge Q is:

$$\phi_e = k_e \frac{Q}{r} \tag{1.5}$$

The unit of electric potential is the Volt (V), equal to one Joule per Coulomb. What matters in a circuit is not the potential at a single point but the *difference* in potential between two points. This potential difference is what we call *voltage*:

$$\Delta V = \phi(r_2) - \phi(r_1) \tag{1.6}$$

Voltage is the electrical equivalent of height on a hill. A battery creates a voltage difference between its two terminals, just as a hill creates a height difference between its top and bottom. Charges at the negative terminal have higher electrical potential energy, just as a rock at the top of a hill has higher gravitational potential energy. Connect the two terminals through a circuit and the charges flow, releasing energy along the way. That released energy is what lights the bulb.

Table 1.1 summarizes the parallel between gravitational and electrical concepts that will carry through the rest of this course.

Concept	**Gravity**	**Electricity**
Source	Mass	Charge
Force	Gravitational	Electrical (Coulomb)
Field	$\vec{g}$, N/kg	$\vec{E}$, N/C
Potential	Height, m	Voltage, V
Flow when released	Falling mass	Electric current

Table 1.1: Gravitational and electrical concepts compared. The same physical logic connects both columns.

With this foundation in place, we can now look at what happens when charge actually moves, which brings us to electric current and, from there, directly to the flashlight.

1.2 When Charges Go for a Stroll: Exploring Electric Current

So far, we have looked at charges that are stationary. The hill analogy still applies: a charge sitting at a high potential is like a rock sitting at the top of a hill. Nothing happens until it is free to move. When charges do move, that movement is what we call electric current.

Consider an electron free to move in response to an electric force, as shown in Figure 1.5.

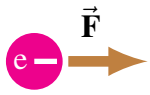

Figure 1.5: An electron in space moving to the right due to an electrostatic force $\vec{\mathbf{F}}$, shown in brown.

Such a force can be created by several charge configurations of stationary charges, as shown in Figure 1.6. The movement of the charge causes a current I to flow. The unit of current is

Coulombs per second, which is known as the Ampere. If the charges creating the electric field are stationary, the current will not change with time. This current is called direct current. If the charges move, a time-varying current is produced, which is called alternating current. For now, we will focus on direct current.

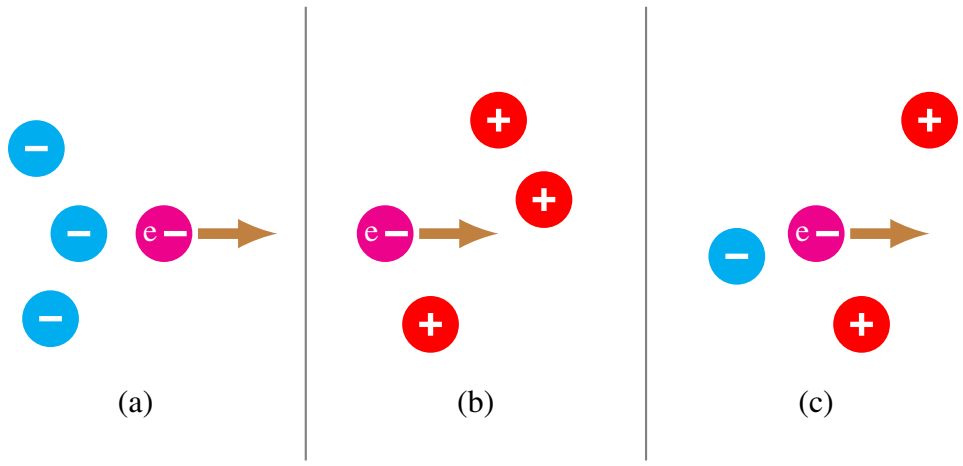

Figure 1.6: Possible forces on an electron in space. a) Negative charges repel the electron. b) Positive charges on the right, attract the electron, and c) a combination of positive and negative charges arranged in such a way that the total effect of the attractive and repulsive forces results in a force directed to the right.

1.3 The Flashlight: Electrical Principles in Action

Podcast: Flashlight

A flashlight is one of the simplest electrical circuits you will ever encounter, and that is exactly what makes it the right place to start. It has a source of energy, a path for current to flow, a way to control that flow, and a device that converts electrical energy into something useful. It has a battery, a switch, wires, and a light source. Every circuit you will analyze in this course, no matter how complex, contains similar elements. Understanding what is actually happening inside a flashlight gives you the physical intuition that everything else in this book builds on.

1.3.1 The Circuit Diagram: A First Look

Engineers use schematic diagrams to represent electrical circuits. Rather than drawing realistic pictures of components, schematics use standardized symbols connected by lines, giving engineers a compact and unambiguous way to communicate circuit designs. Figure 2.1 shows the schematic for a basic flashlight circuit. We will learn to read and draw these diagrams in detail in the next chapter. For now, notice that the circuit forms a complete loop, and that each component has a distinct symbol.

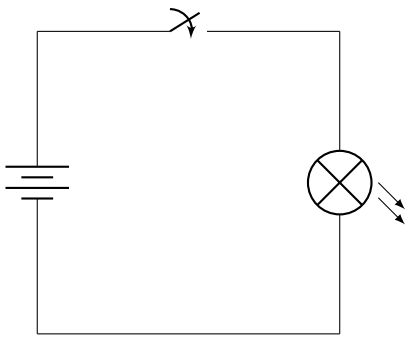

Figure 1.7: Schematic diagram of an incandescent flashlight. The circuit forms a complete loop when the switch is closed, allowing current to flow from the battery through the light bulb.

In this diagram, the battery provides the voltage (electrical pressure) that drives current through the circuit. The switch controls whether the circuit is complete, and the light bulb converts electrical energy into light and heat. Let's examine each component in detail.

1.3.2 The Battery: Chemical Energy to Electrical Energy

A battery works like an "electron pump," using chemical reactions to create a potential difference (voltage) between its terminals. The chemical energy stored in the battery is converted into electrical energy that can power the circuit.

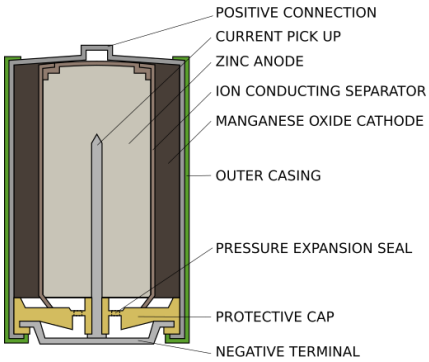

Figure 1.8: Cross-section of a typical alkaline battery showing internal components.

Inside the battery, oxidation-reduction (redox) reactions occur. At the negative terminal (anode), oxidation releases electrons. At the positive terminal (cathode), reduction accepts electrons. This creates an electric field inside the battery that pushes electrons from the negative terminal through the external circuit and back to the positive terminal.

Common battery types include:

- **Alkaline batteries:** Typically 1.5V, used in most flashlights
- **Lithium-ion batteries:** About 3.7V, rechargeable, used in smartphones and portable electronics
- **NiMH (Nickel-Metal Hydride):** Around 1.2V, rechargeable, common in high-drain devices

The voltage of a battery depends on the specific chemical reactions inside it, while its size determines how much energy it can store. Larger batteries contain more reactive materials and can power devices for longer periods.

1.3.3 The Switch: Controlling the Flow

A switch is simply a device that can complete or break a circuit. When you flip the switch on a flashlight, you are connecting or disconnecting the path for electrons to flow. In the off position, the circuit is open and no current flows. In the on position, the circuit is closed, completing the path and allowing current to flow from the battery to the light source. Switches come in many forms, including the push button on your computer, the toggle on your wall, and the sliding switch on a flashlight, but they all serve the same basic purpose: to control when current flows.

1.3.4 The Wires: Pathways for Electrons

Wires are conductors (usually copper) that provide a path for electrons to flow. A good wire has low resistance, allowing current to flow with minimal energy loss. The copper inside the wire contains many free electrons that can move easily when pushed by an electric field.

An interesting fact about wires is that while electrical signals travel at close to the speed of light (allowing the light to turn on almost instantly when you flip the switch), the individual electrons move surprisingly slowly, typically just a few millimeters per second. This phenomenon, called drift velocity, occurs because electrons frequently collide with atoms in the metal. However, the electric field that pushes these electrons propagates much faster, almost like a wave moving through the electrons.

1.3.5 The Light Source: Energy Conversion

The final component of our flashlight is the light source, which converts electrical energy into light. There are two common types of light sources in flashlights:

Incandescent Bulbs: These work through a process called incandescence. Current flows through a thin tungsten filament with high resistance, heating it to about 2500°C until it glows white-hot. The resistance of the filament is given by:

$$R = \frac{\rho L}{A} \tag{1.7}$$

Where ρ is the resistivity of the material, L is the length, and A is the cross-sectional area. This equation shows why thin, long filaments have higher resistance: they force electrons into a narrow, extended path where they experience more collisions.

The relationship between voltage, current, and resistance in these bulbs follows Ohm's Law:

$$V = IR \tag{1.8}$$

Where V is the voltage across the bulb, I is the current flowing through it, and R is the resistance. Incandescent bulbs are inefficient: about 90% of the energy is converted to heat rather than light.

Light-Emitting Diodes (LEDs): Modern flashlights often use LEDs, which operate through a process called electroluminescence. LEDs are semiconductor devices that directly convert electrical energy into light when electrons move through them. When the right voltage is applied, electrons combine with "holes" (places where electrons are missing) in the semiconductor material, releasing energy in the form of photons (light particles).

LEDs are much more efficient than incandescent bulbs, converting about 80–90% of energy into light rather than heat. They also last much longer, up to 50,000 hours compared to around 1,000 hours for incandescent bulbs. However, LEDs have special requirements: they only allow

current to flow in one direction (they are a type of diode), and they need a resistor in the circuit to limit the current:

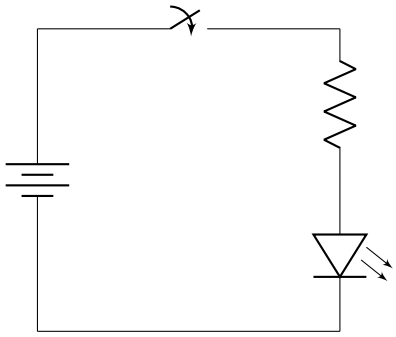

Figure 1.9: Circuit diagram of an LED flashlight, showing the necessary current-limiting resistor in series with the LED.

White light LEDs typically use a blue LED coated with a yellow phosphor. The blue light excites the phosphor, which emits yellow light. The combination of blue and yellow light appears white to our eyes. By adjusting the phosphor composition, manufacturers can create different "color temperatures" from warm (yellowish) to cool (bluish) white light.

1.3.6 Putting It All Together: How a Flashlight Works

When you turn on a flashlight, the following sequence occurs:

1. The switch closes, completing the circuit between the battery, wires, and light source.
2. The battery's chemical potential energy creates an electric field in the wires.
3. This field exerts a force on free electrons in the copper wires.
4. Electrons begin to flow through the circuit, creating an electric current.
5. When these electrons reach the light source:
   - In an incandescent bulb, they heat the filament until it glows.
   - In an LED, they combine with holes in the semiconductor material, releasing energy as photons.

This process continues until either the battery's chemical energy is depleted or the switch is opened, breaking the circuit.

This simple device demonstrates the fundamental principles of electrical engineering that we have covered in this chapter: charge, current, voltage, resistance, and energy conversion. These same principles apply to more complex devices, from smartphones to electric vehicles. The only differences are in the specific components and circuit arrangements.

Conclusion

A flashlight contains every fundamental concept this course builds on. Charge, force, field, voltage, current, resistance, and energy conversion are all present in a device you can hold in your hand. We used the gravitational analogy to make these concepts tangible: voltage is electrical height, current is charge in motion, and the battery is the mechanism that maintains the height difference that keeps everything flowing. We also saw how moving charges create current, and how that current can be used to heat a filament or drive electrons through a semiconductor to produce light. The same logic that explains the flashlight applies to every electrical system you will study from here forward.

Chapter 2

Schematics and Symbols

This chapter introduces the visual language of electrical circuits. You will learn to read circuit schematics, recognize standard component symbols, and use the key terminology that engineers use to describe and analyze circuits. These skills are essential for every lab session and every circuit you will encounter in this course.

Learning Objectives:

- Interpret circuit schematics and recognize standard component symbols
- Apply wire connection conventions to correctly read and draw circuit diagrams
- Recognize open and short circuits and understand their implications
- Identify nodes, branches, and loops in electrical circuits
- Explain conventional current direction and apply it consistently
- Explain the role of ground as a voltage reference in circuit analysis

2.1 Schematics as Abstraction

A schematic is an abstraction. Rather than drawing a realistic picture of a circuit with all its physical detail, a schematic uses standardized symbols and lines to represent components and their connections. This means you can focus entirely on how the circuit behaves electrically, without worrying about what it looks like physically or how large the components are. Just as a map of a city ignores every tree and lamppost in order to show you the roads that matter, a schematic ignores physical layout in order to show you the electrical connections that matter. Learning to read schematics fluently is one of the most practical skills you will develop in this course. You will use it in every lab session and in every circuit you analyze from here forward.

2.2 Circuit Schematics: Lines, Symbols, and Connections

Podcast: Language of ciruits

Circuit schematics provide a standardized visual language that allows engineers to represent complex electrical systems in a simplified, abstract form. Let us explore how these diagrams work and the conventions they follow.

2.2.1 What is a Circuit Schematic?

A circuit schematic (or circuit diagram) is a graphical representation of an electrical circuit using standardized symbols to represent components and lines to represent the connections between them. The flashlight circuit from Chapter 1 is a good example of a simple schematic.

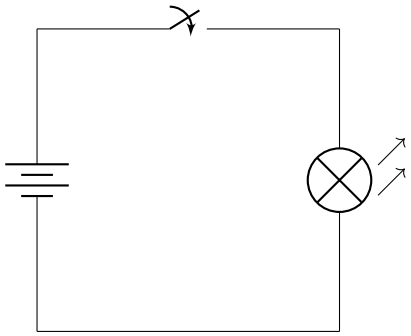

Figure 2.1: Electrical circuit schematic of a flashlight. This abstract representation allows us to focus on the electrical behavior of the circuit independently from its physical layout.

A schematic does not necessarily show the physical arrangement of components. It focuses on electrical connections and functions. This allows engineers to analyze circuit behavior without being distracted by physical details.

The term "circuit" refers to any combination of connected components, but a "complete circuit" specifically describes a path that allows charges to flow in a closed loop. In the flashlight example, closing the switch creates a complete circuit, allowing current to flow and the lamp to light up.

2.2.2 Standard Circuit Symbols

Standardization is essential in engineering. It ensures that schematics can be understood by anyone with the proper training, regardless of where or when they were created. Here are the most common symbols you will encounter:

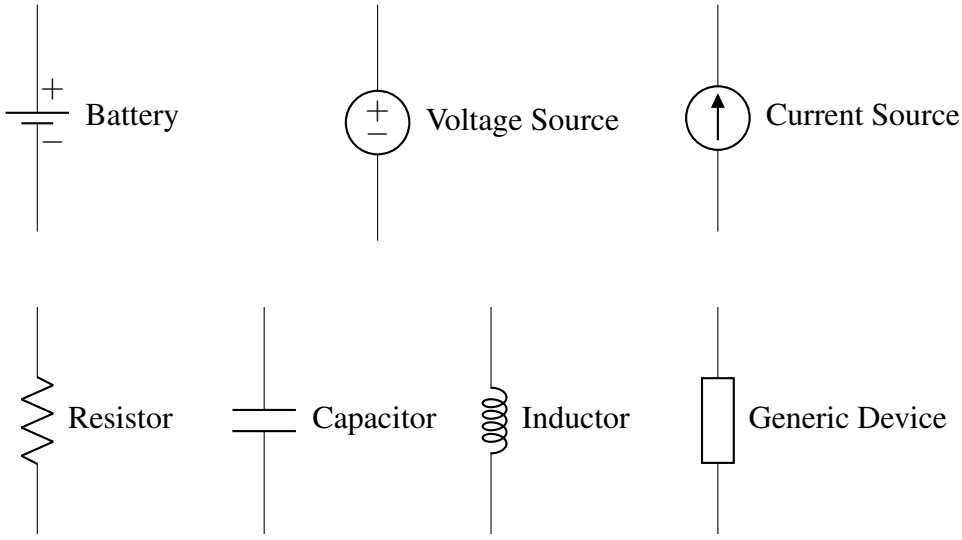

Figure 2.2: Common circuit elements and their schematic symbols.

2.2.3 Schematic Drawing Conventions

Circuit schematics follow several conventions that make them easier to read and understand:

1. Inputs are generally on the left and outputs on the right, with signal flow from left to right.
2. Voltage sources have a $\pm$ sign within the symbol, and current sources have an arrow.
3. The most positive supply voltage is typically drawn at the top and the most negative at the bottom. Positive current flow is therefore generally from top to bottom.

2.2.4 Wire Connections and Junctions

Understanding how wires connect in a schematic is critical for correct circuit interpretation, and for correctly wiring circuits in the lab.

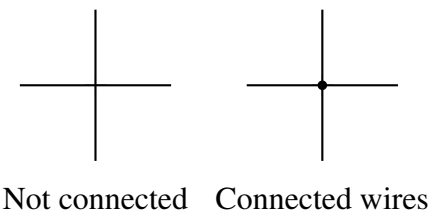

Figure 2.3: Crossing wires in schematics. A simple crossing (left) indicates no electrical connection. A dot at the intersection (right) indicates wires that are electrically connected.

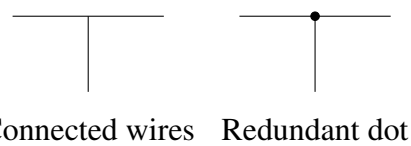

Figure 2.4: T-junctions in schematics. A T-junction (left) always indicates connected wires, making the dot at the junction (right) redundant.

2.2.5 Open and Short Circuits

Two important circuit conditions to understand before working in lab are open and short circuits.

Open Circuit: A break in the circuit that prevents charge flow. This occurs when a switch is open or a wire is disconnected.

Short Circuit: A direct low-resistance connection that allows charges to flow freely, often bypassing other circuit elements. Short circuits can be dangerous because they allow excessive current to flow.

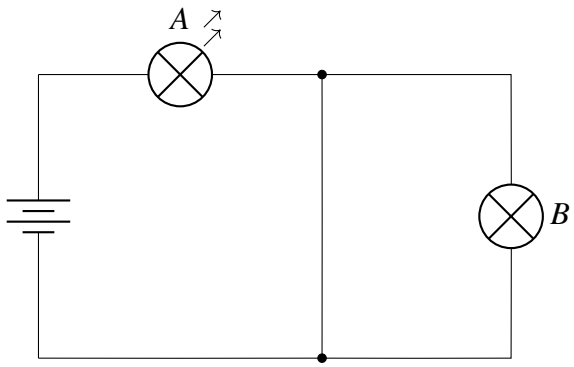

Figure 2.5: Short circuit example. Light bulb B will not light up because current bypasses it through the short circuit path (the wire to the left). Light A works normally because current must flow through it to complete the circuit.

In the circuit shown in Figure 2.5, light B is shorted out because the wire provides a path of very low resistance that bypasses the bulb. Most of the current flows through the wire rather than the bulb, so the bulb does not light up. If a short circuit occurs across a power source like a battery, excessive current can flow, potentially causing overheating, battery damage, or fire.

2.3 Nodes, Branches, and Loops

Podcast: Nodes, Branches and Loops

When analyzing circuits, engineers use specific terminology to describe different parts of the circuit. Understanding these terms is essential for circuit analysis and for communicating clearly with other engineers.

2.3.1 Key Circuit Elements

Three fundamental concepts in circuit analysis are nodes, branches, and loops:

- A **node** is a point where two or more components connect in a circuit. Every point connected by a wire (with no components in between) belongs to the same node, regardless of how the connections are structured. Nodes are typically represented by dots or small circles at the intersection of wires.

- A **branch** is a path connecting two distinct nodes. A branch may contain one or more circuit components. Current flows along branches from one node to another.
- A **loop** is a closed path that starts and ends at the same node without retracing any part of the path. Loops may contain one or more branches.

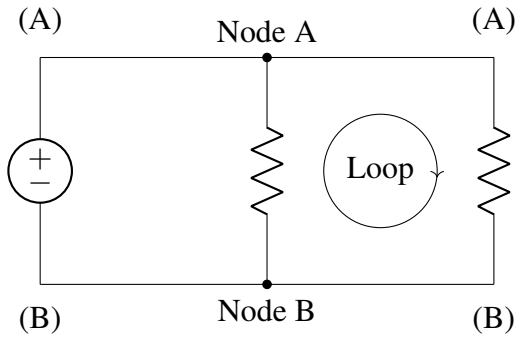

Figure 2.6: Illustration of nodes and loops in a simple circuit. The circuit has two main nodes (A and B) and multiple possible loops. The highlighted loop follows a path through the right resistor.

2.3.2 Why These Terms Matter

These terms are not just abstract definitions. They are the vocabulary of circuit analysis. The main analysis techniques you will use in later chapters all depend on them:

- **Nodal analysis** finds the voltage at each node using Kirchhoff's Current Law
- **Mesh analysis** uses loops to apply Kirchhoff's Voltage Law
- **Branch current method** determines the current in each branch

Understanding these terms now gives you a solid foundation for Chapter 5, where these analysis techniques are introduced.

2.3.3 Practical Example

Let us identify the nodes, branches, and loops in a simple circuit:

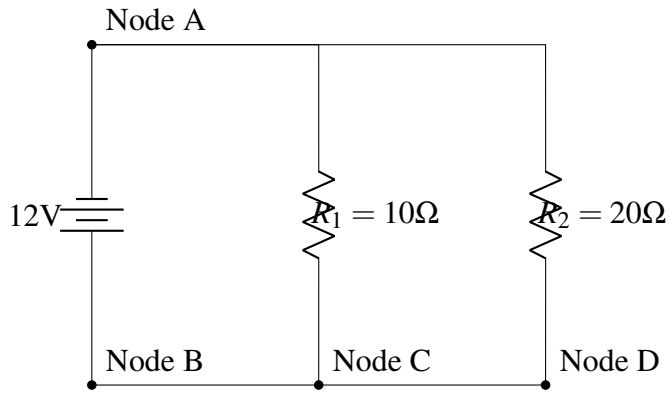

Figure 2.7: A simple circuit with labeled nodes. The circuit contains a battery and two resistors.

In this circuit there are 4 nodes (A, B, C, and D), 5 branches (the battery, two resistors, and two connecting wires), and several loops, including the left loop through the battery and R_1 and the right loop through the battery and R_2.

2.3.4 Additional Resources

- Circuit terminology: Terms and Concepts (Khan Academy)
- Circuit terminology: Khan Academy (video)
- Electrical networks: Wikipedia

2.4 Current, Voltage, and Ground

Now that we understand the structure of circuits, let us look at the fundamental quantities that describe their behavior: current, voltage, and ground.

2.4.1 Current: The Flow of Charge

Current is the rate of charge flow through a conductor, measured in amperes (A). One ampere represents one coulomb of charge passing a point per second.

Real-World Current Values

To develop an intuition for current magnitudes: small electronic devices such as LEDs and microcontrollers typically use milliamps (mA, or 1/1000 of an ampere). A cell phone charges at around 1–3A and a laptop might use 3–5A. A standard 60W incandescent light bulb draws about 0.5A at 120V, a desktop computer might draw 5–10A during heavy processing, and an electric car motor can draw hundreds of amperes during acceleration.

Current alone does not tell the whole story. A small current at high voltage can transfer significant power, while a large current at low voltage might transfer very little.

Conventional Current Direction

This is one of the most important conventions in electrical engineering, and a common source of confusion. In metal conductors, the actual particles that move are electrons, which carry a negative charge. Electrons flow from the negative terminal of a battery toward the positive terminal.

However, by historical convention, electric current is defined as the flow of *positive* charge, which means conventional current flows in the *opposite* direction to electron flow: from positive terminal to negative terminal around the external circuit.

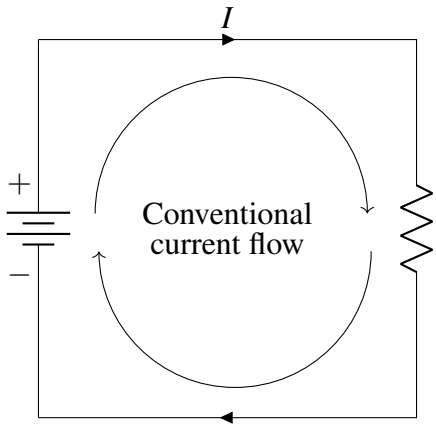

Figure 2.8: Conventional current flows from the positive terminal, through the external circuit, and back to the negative terminal. Electrons physically move in the opposite direction. As long as this convention is applied consistently, all circuit analysis remains correct.

This convention is used universally in circuit analysis. As long as you apply it consistently, your calculations will be correct. When your instructor asks which way current flows in a circuit, the answer is always in terms of conventional current.

Current Notation

In electrical engineering, current is typically represented as follows: i denotes the general case (which may or may not vary with time), $i(t)$ denotes a time-varying current, and I denotes a constant DC current.

2.4.2 Voltage: The Electrical Pressure

Voltage is the electric potential difference between two points in a circuit. It represents the energy per unit charge, measured in volts (V). The gravity analogy from Chapter 1 applies directly here: voltage is electrical height. A battery creates a voltage difference between its terminals just as a hill creates a height difference between its top and bottom.

Real-World Voltage Values

To develop intuition for voltage magnitudes: digital electronics typically operate at 3.3V or 5V, AA and AAA batteries provide 1.5V, and lithium-ion batteries in phones and laptops provide around 3.7V. Household electricity is 120V in North America and 220–240V in Europe and Asia. High-voltage power lines can operate at thousands or hundreds of thousands of volts.

It is important to note that voltage alone does not determine safety. The danger comes from the combination of voltage and current. Static electricity can reach thousands of volts but carries very little current, while household electricity at much lower voltage can be lethal because it can deliver sufficient current through the body.

2.4.3 Ground: The Reference Point

What is Ground?

In circuit analysis, ground serves as a reference point for measuring voltages. It is represented by special symbols in circuit diagrams:

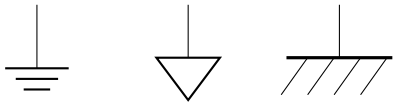

Figure 2.9: Common ground symbols used in circuit diagrams.

The term "ground" originally referred to a connection to the Earth's potential, but in modern circuit design it often simply designates a zero-volt reference point, which may or may not be physically connected to Earth.

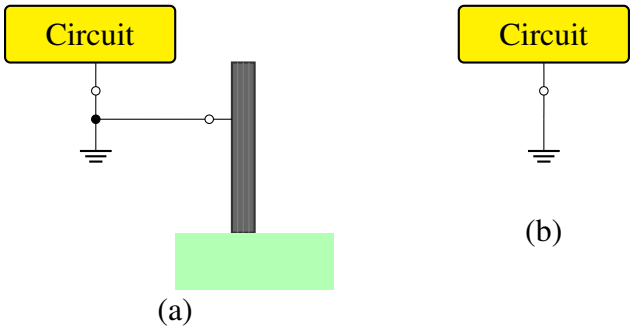

Figure 2.10: (a) True ground connection to earth potential. (b) Ground symbols in circuits do not necessarily connect to earth potential. They designate a shared voltage reference point.

Types of Voltage Measurements

Since voltage is always measured as a difference between two points, we distinguish between two types of measurements. A **single-ended voltage** is measured between a point and ground (the reference). When we say "the voltage at node A is 5V," we mean it is 5V with respect to ground. A **differential voltage** is measured between two arbitrary points, neither of which may be ground. This is often called "the voltage across" a component or "the voltage between" two nodes.

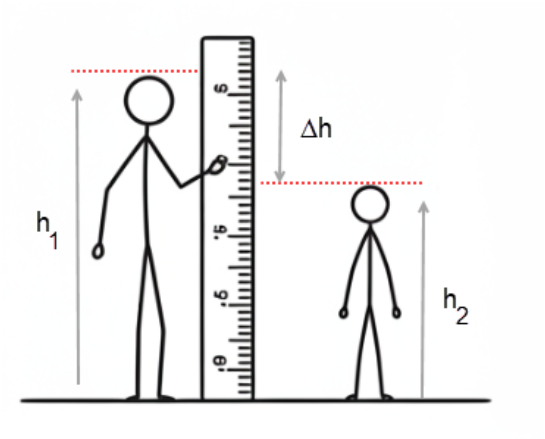

(a) Height measurements provide a good analogy for voltage. The height of each person relative to ground level (h_1 and h_2) is like single-ended voltage. The height difference between them ($h_1 - h_2$) is like differential voltage.

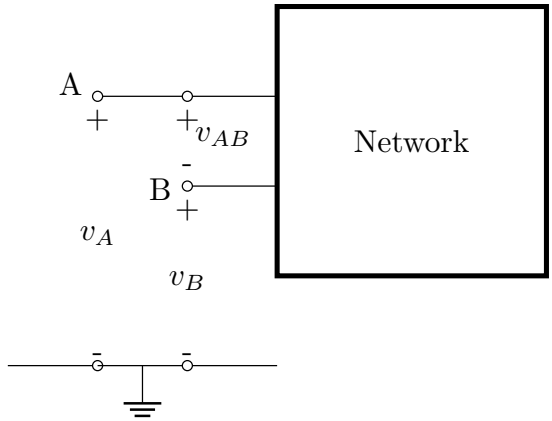

(b) Voltage measurements in a circuit. Single-ended voltages v_A and v_B are measured relative to ground. The differential voltage v_{AB} is measured between points A and B.

Figure 2.11: Height-voltage analogy illustrating different types of voltage measurements.

Just as height is always measured relative to a reference (usually ground level), voltage is always measured relative to a reference point (usually the circuit ground).

2.4.4 Additional Resources

- Electrical Current (Khan Academy)
- Current Direction (Khan Academy)
- Conventional Current Direction (Khan Academy)
- Voltage Intuition (Khan Academy)

2.5 The Water Analogy

You may encounter the water analogy as an alternative way to think about electrical circuits. It maps electrical quantities onto a familiar physical system: water flowing through pipes. Voltage corresponds to water pressure, current to flow rate, resistance to the narrowness of a pipe, and a battery to a pump that maintains the pressure difference driving the flow. Table 2.1 summarizes the correspondence. This analogy works well for building intuition about DC circuits and is widely used in introductory courses. It has limits, as it breaks down for AC circuits and has no equivalent for electromagnetic fields, but for the circuits in this chapter it provides a useful mental model alongside the gravitational analogy introduced in Chapter 1.

Water System	**Electrical Circuit**
Water	Electrical charge
Flow rate (liters/second)	Current (amperes)
Pressure (pascals)	Voltage (volts)
Pipe diameter and length	Resistance (ohms)
Pump	Battery or power source
Pipe walls	Insulators
Pipes	Conductors
Closed valve	Open circuit
Bypass pipe	Short circuit
Reservoir	Ground reference

Table 2.1: Water-electricity analogy. Each electrical quantity maps onto a familiar property of water flow.

Additional Resources

- An Introduction to Simple Electric Circuits (3rd Edition)

Chapter Summary

This chapter introduced the language engineers use to represent and discuss electrical circuits. A schematic is an abstraction: it replaces physical components with standardized symbols and focuses entirely on electrical connections. Reading schematics fluently, including understanding wire junctions, open circuits, and short circuits, is a practical skill you will use in every lab.

Nodes, branches, and loops give us a shared vocabulary for describing circuit structure. These terms are the foundation of the analysis techniques covered in Chapter 5. Current is the flow of charge, measured in amperes, and by convention flows from the positive terminal of a source through the external circuit to the negative terminal. Voltage is the electrical potential difference between two points, always measured relative to a reference, which we call ground.

Power, which describes how energy is transferred through a circuit, is covered in Chapter 5 alongside Ohm's Law and Kirchhoff's Laws, where it fits naturally into the analysis workflow.

Chapter 3

Unveiling the Secrets of DC Circuits

This chapter focuses on direct current (DC) circuits containing resistors. You will learn how to analyze circuits where electric charge flows consistently in a single direction, and discover fundamental laws and techniques for understanding circuit behavior.

Learning Objectives:

- Apply Kirchhoff's Current and Voltage Laws to analyze DC circuits
- Calculate power supplied and absorbed in DC circuits
- Analyze series and parallel resistive circuits
- Use voltage divider principles to determine voltages in resistive circuits
- Understand how measuring instruments interact with circuits
- Apply circuit simplification techniques to solve complex problems

3.1 Kirchhoff's Laws: Currents' Crossroads and Voltage's Roundabout

Podcast: Kirchhoff Laws

Kirchhoff's Laws are fundamental tools in electrical circuit analysis that allow us to analyze complex circuits by relating currents and voltages. These laws are based on the principles of conservation of charge and energy, making them universally applicable to all electrical circuits.

3.1.1 Currents at Node (KCL)

Kirchhoff's Current Law (KCL) is based on the conservation of charge. It states that:

The sum of all currents entering a node equals the sum of all currents leaving that node.

A node is a point where multiple wires are connected. Since charge cannot accumulate at any point in the circuit, the net current flowing into any node must be zero. This can be expressed mathematically as:

$$\sum_{i=1}^{n} I_i = 0 \tag{3.1}$$

where I_i represents individual currents at the node, and n is the total number of currents at that node. By convention, currents entering the node are considered positive, and currents leaving are considered negative.

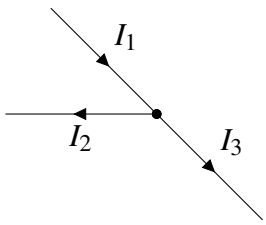

Figure 3.1: KCL application at a node: Current I_1 enters the node, while currents I_2 and I_3 leave. By KCL, $I_1 = I_2 + I_3$ or equivalently $I_1 - I_2 - I_3 = 0$.

3.1.2 Applying KCL

To apply KCL in circuit analysis, follow these steps:

1. **Identify the Nodes:** Find all points where three or more circuit elements connect.

2. **Assign Current Directions:** For each branch connected to a node, assign a direction to the current. The actual direction does not need to be known beforehand. If the assumption is incorrect, the calculated current will simply be negative.

3. **Apply KCL at Each Node:** Write an equation based on KCL. You can express this as either:

   - Sum of currents entering equals sum of currents leaving: $\sum I_{\text{in}} = \sum I_{\text{out}}$
   - Algebraic sum of currents equals zero: $\sum I_i = 0$ (currents entering are positive, currents leaving are negative)

4. **Solve the Equations:** Apply KCL to all but one node in the circuit (the remaining equation would be redundant). Combine with other circuit relationships to solve for unknown currents.

Note

For a circuit with n nodes, you can write at most $n-1$ independent KCL equations. The remaining equation can be derived from the others.

Example 1: Finding Currents in a Parallel Circuit

What are the currents I_1 and I_2 flowing through resistors R_1 and R_2 in this circuit?

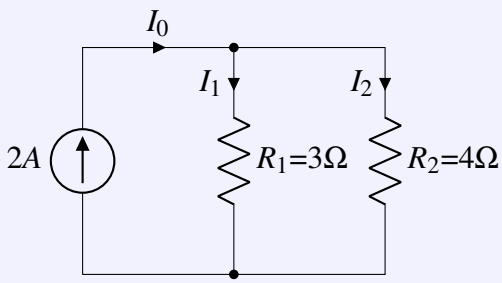

Solution

Applying Kirchhoff's Current Law (KCL) at the top node, we can relate the source current to the branch currents. Assuming both I_1 and I_2 are leaving the node (as indicated by the current arrows in the figure), KCL gives:

$$2 = I_1 + I_2 \tag{3.2}$$

Since the resistors are connected in parallel, the voltage drop across them is the same. Applying Ohm's law ($V = IR$) to each resistor:

$$3I_1 = 4I_2 \tag{3.3}$$

Solving for I_1 in terms of I_2:

$$I_1 = \frac{4}{3}I_2 \tag{3.4}$$

Substituting into the KCL equation:

$$2 = \frac{4}{3}I_2 + I_2 = \frac{7}{3}I_2 \tag{3.5}$$

Solving for I_2:

$$I_2 = \frac{6}{7}\,\mathrm{A} \approx 0.857\,\mathrm{A} \tag{3.6}$$

Then, finding I_1:

$$I_1 = \frac{8}{7}\,\mathrm{A} \approx 1.143\,\mathrm{A} \tag{3.7}$$

Verification: The voltage across each resistor must be the same. $V_1 = I_1 \cdot R_1 = \frac{8}{7} \cdot 3 = \frac{24}{7}\mathrm{V} \approx 3.43\mathrm{V}$ and $V_2 = I_2 \cdot R_2 = \frac{6}{7} \cdot 4 = \frac{24}{7}\mathrm{V} \approx 3.43\mathrm{V}$
The voltages match, confirming the solution.

Example 2: Battery and Parallel Resistors

What are the currents I_0, I_1, and I_2 in this circuit?

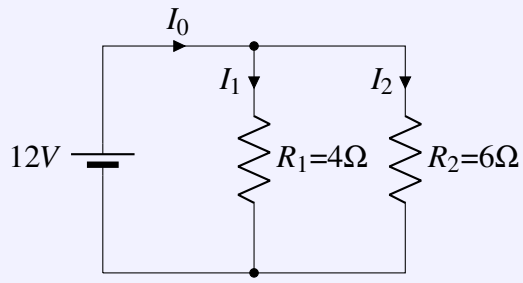

Solution

At the node where R_1 and R_2 meet, applying KCL gives:

$$I_0 = I_1 + I_2$$

Since the resistors are connected in parallel, both see the same voltage drop of 12 V. Using Ohm's Law:

$$I_1 = \frac{12}{4} = 3\,\text{A}$$

$$I_2 = \frac{12}{6} = 2\,\text{A}$$

Therefore:

$$I_0 = I_1 + I_2 = 3\,\text{A} + 2\,\text{A} = 5\,\text{A}$$

3.1.3 Voltage's Voyage: A Loop de Loop (KVL)

Kirchhoff's Voltage Law (KVL) is based on the principle of energy conservation. It states that:

The sum of all voltage drops and rises around any closed loop in a circuit must be equal to zero.

This implies that the net change in energy for a charge traversing a closed loop is zero. Consider the circuit in Figure 3.2, which contains four circuit elements. Applying KVL to this loop:

$$V_1 + V_2 + V_3 + V_4 = 0 \tag{3.8}$$

where V_i represents the voltage across each component.

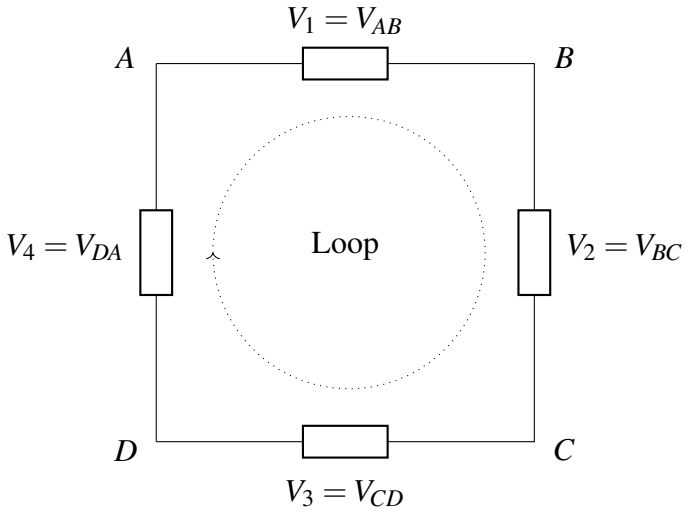

Figure 3.2: KVL: The sum of voltages around a closed loop is zero.

3.1.4 Applying KVL

To apply KVL in circuit analysis, follow these steps:

1. **Identify Loops:** Find closed paths in the circuit where you start and end at the same node.

2. **Choose a Direction:** For each loop, choose either clockwise or counterclockwise as your traversal direction.

3. **Assign Voltage Signs:** As you move around the loop:

   - For voltage sources: if you move from the negative to the positive terminal, assign a positive sign (voltage rise). If you move from positive to negative, assign a negative sign (voltage drop).

   - For resistors or other passive elements: if the assumed current direction matches your loop direction, assign a negative sign (voltage drop). If the directions are opposite, assign a positive sign.

4. **Write the KVL Equation:** Sum all voltages around the loop with proper signs and set the sum equal to zero.

5. **Solve:** Combine with other circuit relationships to find unknown voltages and currents.

Example 3: Finding a Voltage Using KVL

Consider a circuit with a 10 V voltage source and two passive elements #1 and #2. What is the voltage V_{AB} across element #1?

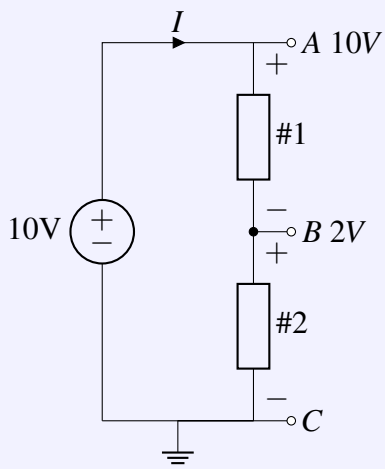

Solution

Since the node voltages (relative to ground) at both ends of element #1 are known, V_{AB} can be found directly from the difference:

$$V_{AB} = V_A - V_B = (10-2)\,\mathrm{V} = 8\,\mathrm{V}$$

Alternatively, a KVL equation for the loop containing element #1 gives:

$$10\,\mathrm{V} - V_{AB} - V_{BC} = 0$$

Solving for V_{AB}:

$$V_{AB} = 10 - V_{BC} = (10-2)\,\mathrm{V} = 8\,\mathrm{V}$$

Both approaches yield the same result.

Example 4: Using KVL to Find Current

What is the current I in this circuit?

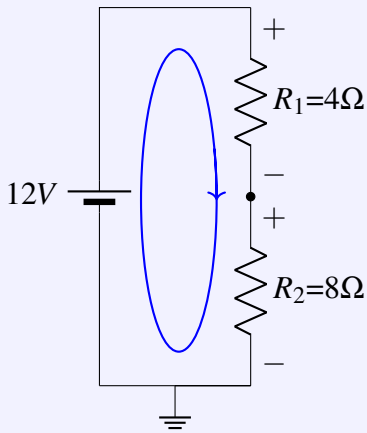

Solution

To apply KVL to this circuit:

1. **Choose a Loop:** The entire circuit forms a single loop.
2. **Assign a Direction:** We will traverse the loop clockwise, as indicated by the blue arrow.
3. **Determine Voltage Changes:** As we move around the loop:
   - **Battery:** Moving from negative to positive terminal gives a voltage rise of $+12\,\text{V}$.
   - **Resistor R_1:** With current flowing clockwise, the voltage drop is $-IR_1 = -4I$ volts.
   - **Resistor R_2:** Similarly, the voltage drop is $-IR_2 = -8I$ volts.
4. **Apply KVL:** The sum of voltages around the loop must equal zero:
$$12 - 4I - 8I = 0$$
5. **Solve for I:**
$$12 - 12I = 0$$
$$12I = 12$$
$$I = 1\,\text{A}$$

The current in the circuit is 1 ampere.

Example 5: KVL with Multiple Sources

What is the current I in this circuit with two voltage sources?

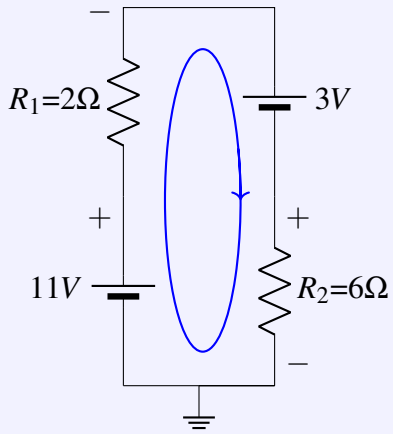

Solution

1. **Choose a loop:** The entire circuit forms a single loop.
2. **Assign a direction:** Clockwise, as shown by the blue arrow.
3. **Identify voltage drops and rises:**
   - V_1 (11 V battery): $+11\,\text{V}$ (traversing from negative to positive)
   - R_1 (2 Ω resistor): $-2I$
   - V_2 (3 V battery): $-3\,\text{V}$ (traversing from positive to negative)
   - R_2 (6 Ω resistor): $-6I$
4. **Apply KVL:**
$$11 - 2I - 3 - 6I = 0$$
5. **Solve:**
$$8 - 8I = 0$$
$$8I = 8$$
$$I = 1\,\text{A}$$

The current in the circuit is 1 ampere.

In the circuit of Example 3.1.4, because of KCL (the current is the same through all components in a single loop), the circuit can also be drawn as:

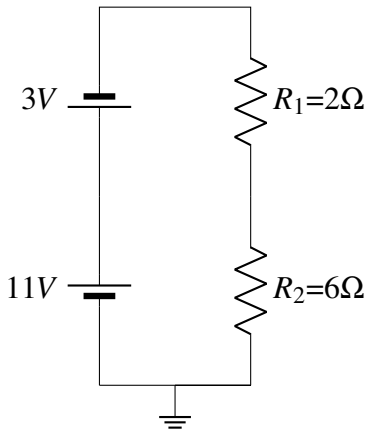

This further reduces to the circuit below, because by KVL the 3 V battery subtracts from the 11 V battery to give an effective 8 V source:

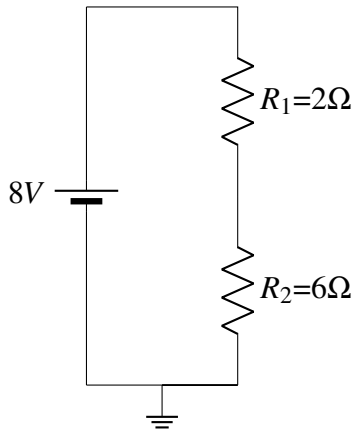

3.1.5 Additional Resources

For more information on Kirchhoff's Laws, check out these resources:

- Kirchhoff's Rules (Laws) – Introduction (Video)
- Kirchhoff's Circuit Laws (Wikipedia)

3.2 Power and Energy in DC Circuits

Podcast: Power in Electrical Circuits

In Chapter 1, electric potential was described as analogous to height: a charge at higher potential holds stored energy, just as a rock on a hill holds gravitational potential energy. When charges move through a circuit, that stored energy is transferred to the components they pass through. Power is the rate at which this transfer occurs.

3.2.1 Energy Transfer in Circuits

A common misconception about electrical circuits is that current gets consumed as it flows through components. Electrical charge is conserved. What actually happens is that energy is transferred and transformed as charges move through the circuit. The charges themselves continue to circulate; only their energy changes form.

3.2.2 Calculating Power

Power is the rate at which energy is transferred. In electrical systems, the power exchanged by any element is the product of the voltage across it and the current through it:

$$P = V \times I \tag{3.9}$$

where P is power in watts (W), V is voltage in volts (V), and I is current in amperes (A). The sign of the result distinguishes two cases. When P is positive, the element absorbs energy and converts it to another form, as a resistor does when it produces heat. When P is negative, the element supplies energy to the rest of the circuit, as a battery does when it discharges.

3.2.3 Power in Resistors

For a resistor, the relationship $V = IR$ allows the power equation to be written in two additional equivalent forms:

$$P = I^2R = \frac{V^2}{R} \tag{3.10}$$

Both forms are useful: the first when current is known, the second when voltage is known. Because R is always positive, power absorbed by a resistor is always positive. A resistor never supplies energy; it only absorbs it.

Note

Every resistor has a maximum power rating, expressed in watts. Exceeding this rating causes the resistor to overheat. Common discrete resistors are rated at $\frac{1}{4}$ W or $\frac{1}{2}$ W. When designing a circuit, always verify that the expected power dissipation stays within the component's rating.

3.2.4 Power Conservation

Because energy is conserved, the total power supplied in a circuit must equal the total power absorbed:

$$\sum P_{\text{supplied}} = \sum P_{\text{absorbed}} \tag{3.11}$$

This identity provides a useful check: after computing all currents and voltages in a circuit, the power balance should hold exactly.

3.2.5 Energy vs. Power

Power is the rate of energy transfer, while energy is the total amount of work done over a period of time. The relationship is:

$$E = P \times t \tag{3.12}$$

where E is energy in joules (J) and t is time in seconds (s). In practical contexts, energy is often expressed in watt-hours (Wh): a 60 W bulb running for one hour consumes 60 Wh, or 216,000 J.

Example 6: Power in a Series Circuit

Using the circuit from Example 3.1.4 (a 12 V source with $R_1 = 4\,\Omega$ and $R_2 = 8\,\Omega$ in series), calculate the power supplied by the source and the power absorbed by each resistor. Verify that power is conserved.

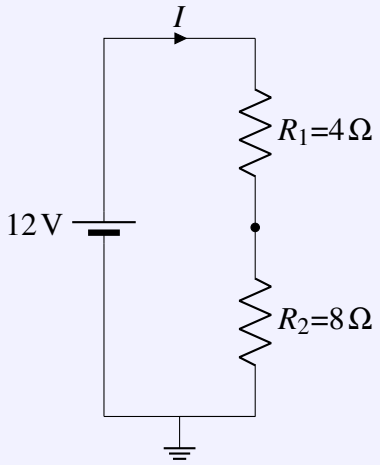

Solution

From Example 3.1.4, the current in the circuit is $I = 1\,\text{A}$.
Power supplied by the source:

$$P_{\text{source}} = V \times I = 12 \times 1 = 12\,\text{W} \tag{3.13}$$

Power absorbed by R_1:

$$P_{R_1} = I^2 R_1 = (1)^2 \times 4 = 4\,\text{W} \tag{3.14}$$

Power absorbed by R_2:

$$P_{R_2} = I^2 R_2 = (1)^2 \times 8 = 8\,\text{W} \tag{3.15}$$

Checking conservation:

$$P_{R_1} + P_{R_2} = 4\,\text{W} + 8\,\text{W} = 12\,\text{W} = P_{\text{source}} \checkmark \tag{3.16}$$

The power delivered by the source is completely absorbed by the two resistors, as expected.

Example 7: Power Rating Check in a Voltage Divider

A voltage divider consists of $R_1 = 4.7\,\text{k}\Omega$ and $R_2 = 3.3\,\text{k}\Omega$ connected in series across a 12 V source (this is the circuit from Example 3.4.2 in Section 3.4). Standard $\frac{1}{4}$ W resistors are available. Determine whether they are adequate for this application.

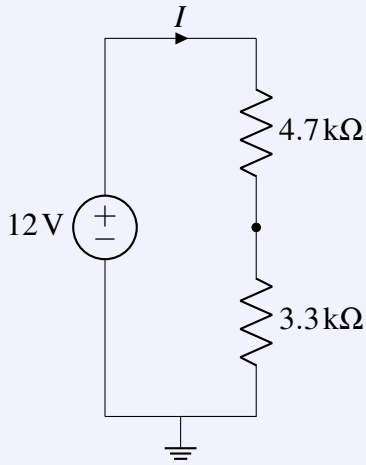

Solution

The total series resistance is $R_{\text{total}} = 4.7\,\text{k}\Omega + 3.3\,\text{k}\Omega = 8\,\text{k}\Omega$.
The current through the divider is:

$$I = \frac{V}{R_{\text{total}}} = \frac{12}{8} = 1.5\,\text{mA} \tag{3.17}$$

Power absorbed by each resistor:

$$P_{R_1} = I^2 R_1 = (1.5 \times 10^{-3})^2 \times 4700 \approx 10.6\,\text{mW} \tag{3.18}$$

$$P_{R_2} = I^2 R_2 = (1.5 \times 10^{-3})^2 \times 3300 \approx 7.4\,\text{mW} \tag{3.19}$$

Both values are well below 250 mW (the $\frac{1}{4}$ W rating), so standard resistors are adequate. The total power drawn from the source is approximately 18 mW.
This calculation illustrates why voltage dividers intended only as reference networks are built from high-value resistors: high resistance reduces current, which reduces power dissipation.

3.3 Series and Parallel Connections

Podcast: Series and Parallel Connections

Two fundamental ways to connect circuit elements are in series and in parallel. Understanding these connection types simplifies the analysis of complex circuits by allowing us to reduce them to simpler equivalent circuits.

3.3.1 Defining Series and Parallel Connections

Series Connection

Two circuit elements are connected in series when they share a single node that connects only these two devices. This means:

- The elements are connected end-to-end
- The same current flows through both elements
- Every charge leaving one element must pass through the other

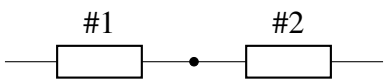

Figure 3.3: Components #1 and #2 are connected in series.

Parallel Connection

Two elements are connected in parallel when they are connected across the same two nodes. This means:

- Both elements share the same two connection points
- The voltage across both elements is identical
- Current divides between the elements

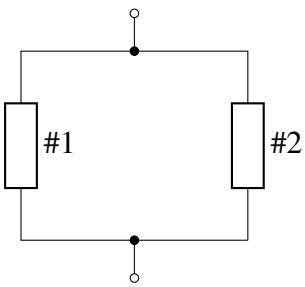

Figure 3.4: Components #1 and #2 are connected in parallel.

3.3.2 Combinations of Series and Parallel

Many circuits contain combinations of series and parallel connections. In such cases, it is often helpful to identify which components are in series and which are in parallel, and then simplify the circuit step by step.

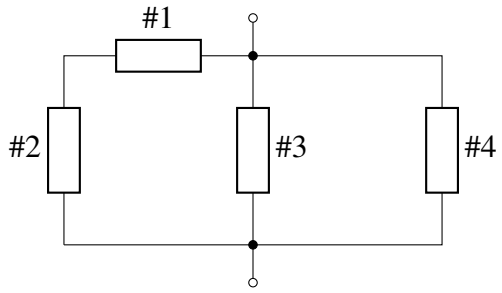

Figure 3.5: A complex circuit: Components #1 and #2 are in series. The series combination of #1 and #2 is in parallel with the series combination of #3 and #4.

3.3.3 Resistors in Series

When resistors are connected in series, the total resistance is the sum of the individual resistances:

$$R_{total} = R_1 + R_2 + \ldots + R_n \tag{3.20}$$

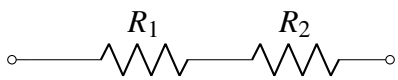

Figure 3.6: Resistors in series. The total resistance is $R_{total} = R_1 + R_2$

Some key properties of series-connected resistors:

- The same current flows through each resistor
- The voltage divides across the resistors proportionally to their resistance values
- If $R_1 \gg R_2$ (R_1 is much larger than R_2), then $R_{total} \approx R_1$
- If $R_1 = R_2$, then $R_{total} = 2R_1$

Example 8: Resistors in Series

Calculate the total resistance of a 330 Ω resistor in series with a 470 Ω resistor.

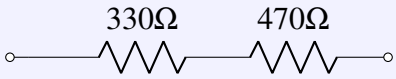

Solution

Using the series resistance formula: $R_{total} = R_1 + R_2 = 330\,\Omega + 470\,\Omega = 800\,\Omega$
If a voltage of 8 V is applied across this series combination, the current is: $I = \frac{V}{R_{total}} = \frac{8}{800} = 10\,\text{mA}$
This 10 mA current flows through both resistors. The voltage across each resistor is: $V_1 = I \cdot R_1 = 10 \times 10^{-3} \cdot 330 = 3.3\,\text{V}$ and $V_2 = I \cdot R_2 = 10 \times 10^{-3} \cdot 470 = 4.7\,\text{V}$
Note that $V_1 + V_2 = 3.3\,\text{V} + 4.7\,\text{V} = 8\,\text{V}$, which equals the total applied voltage.

3.3.4 Resistors in Parallel

When resistors are connected in parallel, the reciprocal of the total resistance equals the sum of the reciprocals of the individual resistances:

$$\frac{1}{R_{total}} = \frac{1}{R_1} + \frac{1}{R_2} + \ldots + \frac{1}{R_n} \tag{3.21}$$

For two resistors in parallel, this simplifies to:

$$R_{total} = \frac{R_1 R_2}{R_1 + R_2} \tag{3.22}$$

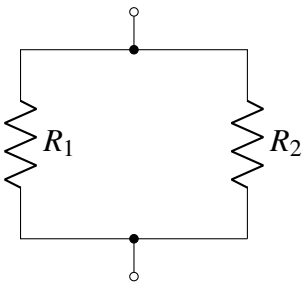

Figure 3.7: Resistors in parallel. The total resistance is $R_{total} = \frac{R_1 R_2}{R_1 + R_2}$

Some key properties of parallel-connected resistors:

- The same voltage appears across each resistor
- The current divides between the resistors inversely proportional to their resistance values
- The total resistance is always less than the smallest individual resistance

Two useful approximations for parallel resistance:

- If $R_1 \gg R_2$ (R_1 is much larger than R_2), then $R_{total} \approx R_2$
- If $R_1 = R_2$, then $R_{total} = R_1/2$

Example 9: Resistors in Parallel

Calculate the total resistance of a 100 Ω resistor in parallel with a 200 Ω resistor.

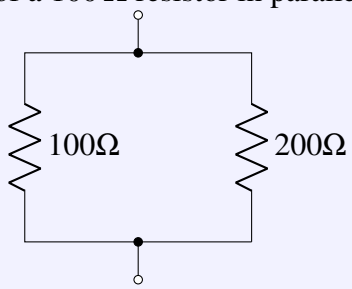

Solution

Using the parallel resistance formula: $R_{total} = \frac{R_1 \cdot R_2}{R_1 + R_2} = \frac{100 \cdot 200}{100+200} = \frac{20{,}000}{300} = 66.7\,\Omega$
If a voltage of 10 V is applied across this parallel combination, the total current is:
$I_{total} = \frac{V}{R_{total}} = \frac{10\,\text{V}}{66.7\,\Omega} = 0.15\,\text{A} = 150\,\text{mA}$
This current divides between the two resistors: $I_1 = \frac{V}{R_1} = \frac{10}{100} = 0.1\,\text{A} = 100\,\text{mA}$
$I_2 = \frac{V}{R_2} = \frac{10}{200} = 0.05\,\text{A} = 50\,\text{mA}$
Verification: $I_1 + I_2 = 100\,\text{mA} + 50\,\text{mA} = 150\,\text{mA} = I_{total}$, confirming Kirchhoff's Current Law.

Example 10: Special Case: Equal Resistors in Parallel

Calculate the equivalent resistance of three identical 120 Ω resistors connected in parallel.

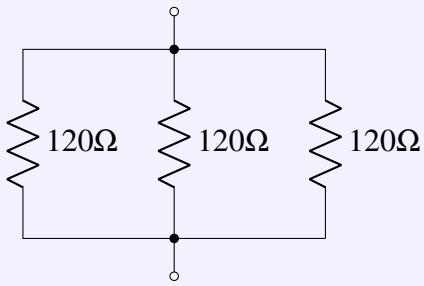

Solution

For n identical resistors of value R connected in parallel, the equivalent resistance is: $R_{total} = \frac{R}{n}$
In this case: $R_{total} = \frac{120\,\Omega}{3} = 40\,\Omega$
Verification using the general formula: $\frac{1}{R_{total}} = \frac{1}{120} + \frac{1}{120} + \frac{1}{120} = \frac{3}{120} = \frac{1}{40}$
Therefore, $R_{total} = 40\,\Omega$.

3.3.5 Series-Parallel Combinations

Many practical circuits involve combinations of series and parallel connections. To analyze these circuits, simplify them step by step, replacing series or parallel combinations with their equivalent resistances.

Example 11: Series-Parallel Circuit

Calculate the total resistance and current in this circuit.

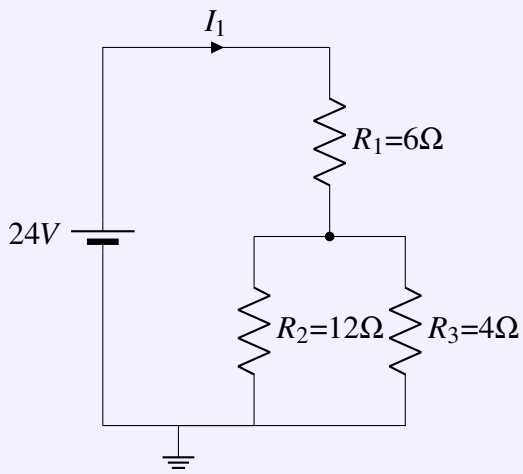

Solution

The solution proceeds step by step.
1. Identify that R_2 and R_3 are in parallel: $R_{parallel} = \frac{R_2 \cdot R_3}{R_2+R_3} = \frac{12 \cdot 4}{12+4} = \frac{48}{16} = 3\,\Omega$
2. The parallel combination of R_2 and R_3 is in series with R_1: $R_{total} = R_1 + R_{parallel} = 6\,\Omega + 3\,\Omega = 9\,\Omega$
3. Calculate the total current: $I_1 = \frac{V}{R_{total}} = \frac{24}{9} = 2.67\,\text{A}$
4. The voltage across the parallel combination is: $V_{parallel} = I_1 \cdot R_{parallel} = 2.67 \cdot 3 = 8\,\text{V}$
5. The currents through each resistor in the parallel combination are: $I_2 = \frac{V_{parallel}}{R_2} = \frac{8}{12} = 0.67\,\text{A}$ $I_3 = \frac{V_{parallel}}{R_3} = \frac{8}{4} = 2\,\text{A}$
6. Verification using KCL: $I_1 = I_2 + I_3 = 0.67\,\text{A} + 2\,\text{A} = 2.67\,\text{A}$

3.3.6 Additional Resources

For more information on series and parallel circuits, check out these resources:

- Series and parallel circuits (Wikipedia)
- Resistors in Series (Khan Academy)
- Resistors in Parallel (Khan Academy)

3.4 Voltage Divider

Podcast: Voltage Divider

A voltage divider is a simple yet fundamental circuit configuration that produces a fraction of a source voltage. It consists of two or more resistors connected in series across a voltage source, with an output taken across one of the resistors.

3.4.1 Basic Voltage Divider Principle

Consider the basic voltage divider circuit shown in Figure 3.8, consisting of two resistors R_1 and R_2 connected in series across a voltage source V.

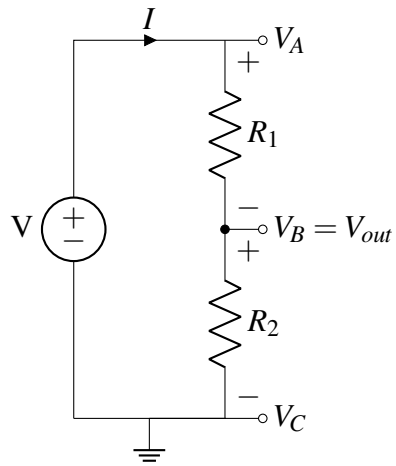

Figure 3.8: A basic voltage divider circuit. The output voltage V_B is taken across resistor R_2.

In this circuit:

- V is the input voltage (from the source)
- V_A is the voltage at the top node
- V_B is the voltage at the middle node (the output)
- V_C is the voltage at the bottom node (ground, 0 V)

3.4.2 Deriving the Voltage Divider Formula

To find the output voltage V_B, apply Ohm's Law and the principles of series circuits:

- The same current I flows through both resistors.
- Using Ohm's Law, the voltage across R_2 is $V_B = I \times R_2$.
- The total voltage V equals the sum of voltages across both resistors: $V = I \times (R_1 + R_2)$.
- Therefore, $I = \frac{V}{R_1+R_2}$.

- Substituting into the expression for V_B:

$$V_B = I \times R_2 = \frac{V}{R_1 + R_2} \times R_2 = V \times \frac{R_2}{R_1 + R_2} \tag{3.23}$$

This gives the voltage divider formula:

$$V_{out} = V_{in} \times \frac{R_2}{R_1 + R_2} \tag{3.24}$$

Example 12: Basic Voltage Divider

Calculate the output voltage V_B in a voltage divider with $V = 12\,\text{V}$, $R_1 = 4.7\,\text{k}\Omega$, and $R_2 = 3.3\,\text{k}\Omega$.

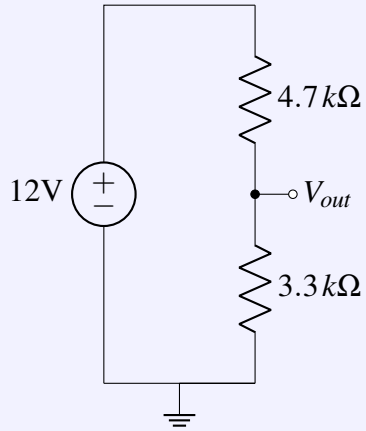

Solution

Using the voltage divider formula:

$$\begin{aligned} V_B &= V \times \frac{R_2}{R_1 + R_2} && (3.25)\\ &= 12 \times \frac{3.3 \times 10^3}{4.7 \times 10^3 + 3.3 \times 10^3} && (3.26)\\ &= 12\,\text{V} \times \frac{3.3}{8} && (3.27)\\ &= 12\,\text{V} \times 0.4125 && (3.28)\\ &= 4.95\,\text{V} && (3.29) \end{aligned}$$

The output voltage V_B is 4.95 V.

3.4.3 Applications of Voltage Dividers

Voltage dividers have numerous practical applications:

- **Level shifting:** Converting between different voltage levels in a circuit
- **Biasing:** Setting a specific operating point for transistors and other components
- **Reference voltages:** Creating stable reference voltages for comparators and operational amplifiers

- **Sensor interfaces:** Converting sensor resistance changes to voltage changes (for example, with thermistors or photoresistors)

- **Potentiometers:** Variable voltage dividers used for volume controls, dimmer switches, and similar applications

- **Measurement:** Reducing high voltages to measurable levels for instrumentation

3.4.4 Limitations and Loading Effects

The voltage divider formula assumes that no current is drawn from the output node. In practice, if a load is connected to the output, it will draw current and change the voltage division ratio. This is known as loading.

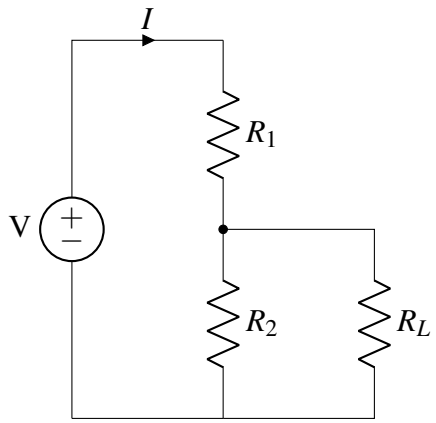

Figure 3.9: A voltage divider with a load resistor R_L.

When a load resistor R_L is connected to the output, it forms a parallel combination with R_2. The effective resistance becomes:

$$R_{2,eff} = \frac{R_2 \times R_L}{R_2 + R_L} \tag{3.30}$$

The modified output voltage becomes:

$$V_{out} = V_{in} \times \frac{R_{2,eff}}{R_1 + R_{2,eff}} = V_{in} \times \frac{\frac{R_2 \times R_L}{R_2 + R_L}}{R_1 + \frac{R_2 \times R_L}{R_2 + R_L}} \tag{3.31}$$

This can be simplified to:

$$V_{out} = V_{in} \times \frac{R_2 \times R_L}{R_1(R_2 + R_L) + R_2 \times R_L} \tag{3.32}$$

Example 13: Voltage Divider with Load

For a voltage divider with $V = 12\,\text{V}$, $R_1 = 10\,\text{k}\Omega$, and $R_2 = 10\,\text{k}\Omega$, calculate the output voltage when: a) No load is connected ($R_L = \infty$) b) A $R_L = 10\,\text{k}\Omega$ load resistor is connected c) A $R_L = 1\,\text{k}\Omega$ load resistor is connected

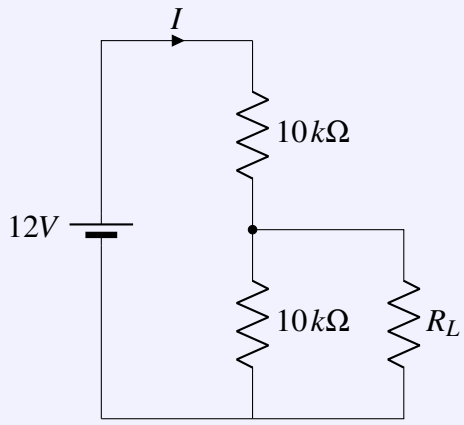

Solution

a) Without load:

$$V_{out} = V_{in} \times \frac{R_2}{R_1 + R_2} = 12 \times \frac{10}{10+10} = 6\,\text{V} \tag{3.33}$$

b) With $R_L = 10\,\text{k}\Omega$:

$$R_{2,eff} = \frac{R_2 \times R_L}{R_2 + R_L} = \frac{10 \times 10}{10+10} = 5\,\text{k}\Omega \tag{3.34}$$

$$V_{out} = V_{in} \times \frac{R_{2,eff}}{R_1 + R_{2,eff}} = 12 \times \frac{5}{10+5} = 4\,\text{V} \tag{3.35}$$

c) With $R_L = 1\,\text{k}\Omega$:

$$R_{2,eff} = \frac{R_2 \times R_L}{R_2 + R_L} = \frac{10 \times 1}{10+1} \approx 0.909\,\text{k}\Omega \tag{3.36}$$

$$V_{out} = V_{in} \times \frac{R_{2,eff}}{R_1 + R_{2,eff}} = 12 \times \frac{0.909}{10+0.909} \approx 1\,\text{V} \tag{3.37}$$

A load reduces the output voltage; the lower the load resistance, the greater the reduction.

3.4.5 Practical Design Considerations

When designing voltage dividers for practical applications, consider the following:

- **Loading effects:** Choose R_1 and R_2 values small enough that loading effects are minimized, but large enough to minimize power consumption.
- **Power rating:** Ensure resistors can handle the power dissipation: $P_1 = \frac{V^2 \times R_1}{(R_1+R_2)^2}$ and $P_2 = \frac{V^2 \times R_2}{(R_1+R_2)^2}$. See Example 7 for a worked verification.

- **Tolerance:** Consider the effect of resistor tolerance on the accuracy of the output voltage.
- **Buffer circuits:** For sensitive applications, use a buffer amplifier (such as a voltage follower, covered later) to minimize loading effects.

3.4.6 Additional Resources

For more information on voltage dividers, check out these resources:

- Voltage Divider (Wikipedia)
- Voltage Divider (Khan Academy)

3.5 Simplification of Resistor Circuits

Podcast: Circuit Simplification Techniques

While Kirchhoff's Laws provide a systematic approach to solving any resistive circuit, they often lead to multiple simultaneous equations that can be tedious to solve. For many circuits, simplification techniques based on series and parallel connections and voltage divider principles yield solutions more efficiently.

3.5.1 The Simplification Approach

The general approach to circuit simplification involves:

1. Identifying series and parallel combinations of resistors

2. Replacing these combinations with their equivalent resistances

3. Applying voltage divider or current divider principles

4. Working backward to find the values in the original circuit

The following examples apply this approach.

Example 14: Simplifying a Parallel Current Source Circuit

Revisiting Example 3.1.2, find currents I_1 and I_2 using circuit simplification techniques.

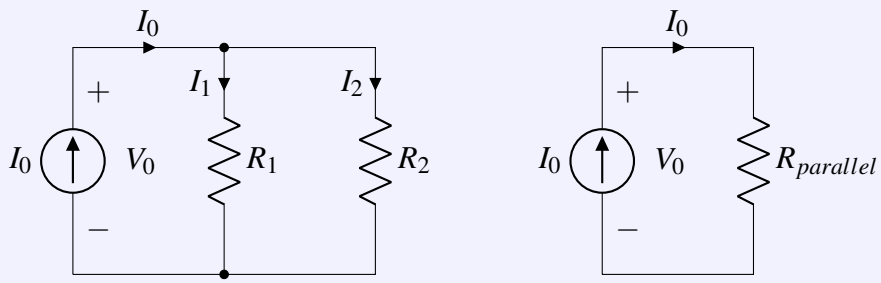

Solution

The solution proceeds as follows.
1. Calculate the equivalent parallel resistance of R_1 and R_2:

$$R_{parallel} = \frac{R_1 \times R_2}{R_1 + R_2} = \frac{3 \times 4}{3+4} = \frac{12}{7} \approx 1.714\,\Omega \tag{3.38}$$

2. Find the voltage across the parallel combination (which is also the voltage across each individual resistor):

$$V_0 = I_0 \times R_{parallel} = 2 \times 1.714 \approx 3.429\,\text{V} \tag{3.39}$$

3. Calculate the current through each resistor using Ohm's Law:

$$I_1 = \frac{V_0}{R_1} = \frac{3.429}{3} \approx 1.143\,\text{A} \tag{3.40}$$

$$I_2 = \frac{V_0}{R_2} = \frac{3.429}{4} \approx 0.857\,\text{A} \tag{3.41}$$

4. Verification using KCL:

$$I_0 = I_1 + I_2 = 1.143\,\text{A} + 0.857\,\text{A} = 2\,\text{A}\checkmark \tag{3.42}$$

This approach is more direct than setting up simultaneous equations, particularly for circuits with clear series or parallel structures.

Example 15: Simplifying a Circuit with Two Voltage Sources

Revisiting Example 3.1.4, find the current I in this circuit with two voltage sources and two resistors. The circuit has already been shown to simplify to:

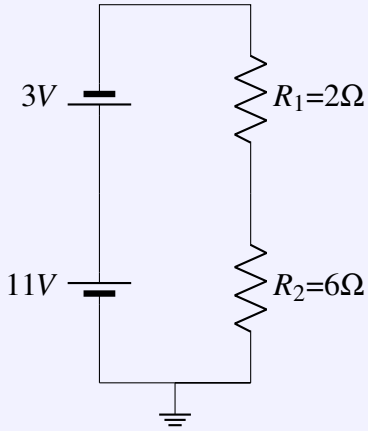

Solution

1. The resistors are in series, so the total resistance is:

$$R_{series} = R_1 + R_2 = 2\,\Omega + 6\,\Omega = 8\,\Omega \tag{3.43}$$

2. The voltage sources oppose each other. Moving clockwise around the loop, the 11 V source increases potential while the 3 V source decreases potential. The effective voltage is:

$$V_{series} = 11 - 3 = 8\,\text{V} \tag{3.44}$$

3. Applying Ohm's Law to find the current:

$$I = \frac{V_{series}}{R_{series}} = \frac{8}{8} = 1\,\text{A} \tag{3.45}$$

The two voltage sources combine into one equivalent source, and the two resistors combine into one equivalent resistance.

Example 16: Series-Parallel Simplification

Revisiting Example 3.3.5, consider a circuit with a 24 V battery, a series resistor $R_1 = 6\,\Omega$, and two parallel resistors $R_2 = 12\,\Omega$ and $R_3 = 4\,\Omega$. Calculate all currents in the circuit.

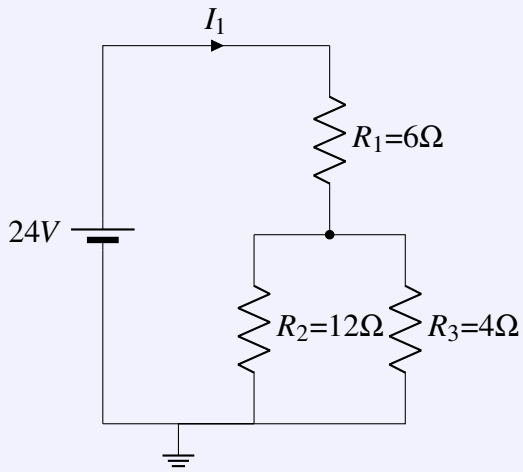

Solution

1. Calculate the equivalent resistance of the parallel combination:

$$\frac{1}{R_{parallel}} = \frac{1}{R_2} + \frac{1}{R_3} = \frac{1}{12} + \frac{1}{4} = \frac{1+3}{12} = \frac{4}{12} = \frac{1}{3} \tag{3.46}$$

$$R_{parallel} = 3\,\Omega \tag{3.47}$$

2. The total resistance in the circuit is:

$$R_{total} = R_1 + R_{parallel} = 6\,\Omega + 3\,\Omega = 9\,\Omega \tag{3.48}$$

3. Calculate the main current:

$$I_1 = \frac{V}{R_{total}} = \frac{12}{9} = 1.33\,\text{A} \tag{3.49}$$

4. Find the voltage across the parallel combination:

$$V_{parallel} = I_1 \times R_{parallel} = 1.33 \times 3 = 4\,\text{V} \tag{3.50}$$

(Alternatively, the voltage divider formula gives: $V_{parallel} = 12\,\text{V} \times \frac{3}{9} = 4\,\text{V}$)

5. Calculate the individual currents through the parallel resistors:

$$I_2 = \frac{V_{parallel}}{R_2} = \frac{4}{12} = 0.33\,\text{A} \tag{3.51}$$

$$I_3 = \frac{V_{parallel}}{R_3} = \frac{4}{4} = 1\,\text{A} \tag{3.52}$$

6. Verification using KCL:

$$I_1 = I_2 + I_3 = 0.33\,\text{A} + 1\,\text{A} = 1.33\,\text{A}\checkmark \tag{3.53}$$

Example 17: Analyzing a More Complex Circuit

Consider this circuit with multiple resistors. Find the current through each resistor.

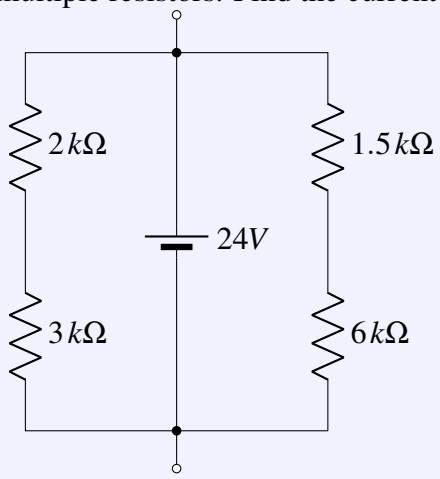

Solution

This circuit has both parallel and series components.

1. Calculate series combinations: $R_{left} = 2+3 = 5\,k\Omega$ and $R_{right} = 1.5+6 = 7.5\,k\Omega$

2. Calculate equivalent parallel resistance: $R_{equiv} = \frac{R_{left} \times R_{right}}{R_{left}+R_{right}} = \frac{5\times 7.5}{12.5} = 3\,k\Omega$

3. Calculate currents:

- Total current: $I_{total} = \frac{V}{R_{equiv}} = \frac{24}{3\times 10^3} = 8\,\text{mA}$
- Left branch: $I_{left} = I_{total} \times \frac{R_{right}}{R_{left}+R_{right}} = 8\,\text{mA} \times \frac{7.5}{12.5} = 4.8\,\text{mA}$
- Right branch: $I_{right} = I_{total} \times \frac{R_{left}}{R_{left}+R_{right}} = 8\,\text{mA} \times \frac{5}{12.5} = 3.2\,\text{mA}$

4. Individual resistor currents:

- $2\,k\Omega$ and $3\,k\Omega$ resistors: $I_{left} = 4.8\,\text{mA}$
- $1.5\,k\Omega$ and $6\,k\Omega$ resistors: $I_{right} = 3.2\,\text{mA}$

5. Verification using KCL: $I_{total} = I_{left} + I_{right} = 4.8\,\text{mA} + 3.2\,\text{mA} = 8\,\text{mA}$ ✓

3.5.2 General Strategy for Circuit Analysis

Based on the examples above, here is a general strategy for analyzing DC resistive circuits:

- Identify the circuit structure: look for series and parallel connections.
- Simplify the circuit: replace series and parallel combinations with their equivalent resistances until the circuit reduces to a simple form.
- Calculate key parameters: find the total current or voltage in the simplified circuit.
- Work backward: use voltage divider or current divider principles to find voltages and currents in the original components.

- Verify the results: use Kirchhoff's Laws to confirm that the solution satisfies both KCL and KVL.

This approach is often faster and less error-prone than setting up and solving multiple simultaneous equations, particularly for circuits with clear series and parallel structures.

3.5.3 Limitations of the Simplification Approach

While circuit simplification is powerful, it has some limitations:

- Not all circuits can be reduced to simple series-parallel combinations
- Circuits with multiple voltage or current sources may require more sophisticated techniques
- For circuits with many components arranged in complex networks, techniques like node analysis or mesh analysis may be more appropriate

For most practical circuits encountered in introductory courses, however, the simplification approach provides a direct and intuitive method for analysis.

3.6 Measurement Instruments and Practical Considerations

Podcast: Measurement and Practical Considerations

When analyzing circuits on paper, we work with ideal components and perfect measurements. In real-world applications, however, measuring instruments interact with the circuits they measure, and components like batteries have limitations. Understanding these practical considerations is essential for successful circuit design and testing.

3.6.1 Oscilloscopes and Voltmeters

An oscilloscope is an electronic instrument that visually displays how voltage changes over time, while a voltmeter measures the potential difference (voltage) between two points in a circuit. Both instruments are essential tools for circuit analysis and troubleshooting.

Internal Resistance

A key characteristic of any voltage measuring instrument is its internal resistance. Ideally, this resistance should be infinitely large to avoid disturbing the circuit being measured.

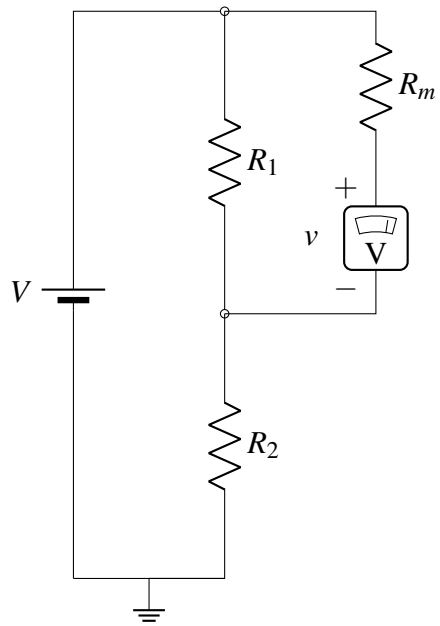

Figure 3.10: A voltmeter with internal resistance R_m measuring the voltage across resistor R_1 in a voltage divider circuit.

When a voltmeter or oscilloscope is connected to measure voltage, it is placed in parallel with the component being measured. The internal resistance of the instrument forms a parallel combination with the component, altering the effective resistance and potentially changing the voltage being measured.

For example, the ADALM2000's oscilloscope and voltmeter have an internal resistance of approximately 1 MΩ. This becomes significant when measuring across high-value resistors.

Example 18: Loading Effect of a Voltmeter

Consider a voltage divider with $R_1 = 10\,\text{k}\Omega$ and $R_2 = 90\,\text{k}\Omega$ connected to a 10 V source. Calculate the voltage across R_2 both with and without a voltmeter (with 1 MΩ internal resistance) connected for measurement.

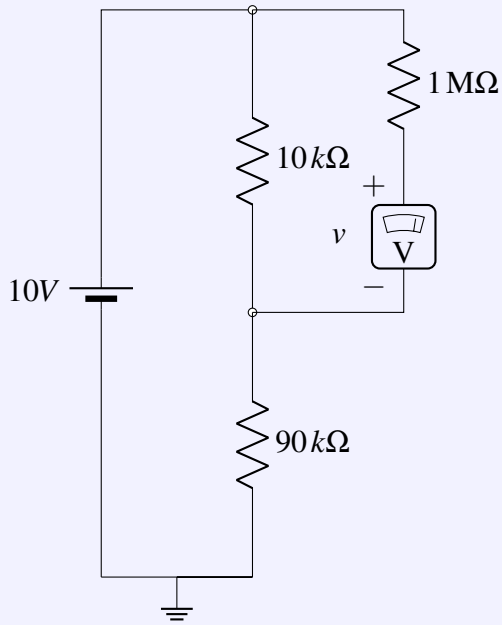

Solution

Without the voltmeter:

$$V_{R_2} = V_{source} \times \frac{R_2}{R_1 + R_2} = 10\,\text{V} \times \frac{90}{10+90} = 10\,\text{V} \times 0.9 = 9\,\text{V} \tag{3.54}$$

With the voltmeter, the effective resistance across R_2 becomes the parallel combination of R_2 and R_m:

$$R_{parallel} = \frac{R_2 \times R_m}{R_2 + R_m} = \frac{(90 \times 10^3) \times (1 \times 10^6)}{90 \times 10^3 + 1 \times 10^6} \approx 82.6\,\text{k}\Omega \tag{3.55}$$

The voltage divider equation now gives:

$$V_{measured} = 10\,\text{V} \times \frac{R_{parallel}}{R_1 + R_{parallel}} = 10\,\text{V} \times \frac{82.6}{10+82.6} \approx 8.92\,\text{V} \tag{3.56}$$

The voltmeter reads approximately 8.92 V, about 0.08 V (0.9%) less than the actual voltage. While this error is small here, it becomes more significant when measuring across higher-value resistors.

Note

As a rule of thumb, voltmeter measurements are accurate to within 1% when the resistance being measured is at least 100 times smaller than the internal resistance of the voltmeter. For the ADALM2000 with 1 MΩ internal resistance, measurements across resistors up to about 10 kΩ will be reasonably accurate.

3.6.2 Signal Generators

A signal generator produces electrical signals with controllable frequency and amplitude for testing circuit behavior. Like any real source, it has an internal resistance, known as its output impedance, which forms a voltage divider with any load connected to it. The ADALM2000 signal generator has an output impedance of approximately 50 Ω. When the load resistance is large compared to 50 Ω, the loading effect is negligible and the output voltage is close to the set value. When the load resistance is comparable to 50 Ω, a significant fraction of the set voltage drops across the internal impedance and the load receives less than expected. The full treatment of signal generators, including periodic waveforms, frequency, and amplitude, is covered in the Signals chapter.

3.6.3 Real Batteries

Real batteries have been treated as ideal voltage sources throughout this chapter, but real batteries have an internal resistance that affects their performance, particularly under load.

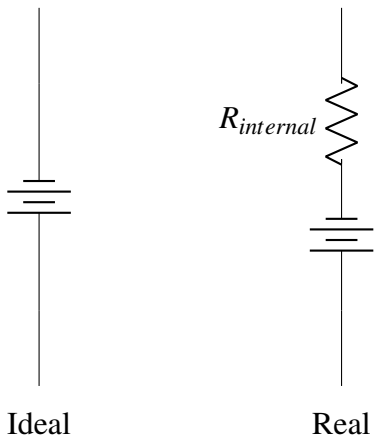

Figure 3.11: Comparison of an ideal battery (left) and a real battery modeled with internal resistance (right).

The internal resistance of a battery causes its terminal voltage to drop when current is drawn:

$$V_{terminal} = V_{nominal} - I \times R_{internal} \tag{3.57}$$

Different batteries have different internal resistances:

- Car batteries: very low internal resistance (less than 10 mΩ), capable of delivering high currents
- 9 V batteries: higher internal resistance (approximately 100 Ω), limited current capability

- Rechargeable batteries: internal resistance increases with age and use

Example 19: Battery Performance Under Load

A 12 V car battery with an internal resistance of 5 mΩ is used to start a car, drawing 200 A. Calculate the terminal voltage during starting.

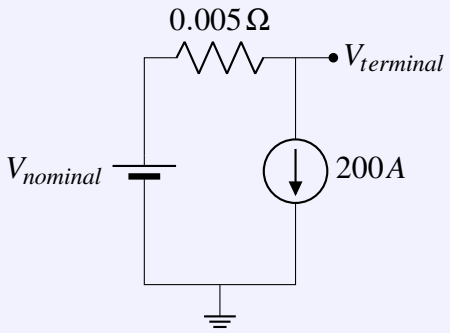

Solution

$$V_{terminal} = V_{nominal} - I \times R_{internal} \tag{3.58}$$
$$= 12 - 200 \times 0.005 \tag{3.59}$$
$$= 11\,\text{V} \tag{3.60}$$

Despite the high current draw, the voltage drops by only 1 V due to the battery's low internal resistance.
In contrast, a 9 V battery with 100 Ω internal resistance cannot deliver anywhere near this current. The maximum current it can supply is limited by its own internal resistance:

$$I_{max} = \frac{V_{nominal}}{R_{internal}} = \frac{9}{100} = 0.09\,\text{A} \tag{3.61}$$

A 9 V battery cannot start a car because it can only supply approximately 90 mA.

3.6.4 Practical Considerations for Circuit Design

When designing and analyzing real circuits, keep these practical considerations in mind:

- **Measurement loading:** Choose measuring instruments with sufficiently high input impedance relative to the circuit being measured.
- **Source loading:** Account for the output impedance of signal sources when precise amplitudes are needed.
- **Battery limitations:** Consider both the voltage and internal resistance when selecting power sources for a given application.
- **Component tolerances:** Real components have variations from their nominal values, typically $\pm 1\%$, $\pm 5\%$, or $\pm 10\%$ for resistors.
- **Temperature effects:** Component values can change with temperature, particularly for resistors and semiconductors.
- **Power ratings:** Ensure components can handle the power they will dissipate ($P = I^2R = \frac{V^2}{R}$).

Understanding these practical aspects helps bridge the gap between theoretical circuit analysis and real-world implementation, leading to more successful designs and more accurate measurements.

Chapter Summary

This chapter introduced the fundamental principles for analyzing direct current (DC) circuits. We explored Kirchhoff's Current Law (KCL) and Kirchhoff's Voltage Law (KVL), which are based on the conservation of charge and energy, respectively. We calculated power in DC circuits and verified that total power supplied equals total power absorbed. We examined how resistors behave when connected in series and parallel, and how to use voltage divider principles to determine voltages at different points in a circuit. We also discussed circuit simplification techniques that combine these concepts to solve complex problems more efficiently. Finally, we considered how measurement instruments like oscilloscopes and voltmeters interact with circuits, and how batteries behave in real-world applications. These fundamental concepts and techniques provide the foundation for analyzing and designing more complex electrical systems in future chapters.

Chapter 4

The I-V Menagerie

Podcast: I-V Relationships

Kirchhoff's Laws provide the analytical framework for circuit analysis, but they describe only the relationships among voltages and currents at the network level. To fully determine circuit behavior, those laws must be paired with the characteristic relationship between voltage and current for each individual component. This chapter introduces that component-level perspective through the concept of the I-V curve, then examines four fundamental components: the ideal voltage source, the ideal current source, the ideal resistor, and the ideal diode.

4.1 Understanding I-V Curves

An I-V curve is a graph that plots current (I) on the vertical axis against voltage (V) on the horizontal axis for a specific component. By convention, the reference current arrow points *into* the positive terminal of the device, as shown in Figure 4.1. This is called the **passive sign convention** and is the standard reference direction used for components whose primary role is to absorb energy.

Reading an I-V curve. Every point on an I-V curve represents one possible operating condition for the component. To interpret any such point, read off the corresponding voltage V and current I, then compute the power $P = VI$. If $P > 0$, the component is absorbing energy at that operating point. If $P < 0$, the component is supplying energy. The sign of P is determined entirely by the signs of V and I, which is why the I-V plane divides naturally into four quadrants, as shown in Figure 4.1.

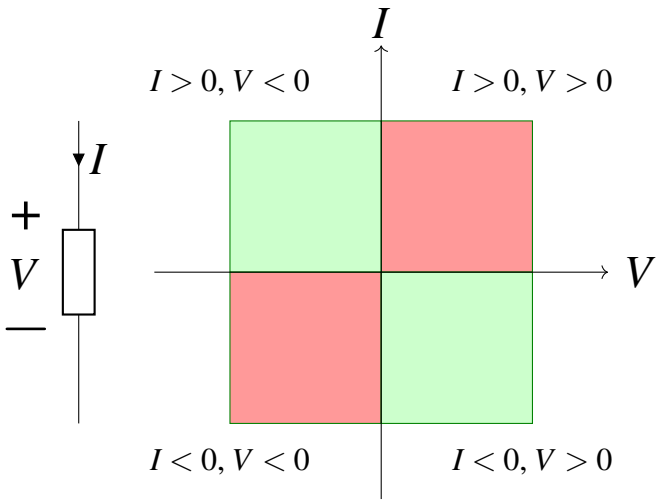

Figure 4.1: The I-V plane with the passive sign convention reference: current I is defined as flowing into the positive terminal. Red quadrants (Q1 and Q3) have $P = VI > 0$: the device absorbs power. Green quadrants (Q2 and Q4) have $P = VI < 0$: the device supplies power. A purely passive device, such as a resistor, can only ever operate in the red quadrants.

Caution

The passive sign convention reference direction shown in Figure 4.1 is used throughout this chapter for the resistor and diode. For the voltage source and current source, the current reference is defined as flowing *out of* the positive terminal, which is the natural direction of conventional current for a source. The quadrant coloring is therefore not applied to the source figures; instead, the operating regions are labeled directly on the I-V curve to avoid ambiguity.

The four sections that follow examine the I-V relationships of the fundamental circuit components encountered in this course.

4.2 Ideal Voltage Source

An ideal voltage source maintains a constant voltage across its terminals regardless of the current flowing through it. This behavior produces a vertical line on the I-V plane at $V = V_1$: the voltage is fixed, while the current can take any value determined by the rest of the circuit.

Conventional current flows *out of* the positive terminal of a source. With this reference direction, when current is positive the source is doing work on the circuit (delivering power), and when current is negative the circuit is doing work on the source (for example, charging a battery).

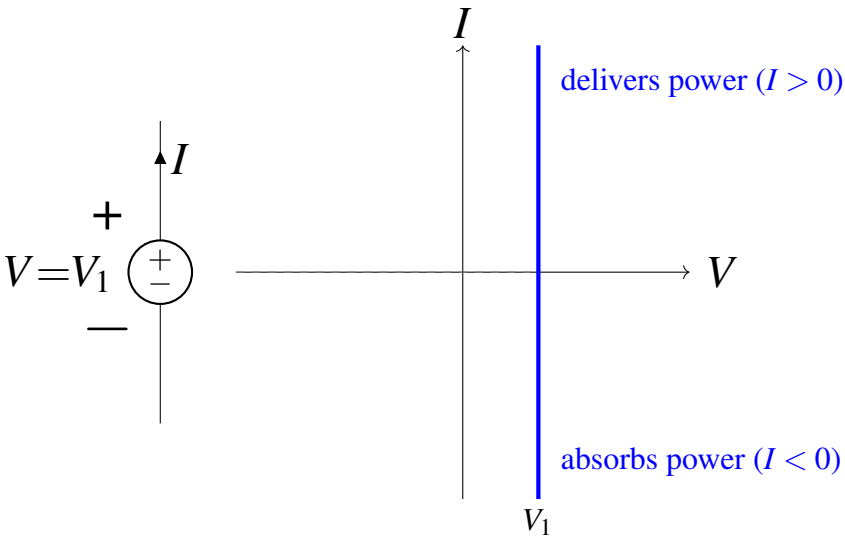

Figure 4.2: I-V curve of an ideal voltage source (current reference out of positive terminal). The voltage is fixed at V_1 for any current. The upper half of the line corresponds to normal source operation (power delivery); the lower half corresponds to power absorption, as occurs when a battery is being charged.

The defining equation for an ideal voltage source is:

$$V = V_1 \qquad \text{(constant)} \tag{4.1}$$

Example 1: Ideal Voltage Source

An ideal 12 V voltage source is connected to a 6 Ω resistor. Calculate the current I_0 and the power delivered by the source.

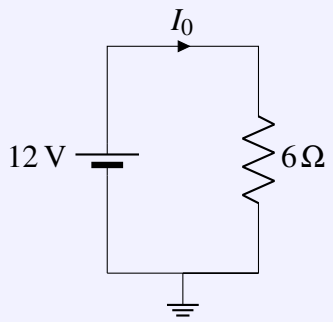

Solution

By Ohm's Law, the current through the resistor is:

$$I_0 = \frac{12}{6} = 2\,\text{A}$$

The power delivered by the voltage source is:

$$P = V \cdot I_0 = 12 \times 2 = 24\,\text{W}$$

Current flows out of the positive terminal, so $I_0 > 0$ and the source is operating in the power-delivery region of its I-V curve.

4.3 Ideal Current Source

An ideal current source maintains a constant current through it regardless of the voltage across its terminals. This behavior produces a horizontal line on the I-V plane at $I = I_1$: the current is fixed, while the voltage can take any value determined by the rest of the circuit.

As with the voltage source, the current reference is defined as flowing out of the positive terminal. The power delivered by the source therefore depends on the sign of the terminal voltage: when $V > 0$ the source delivers power to the circuit, and when $V < 0$ the circuit drives energy back into the source.

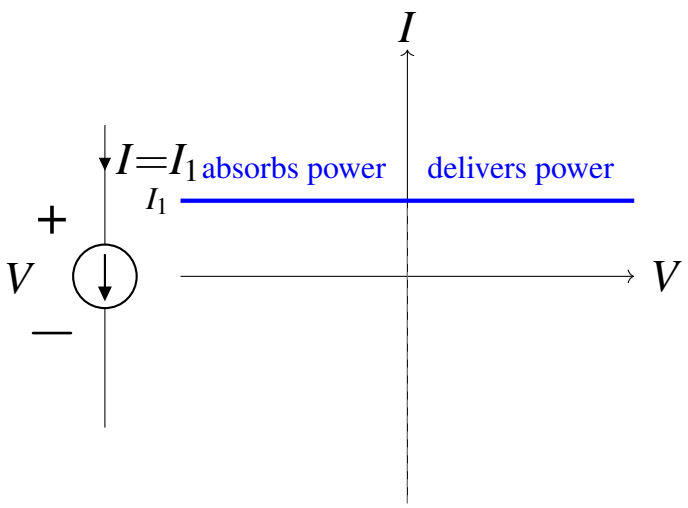

Figure 4.3: I-V curve of an ideal current source (current reference out of positive terminal). The current is fixed at I_1 for any terminal voltage. When $V > 0$ the source delivers power to the circuit (right half of line); when $V < 0$ it absorbs power (left half).

The defining equation for an ideal current source is:

$$I = I_1 \qquad \text{(constant)} \tag{4.2}$$

Example 2: Ideal Current Source

An ideal 3 A current source is connected to a 4 Ω resistor. Calculate the voltage across the resistor and the power delivered by the source.

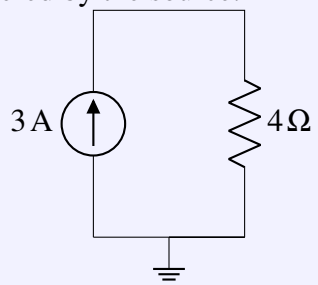

Solution

The voltage across the resistor equals the terminal voltage of the current source. By Ohm's Law:

$$V = I_1 \cdot R = 3 \times 4 = 12\,\text{V}$$

The power delivered by the current source is:

$$P = V \cdot I_1 = 12 \times 3 = 36\,\text{W}$$

The terminal voltage is positive ($V > 0$), so the current source is operating in the power-delivery region of its I-V curve.

4.4 Ideal Resistor

An ideal resistor obeys Ohm's Law: the voltage across the resistor is directly proportional to the current through it, with resistance R (measured in ohms, Ω) as the constant of proportionality. On the I-V plane, this relationship appears as a straight line through the origin with slope $\frac{1}{R}$.

The passive sign convention applies here: current is referenced as flowing into the positive terminal. The I-V line therefore passes through Q1 ($I > 0$, $V > 0$) and Q3 ($I < 0$, $V < 0$), both of which are red (absorbing) quadrants. The resistor never reaches Q2 or Q4, confirming that it cannot supply power.

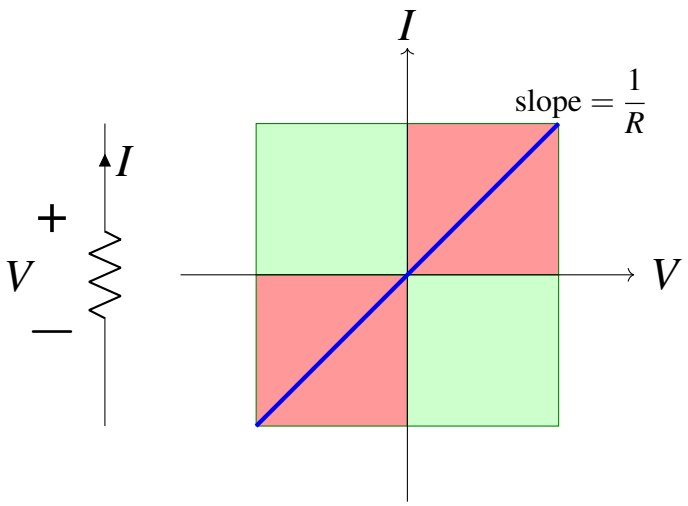

Figure 4.4: I-V curve of an ideal resistor (passive sign convention). The I-V line passes through Q1 and Q3 only, both of which are red (power-absorbing) quadrants. The green quadrants are inaccessible: a resistor always dissipates energy, regardless of current direction.

Ohm's Law takes the forms:

$$V = IR \qquad \text{or equivalently} \qquad I = \frac{V}{R} \tag{4.3}$$

Several key properties follow directly from the I-V curve. The line passes through the origin: zero voltage produces zero current. The slope equals $\frac{1}{R}$, so a larger resistance gives a shallower slope and less current for the same applied voltage. Because I and V always share the same sign along this line, $P = VI$ is always non-negative: a resistor converts electrical energy to heat in every operating condition and never returns energy to the circuit.

Example 3: Ideal Resistor Behavior

For a $100\,\Omega$ resistor, calculate the current and power when the applied voltage is: (a) $5\,\text{V}$, (b) $-3\,\text{V}$, and (c) $0\,\text{V}$.

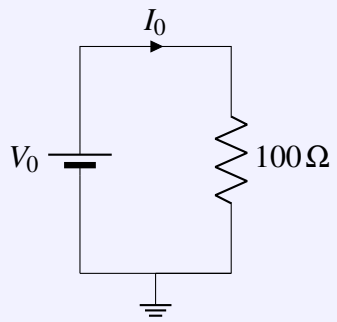

Solution

(a) $V_0 = 5\,\mathbf{V}$ (operating in Q1):

$$I_0 = \frac{5}{100} = 0.05\,\text{A} = 50\,\text{mA} \qquad P = 5 \times 0.05 = 0.25\,\text{W}$$

(b) $V_0 = -3\,\mathbf{V}$ (operating in Q3):

$$I_0 = \frac{-3}{100} = -0.03\,\text{A} = -30\,\text{mA} \qquad P = (-3) \times (-0.03) = 0.09\,\text{W}$$

Although both V and I are negative, the power is positive. Reversing the voltage simply reverses the current; the resistor still dissipates energy. This is the Q3 red quadrant in action.

(c) $V_0 = 0\,\mathbf{V}$ (at the origin):

$$I_0 = 0\,\text{A} \qquad P = 0\,\text{W}$$

With no applied voltage there is no current and no dissipation, consistent with the I-V line passing through the origin.

4.5 Ideal Diode

Unlike the resistor, which has a linear I-V relationship, the diode has a nonlinear characteristic. An ideal diode acts as a one-way valve for current: it conducts perfectly when forward-biased (positive anode-to-cathode voltage) and blocks completely when reverse-biased (negative anode-to-cathode voltage). The schematic symbol for the diode points in the direction of conventional current flow, providing a visual reminder of this directionality.

The passive sign convention applies here, with the current reference into the positive (anode) terminal.

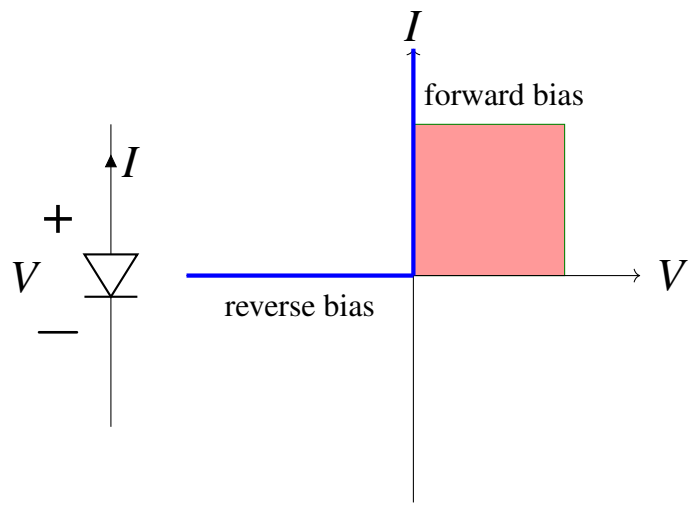

Figure 4.5: I-V curve of an ideal diode (passive sign convention). In reverse bias ($V < 0$) the diode blocks all current: the operating point sits on the negative V-axis. In forward bias the diode voltage is zero and the operating point rises along the I-axis; the circuit determines the current. Only Q1 is shaded because the ideal diode operates exclusively there during conduction.

The right-angle shape of the ideal I-V curve is the graphical expression of the diode's switching behavior: the diode is either fully off (operating on the V-axis) or fully on (operating on the I-axis), with no gradual transition. This ideal behavior is captured mathematically as:

$$V = \begin{cases} \text{any value} \leq 0, & I = 0 \quad \text{(reverse bias, blocking)} \\ 0, & I > 0 \quad \text{(forward bias, conducting)} \end{cases} \tag{4.4}$$

Real silicon diodes deviate from the ideal model in two important ways. First, a forward voltage drop of approximately 0.6–0.7 V is required before the diode conducts significantly; the turn-on is not instantaneous at $V = 0$. Second, a small reverse leakage current flows even when the diode is nominally blocking, placing the real device slightly into Q3 rather than exactly on the V-axis. Figure 4.6 compares both characteristics.

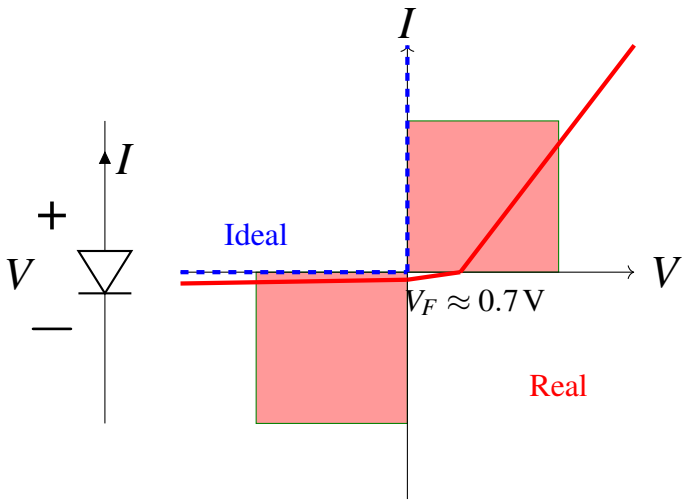

Figure 4.6: Comparison of ideal (dashed blue) and real (solid red) diode I-V characteristics. The ideal diode has a sharp corner at the origin: zero current in reverse bias, zero voltage in forward bias. The real diode requires a forward voltage $V_F \approx 0.7\,\mathrm{V}$ before conducting significantly, and exhibits a small reverse leakage current (Q3, red). The ideal diode has no leakage and therefore never enters Q3.

Example 4: Ideal Diode in a Circuit

An ideal diode is connected in series with a 2 kΩ resistor and a 9 V battery. Calculate the current and the voltage across each component for (a) the diode connected in forward bias and (b) the diode reversed.

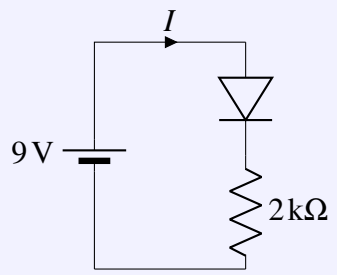

Solution

(a) Forward bias: The diode anode connects to the positive battery terminal. An ideal forward-biased diode acts as a short circuit: it carries any current with zero voltage across it.

$$V_{\text{diode}} = 0\,\text{V}$$

The full battery voltage appears across the resistor:

$$V_{\text{resistor}} = 9 - 0 = 9\,\text{V}$$

The circuit current is:

$$I = \frac{9}{2000} = 4.5\,\text{mA}$$

(b) Reverse bias: With the diode reversed, it acts as an open circuit and blocks all current:

$$I = 0\,\text{A}$$

No current flows, so no voltage drop appears across the resistor. The entire battery voltage appears in reverse across the diode:

$$V_{\text{resistor}} = 0\,\text{V} \qquad V_{\text{diode}} = -9\,\text{V}$$

Note that the full supply voltage is borne by the diode in this case. For a real diode, the reverse breakdown voltage is a critical specification that must not be exceeded.

4.6 Comparing I-V Relationships

Figure 4.7 places all four ideal I-V curves on the same axes. The shape of each curve is a direct graphical expression of what the component controls.

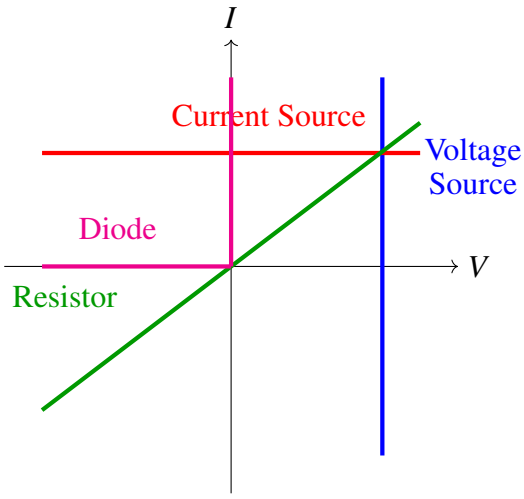

Figure 4.7: I-V characteristics of the four fundamental components on a common set of axes. The shape of each curve encodes the component behavior: a vertical line for the voltage source (fixed V), a horizontal line for the current source (fixed I), a line through the origin for the resistor (proportional V and I), and an L-shape for the ideal diode (unidirectional conduction).

A voltage source fixes V and allows I to be determined by the circuit, producing a vertical line. A current source fixes I and allows V to be determined by the circuit, producing a horizontal line. These two components are duals of each other: each controls one quantity and leaves the other free. A resistor imposes a proportional relationship between the two quantities, producing a line through the origin whose slope encodes the conductance $\frac{1}{R}$. A diode enforces directionality: it operates on the V-axis in reverse bias and on the I-axis in forward bias, producing the characteristic L-shape.

Table 4.1 collects the key properties of each component.

Table 4.1: Summary of I-V characteristics for the four fundamental components.

Component	**Fixed**	**Free**	**I-V shape**	**Power role**
Ideal voltage source	$V = V_1$	I	Vertical line	Source or load
Ideal current source	$I = I_1$	V	Horizontal line	Source or load
Ideal resistor	$V/I = R$	—	Line through origin	Always absorbs
Ideal diode	Direction of I	—	L-shape	Forward only

4.7 Real Components and Non-Ideal Behavior

The ideal models developed in this chapter are indispensable for building intuition and for first-order analysis, but real components deviate from ideal behavior in predictable ways that become apparent during laboratory measurements.

A real voltage source has an internal series resistance that causes its terminal voltage to drop as the load current increases; the I-V curve tilts away from vertical. This effect was examined in Chapter 3 in the context of battery performance. A real current source has a finite parallel resistance that allows the delivered current to vary with terminal voltage; the I-V curve tilts away from horizontal. A real resistor can exhibit nonlinear behavior at extreme voltages or

temperatures, and its tolerance band means the actual resistance differs slightly from its nominal value, as encountered in the Lab 2 measurements. A real diode requires a forward voltage drop of approximately 0.6–0.7 V for silicon devices before significant conduction begins, and it passes a small reverse leakage current when nominally blocking, as shown in Figure 4.6.

Recognizing these deviations is essential for connecting ideal analysis to measured results, and it is a recurring theme throughout the associated laboratory work.

Chapter Summary

This chapter introduced the I-V curve as a graphical tool for characterizing component behavior. Every point on an I-V curve represents one operating condition; the power at that point is $P = VI$. The sign of P depends on the sign convention used: the passive sign convention (current into the positive terminal) applies to passive components such as resistors and diodes, while the active sign convention (current out of the positive terminal) applies to sources.

The I-V curve of an **ideal voltage source** is a vertical line at $V = V_1$: voltage is fixed, current is free. The **ideal current source** produces a horizontal line at $I = I_1$: current is fixed, voltage is free. These two components are duals. The **ideal resistor** produces a straight line through the origin with slope $\frac{1}{R}$; it operates exclusively in the power-absorbing quadrants and never supplies energy. The **ideal diode** produces an L-shaped curve: it conducts with zero voltage drop in forward bias and blocks all current in reverse bias.

Combining these component I-V relationships with Kirchhoff's Laws from Chapter 3 provides a complete toolkit for DC circuit analysis. The following chapters extend these ideas to signals that vary in time and frequency.

Chapter 5

Signals in Time

A signal is a physical quantity that varies with time and carries information. Before asking what frequencies are present in a signal, the first question to answer is: what does it look like, and how do we describe it precisely? This chapter builds the vocabulary and tools for answering that question. It introduces analog and digital signals, develops the harmonic signal as the fundamental building block of periodic waveforms, and gives careful attention to the concept of phase, including what it means for one signal to lead or lag another. The chapter closes with sampling and the Nyquist criterion, which govern how analog signals are converted to the discrete form that computers and digital systems require.

Learning Objectives:

- Distinguish between analog and digital signals and describe their key characteristics.
- Identify the four parameters of a harmonic signal: amplitude, frequency, period, and phase.
- Calculate peak, peak-to-peak, and RMS amplitude for a sinusoidal signal.
- Determine whether one sinusoidal signal leads or lags another, and express the phase difference in radians and degrees.
- Recognize square, sawtooth, and triangle waveforms and describe their defining features.
- State the Nyquist sampling criterion and apply it to determine a sufficient sampling rate.
- Explain what aliasing is and why anti-aliasing filters are necessary before analog-to-digital conversion.

5.1 What Is a Signal?

In electrical and computer engineering, a *signal* is a time-varying physical quantity that conveys information. Signals take many forms. Acoustic pressure waves carry speech and music. Mechanical vibration carries information about rotating machinery. Electromagnetic fields carry radio, radar, and optical communications over distances ranging from millimeters to billions of kilometers. Voltages and currents in circuits carry information between components on a printed circuit board and between instruments in a laboratory.

All of these are signals, and the mathematical tools developed in this chapter apply to all of them equally. The focus here is on voltage and current signals, because these are the quantities that circuits process directly and that the laboratory instruments in this course, including the oscilloscope and the M2K, measure. Understanding how to describe and analyze a voltage signal in the time domain transfers immediately to any other signal type.

Signals arise throughout engineering practice. A microphone converts the pressure variations of a speaker's voice into a voltage that follows the same time variation. An electrocardiogram (ECG) sensor converts the electrical activity of the heart muscle into a slowly varying voltage that a physician can read. A wireless antenna intercepts a propagating electromagnetic field and produces a tiny voltage from which a receiver recovers the encoded audio or data. In each case, the signal passes through one or more physical forms before reaching the circuit that processes it, but its mathematical character as a time-varying quantity remains the same throughout.

The most natural way to observe a signal is to plot its value as a function of time. This representation is called the *time domain*. For a voltage signal, it is the view that an oscilloscope provides: voltage on the vertical axis, time on the horizontal axis. The same representation applies to any other signal type: acoustic pressure, electric field strength, or optical intensity plotted against time all yield time-domain representations governed by the same mathematics. In this chapter, signals will be presented in the time domain using voltage as the representative quantity. Chapter 6 will introduce the complementary *frequency domain*, which reveals the sinusoidal components present in any signal.

5.2 Analog and Digital Signals

5.2.1 Analog Signals

Key Concept: Analog Signal

An analog signal is a continuous-time, continuous-valued electrical signal. Its value can be any real number within its range, and it changes smoothly without sudden jumps.

Analog signals closely mirror the physical phenomena they represent. Sound pressure varies continuously as a speaker's mouth opens and closes; the corresponding microphone voltage varies in the same continuous way. Temperature rises and falls gradually over the course of a day; a temperature sensor produces a smoothly changing voltage that follows it.

Several characteristics define analog signals in engineering practice:

1. **Continuity in time:** The signal is defined at every instant. There are no gaps or undefined moments.

2. **Continuity in value:** The signal can take any value in its operating range, not merely a fixed set of levels.

3. **Faithful representation of physical phenomena:** Many quantities in nature are inherently analog. Analog signals preserve the full detail of these quantities.

4. **Susceptibility to noise:** Because any value is meaningful, any small disturbance added to an analog signal is indistinguishable from real information. Noise corrupts analog signals in a way that is difficult to reverse.

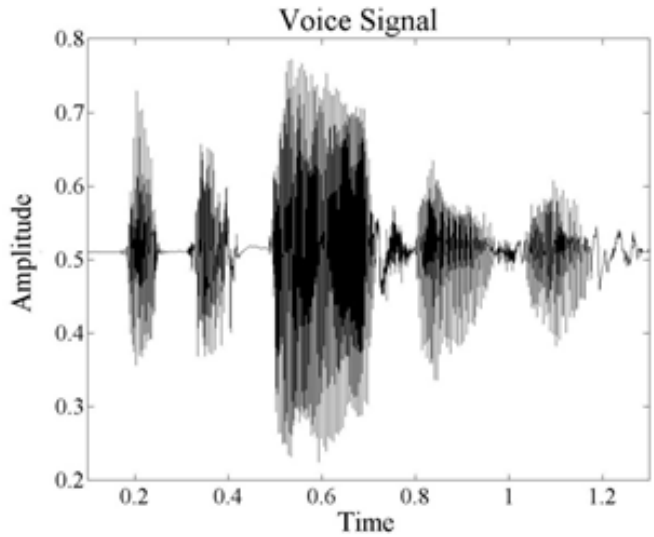

Figure 5.1: An analog voltage signal representing human speech. The signal varies smoothly and continuously, with no abrupt jumps. Source: Ordaz et al., *Journal of Applied Research and Technology*, 10(5), 783–790, 2012.

5.2.2 Digital Signals

Key Concept: Digital Signal

A digital signal is a signal that takes only a finite set of discrete values, typically two voltage levels representing the binary digits 0 and 1.

Rather than following the continuous variations of a physical quantity directly, a digital signal represents information as a sequence of binary values. A high voltage level (for example, 3.3 V) represents a logical 1; a low voltage level (for example, 0 V) represents a logical 0. All information, including text, audio, images, and video, can be encoded as a sequence of these two values.

Digital signals offer three important advantages over analog signals:

1. **Noise immunity:** A circuit reading a digital signal only needs to decide whether the voltage is closer to the high level or the low level. Small amounts of noise do not change that decision, and the signal can be regenerated perfectly at each stage of a long transmission link.

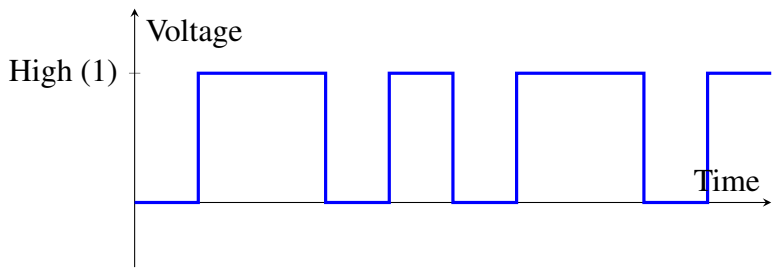

Figure 5.2: A digital signal representing binary data. Only two voltage levels are used. Transitions between them are nearly instantaneous. The binary sequence encoded here is 0 1 0 1 0 1 0 1.

2. **Exact reproduction:** A digital file copied from one medium to another is bit-for-bit identical to the original. Analog recordings degrade with each copy.

3. **Computational compatibility:** Processors, memory, and communication networks operate in the digital domain. Storing or processing a signal digitally places it directly in the form that computers require.

5.2.3 The Bridge Between Analog and Digital

The physical world is analog; computation is digital. Most practical systems contain both. An *analog-to-digital converter* (ADC) samples an analog signal at regular time intervals and represents each sample as a binary number. A *digital-to-analog converter* (DAC) reconstructs an analog signal from a sequence of binary values.

A smartphone illustrates the cycle: the microphone produces an analog voltage, the ADC converts it to digital data, a processor compresses and transmits it, the receiving device's DAC reconstructs an analog voltage, and the loudspeaker converts that voltage back to sound pressure. The conversion process introduces constraints that are explored in Section 5.6.

5.3 The Harmonic Signal

5.3.1 The Fundamental Building Block

The simplest periodic signal is the *harmonic signal*: a pure cosine or sine wave at a single frequency. It may seem overly simple, but it is the most important signal in engineering and physics. The reason is a remarkable mathematical result established by Joseph Fourier in the early nineteenth century: **any** periodic signal, regardless of its shape, can be represented exactly as a sum of harmonic signals. This means that understanding how a circuit responds to a single cosine at a given frequency is sufficient to predict how it will respond to any periodic signal whatsoever. The harmonic signal is the atom from which all other signals are built.

Section 5.5 introduces common periodic waveforms and their visual character. Chapter 6 will make the connection to harmonic decomposition precise.

5.3.2 Mathematical Description

A harmonic signal is written as:

$$v(t) = V_o \cos(\omega t + \phi) = V_o \cos(2\pi f t + \phi) \tag{5.1}$$

where:

- $v(t)$ is the instantaneous voltage at time t,
- $V_o > 0$ is the *peak amplitude* (in volts),
- ω is the *angular frequency* (in radians per second),
- f is the *frequency* (in hertz),
- ϕ is the *phase* (in radians or degrees).

The four parameters are described in the subsections that follow.

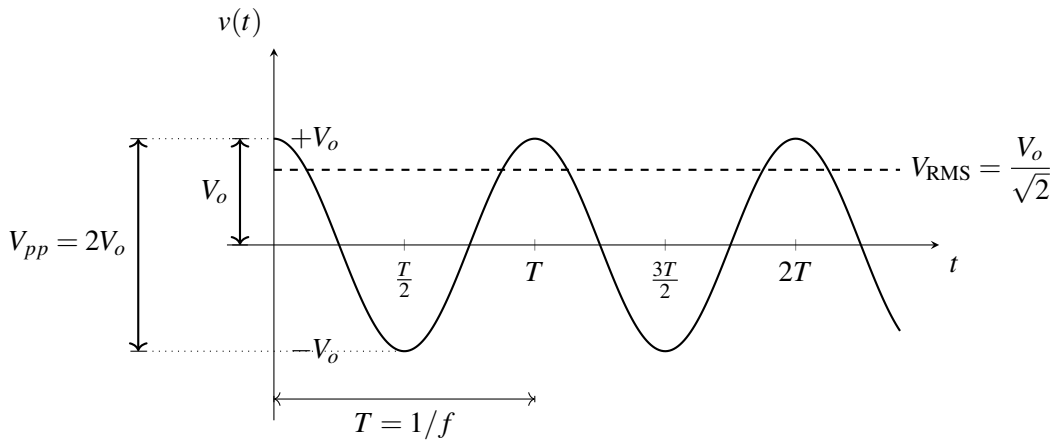

Figure 5.3: A harmonic signal $v(t) = V_o \cos(2\pi f t)$ showing the three amplitude measures. The **peak amplitude** V_o is the maximum value. The **peak-to-peak amplitude** $V_{pp} = 2V_o$ is the full span from minimum to maximum, as read directly from an oscilloscope. The **RMS amplitude** $V_{\text{RMS}} = V_o/\sqrt{2}$ (dashed line) is the effective value used in power calculations. The period $T = 1/f$ is the duration of one complete cycle.

5.3.3 Amplitude

The amplitude of a harmonic signal describes the size of its oscillation. Three measures are commonly used:

1. **Peak amplitude V_o:** The maximum value the signal reaches. In Equation 5.1, the signal ranges from $-V_o$ to $+V_o$.

2. **Peak-to-peak amplitude V_{pp}:** The total span from the most negative value to the most positive value. For a cosine, $V_{pp} = 2V_o$. This is the measurement most directly read from an oscilloscope display.

3. **Root mean square (RMS) amplitude V_{RMS}:** The effective value of the signal for power calculations. It is defined as:

$$V_{\text{RMS}} = \sqrt{\frac{1}{T}\int_0^T v^2(t)\,dt}$$

For a cosine, $V_{\text{RMS}} = V_o/\sqrt{2}$ (derived in the worked example below). Household mains voltage is specified as an RMS value: 120 V RMS in North America corresponds to a peak amplitude of approximately 170 V.

Worked Example: RMS Amplitude of a Cosine

Problem: Find V_{RMS} for $v(t) = V_o \cos(\omega t + \phi)$.
Solution:

$$\begin{aligned} v^2(t) &= V_o^2 \cos^2(\omega t + \phi) \\ &= \frac{V_o^2}{2}\left[1 + \cos(2\omega t + 2\phi)\right] \end{aligned}$$

Integrating over one full period $T = 2\pi/\omega$:

$$\frac{1}{T}\int_0^T \cos(2\omega t + 2\phi)\,dt = 0$$

because a complete cosine integrates to zero. Therefore:

$$V_{\text{RMS}} = \sqrt{\frac{1}{T}\int_0^T v^2(t)\,dt} = \sqrt{\frac{V_o^2}{2}} = \frac{V_o}{\sqrt{2}}$$

5.3.4 Frequency and Period

The *frequency* f specifies how many complete cycles the signal completes per second. Its unit is the hertz (Hz), defined as one cycle per second. The *period* T is the duration of one complete cycle:

$$T = \frac{1}{f}$$

A 1 kHz signal completes 1000 cycles every second; its period is $T = 1$ ms. A 60 Hz mains signal has a period of approximately 16.7 ms.

The *angular frequency* ω measures the same rate of oscillation but in radians per second rather than cycles per second. One complete cycle covers 2π radians, so:

$$\omega = 2\pi f$$

Angular frequency appears naturally in the mathematics of circuits containing capacitors and inductors, and will be used extensively in Chapter **??**.

5.3.5 Phase

The *phase* ϕ specifies the position of the cosine waveform relative to the reference time $t = 0$. A signal with $\phi = 0$ has its first positive peak at $t = 0$. A nonzero phase shifts the waveform in time:

- A positive phase ($\phi > 0$) moves the peak to the left, meaning the peak occurs *before* $t = 0$.

- A negative phase ($\phi < 0$) moves the peak to the right, meaning the peak occurs *after* $t = 0$.

Phase is expressed in radians or degrees. The conversion is $\phi_{\text{deg}} = \phi_{\text{rad}} \times (180/\pi)$.

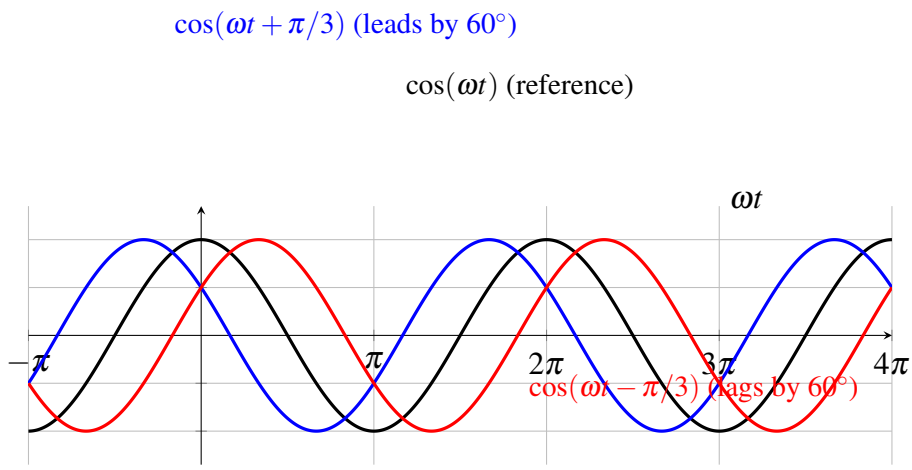

Figure 5.4: Three harmonic signals at the same frequency and amplitude, differing only in phase. The blue curve has $\phi = +\pi/3$ and its peak arrives before the reference (black) curve: it *leads* by 60°. The red curve has $\phi = -\pi/3$ and its peak arrives after the reference: it *lags* by 60°.

5.4 Leading and Lagging Sinusoids

5.4.1 Phase as Time Shift

Two sinusoidal signals at the same frequency may differ by a phase offset. Consider:

$$v_A(t) = V_A \cos(\omega t + \phi_A) \tag{5.2}$$
$$v_B(t) = V_B \cos(\omega t + \phi_B) \tag{5.3}$$

The phase difference between them is $\phi_A - \phi_B$. This difference corresponds directly to a time shift. If the peak of v_A occurs at time t_A and the peak of v_B occurs at time t_B, then:

$$\phi_A - \phi_B = \omega(t_B - t_A)$$

A positive phase difference means v_A reaches its peak earlier in time than v_B.

5.4.2 Which Signal Leads?

Rule

The signal whose peak arrives **first** (earlier in time) is said to **lead**. The signal whose peak arrives later is said to **lag**.
If $\phi_A > \phi_B$, then v_A leads v_B by $(\phi_A - \phi_B)$ radians. Equivalently, v_B lags v_A by the same amount.

A common point of confusion is the apparent paradox: a positive phase looks like the signal has been shifted *to the left* on the time axis, yet the convention is that a positive phase means

the signal appears *earlier*. Both statements describe the same fact. Reading a time-domain plot from left to right corresponds to moving forward in time. A peak that appears to the left of another peak on the plot is one that occurs at a smaller value of t, meaning it arrives first. The signal with the leftward-shifted (earlier) peak is the one that leads.

Worked Example: Identifying Lead and Lag

Given:

$$v(t) = 5\cos(1000t + \tfrac{\pi}{4})\ \text{V}, \qquad i(t) = 2\cos(1000t - \tfrac{\pi}{4})\ \text{A}$$

Questions: (a) What is the phase difference? (b) Which quantity leads? (c) Express the phase difference in degrees.

Solution:

1. The phase of v is $\phi_v = +\pi/4$ and the phase of i is $\phi_i = -\pi/4$. The phase difference is:
$$\phi_v - \phi_i = \frac{\pi}{4} - \left(-\frac{\pi}{4}\right) = \frac{\pi}{2}\ \text{rad}$$
2. Since $\phi_v > \phi_i$, the voltage $v(t)$ leads the current $i(t)$ by $\pi/2$ radians. Equivalently, $i(t)$ lags $v(t)$ by $\pi/2$ radians.
3. Converting: $\pi/2 \times (180^\circ/\pi) = 90^\circ$.

5.4.3 Why Phase Matters in Circuits

Phase relationships between voltage and current carry physical meaning. When a sinusoidal source drives a resistor, the current and voltage are *in phase*: their peaks and zero crossings coincide. The resistor absorbs power continuously.

When a sinusoidal source drives a capacitor or inductor, the current and voltage are *out of phase* by 90°. For a capacitor, the current leads the voltage by 90°. For an inductor, the current lags the voltage by 90°. A 90° phase difference means the device alternately absorbs energy from the circuit and returns it, rather than dissipating it as heat. This distinction between resistive (in-phase) and reactive (out-of-phase) behavior is central to the analysis of AC circuits and will be developed fully in Chapter **??**.

Note

A mnemonic used in introductory courses is **ELI the ICE man**. In an inductor (L), voltage (E) leads current (I): ELI. In a capacitor (C), current (I) leads voltage (E): ICE. While mnemonics are a starting point, the physical reasoning above is more reliable for unfamiliar situations.

5.5 Common Periodic Waveforms

A periodic signal repeats the same pattern at regular intervals. The time required for one complete repetition is the period T, and the fundamental frequency is $f_0 = 1/T$. The harmonic cosine is the simplest periodic signal, but three other waveforms appear constantly in electrical engineering practice and in the laboratory.

5.5.1 Square Wave

A square wave alternates between two values, spending equal time at each. When the high duration equals the low duration, the waveform has a *duty cycle* of 50%.

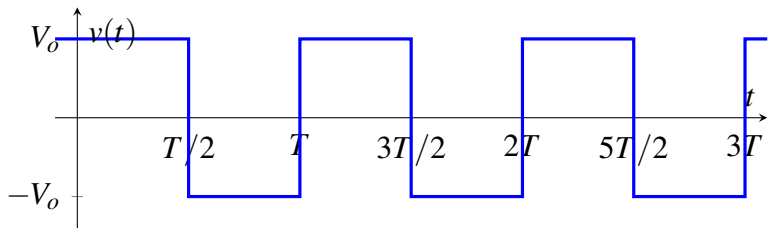

Figure 5.5: A square wave with 50% duty cycle, period T, and peak amplitude V_o. The sharp vertical transitions are a defining feature; they require high-frequency content to be reproduced faithfully.

The sharp vertical edges of a square wave are impossible for a physical circuit with limited bandwidth to reproduce exactly. In practice, square wave edges are slightly rounded. Digital clock signals, pulse-width modulation (PWM) in motor controllers, and logic-level outputs from microcontrollers are all examples of square-wave signals.

5.5.2 Sawtooth Wave

A sawtooth wave rises linearly from its minimum to its maximum over each period, then drops abruptly back to the minimum.

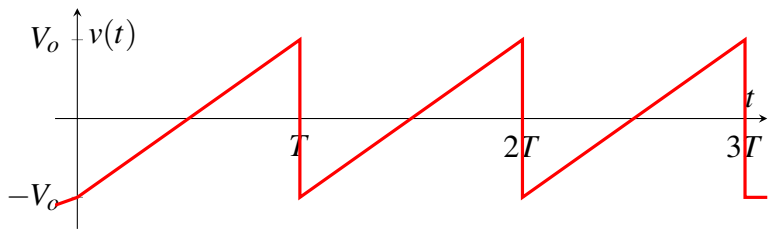

Figure 5.6: A sawtooth wave with period T and peak amplitude V_o. The signal rises linearly from $-V_o$ to V_o over each period, then resets abruptly to $-V_o$. Function generators and oscilloscope timing circuits use sawtooth signals internally.

5.5.3 Triangle Wave

A triangle wave rises linearly to its maximum and then falls linearly back to its minimum, with no abrupt transitions.

5.5.4 Connecting Waveform Shape to Frequency Content

A key observation to carry into Chapter 6 is that the sharpness of a waveform's features is directly related to the high-frequency content required to represent it.

- The **square wave** has instantaneous (vertical) transitions. Reproducing them requires contributions from harmonics extending to very high frequencies.

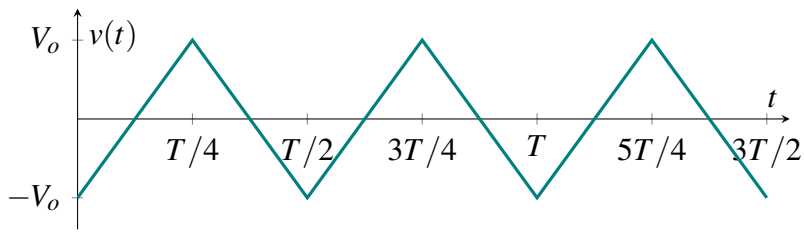

Figure 5.7: A triangle wave with period T. The signal rises linearly from $-V_o$ at $t = 0$ to its peak V_o at $T/4$, falls back to $-V_o$ at $T/2$, and repeats. Unlike the square and sawtooth waves, the triangle wave has no abrupt transitions. Its corners are sharp, but its slopes are continuous.

- The **sawtooth wave** also has an abrupt reset, but its ramp is gradual. It requires a wide range of harmonics, though the very high harmonics are less prominent than in a square wave.

- The **triangle wave** has no abrupt transitions. Its corners are sharp but finite in slope. The triangle wave's high-frequency harmonics decrease much more rapidly with frequency than those of the square or sawtooth.

- The **cosine** has no sharp features at all. It is perfectly smooth and contains exactly one frequency.

This pattern, smoother waveforms need fewer high-frequency components, will be made quantitative when Fourier Series are introduced in Chapter 6.

Worked Example: RMS Amplitude of a Rectangular Wave

A rectangular wave has peak amplitude V_o, period T, and duty cycle D, meaning it is high for a fraction D of each period and zero otherwise. Find V_{RMS} for $D = 0.25$.

Solution:
Over one period, the signal equals V_o for duration DT and 0 for the remaining $(1-D)T$. The mean square value is therefore:

$$\frac{1}{T}\int_0^T v^2(t)\,dt = \frac{1}{T}\left[\int_0^{DT} V_o^2\,dt + \int_{DT}^T 0^2\,dt\right] = \frac{1}{T}\cdot V_o^2 \cdot DT = DV_o^2$$

Taking the square root:

$$V_{\text{RMS}} = V_o\sqrt{D}$$

This result holds for any duty cycle D. For $D = 0.25$:

$$V_{\text{RMS}} = V_o\sqrt{0.25} = \frac{V_o}{2}$$

Interpretation: a 25% duty cycle rectangular wave delivers the same power to a resistor as a DC voltage of $V_o/2$. Compare this with a cosine of the same peak amplitude, which gives $V_{\text{RMS}} = V_o/\sqrt{2} \approx 0.707\,V_o$. The rectangular wave at 25% duty cycle delivers less power than the cosine because it is at zero for three quarters of each cycle.

5.6 Sampling and the Nyquist Criterion

5.6.1 From Continuous to Discrete: What Sampling Means

An analog-to-digital converter does not capture the complete continuous waveform of a signal. It takes *samples*: measurements of the signal's instantaneous voltage at equally spaced moments in time. The time between samples is the *sampling period* T_s, and its reciprocal is the *sampling frequency* (or *sampling rate*) f_s:

$$f_s = \frac{1}{T_s}$$

Each sample is converted to a binary number. The collection of these numbers is the digital representation of the signal.

The question that arises immediately is: how rapidly must the ADC sample the signal to capture it faithfully? If the sampling rate is too low, the recorded sequence of numbers no longer accurately represents the original signal.

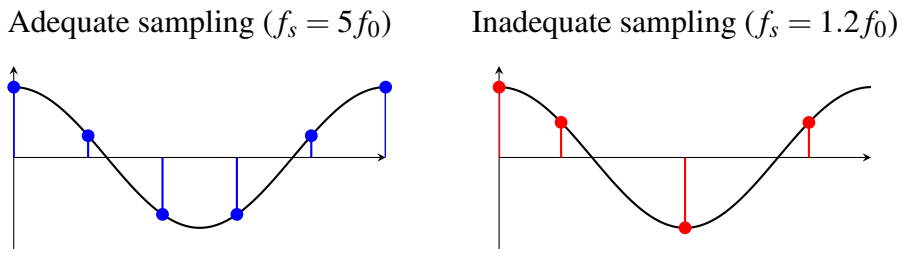

Figure 5.8: Left: a 1 kHz cosine sampled at 5 kHz (five samples per cycle). The samples (blue) capture the waveform faithfully. Right: the same cosine sampled at 1.2 kHz (fewer than two samples per cycle). The sparse red samples are consistent with a much lower frequency (dashed red curve), which is an alias of the original.

5.6.2 The Nyquist Sampling Criterion

The minimum sampling rate required to represent a signal without distortion is determined by the *Nyquist criterion*, established by Harry Nyquist in the 1920s.

Nyquist Sampling Criterion

To reconstruct an analog signal from its samples without error, the sampling frequency f_s must be at least twice the highest frequency $f_{\max}$ present in the signal:

$$f_s \geq 2\, f_{\max}$$

The value $f_s/2$ is called the *Nyquist frequency*.

The factor of 2 has an intuitive justification. A sinusoid at frequency f_0 has exactly one peak and one trough per cycle. To distinguish a peak from a trough, at minimum one sample must fall near the peak and one near the trough. That requires at least two samples per cycle, which corresponds to $f_s \geq 2f_0$. Fewer than two samples per cycle leaves the distinction between peaks and troughs ambiguous.

5.6.3 Aliasing: When Sampling Goes Wrong

When the sampling rate falls below the Nyquist criterion, a phenomenon called *aliasing* occurs. High-frequency components of the signal are indistinguishable from low-frequency components at the sampled rate, and they appear in the reconstructed signal at incorrect, lower frequencies.

The Core Problem: One Set of Samples, Two Possible Signals

Sampling records only the signal's value at discrete moments. Between those moments, the original waveform is discarded. This raises a fundamental question: given only the recorded sample values, can the original signal always be recovered uniquely?

The answer is no, unless the Nyquist criterion is satisfied. When too few samples are taken, multiple different sinusoids can produce exactly the same sequence of sample values. Figure 5.9 shows this directly.

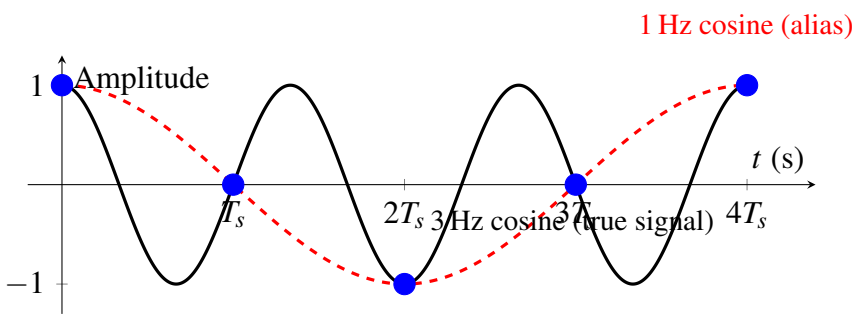

Figure 5.9: Two cosines at different frequencies, 1 Hz (dashed red) and 3 Hz (solid black), produce *identical* sample values (blue dots) when sampled at $f_s = 4$ Hz. Given only the blue dots, it is impossible to tell which signal was the source. The ADC recorded the samples faithfully; the problem is that $f_s = 4$ Hz is less than 2×3 Hz, violating the Nyquist criterion for the 3 Hz signal.

The two signals in Figure 5.9 are called *aliases* of each other at the given sampling rate. When the digital system reconstructs a signal from the samples, it has no basis for choosing the 3 Hz version over the 1 Hz version. It will always recover the lower-frequency alias, because that is the simplest signal consistent with the data.

Calculating the Alias Frequency

The alias frequency is not arbitrary. It is determined precisely by the sampling rate and the original signal frequency. When a signal at frequency f is sampled at rate f_s and the Nyquist criterion is violated, the alias appears at:

$$f_{\text{alias}} = |f - n \cdot f_s| \tag{5.4}$$

where n is the positive integer that brings the result into the range $[0,\ f_s/2]$. This formula finds the frequency that is indistinguishable from f at the given sampling rate.

Worked Example: Finding the Alias Frequency

Example 1. Verify the result in Figure 5.9: $f = 3\,\text{Hz}$, $f_s = 4\,\text{Hz}$.

$$n = 1: \quad f_{\text{alias}} = |3 - 1 \times 4| = 1\,\text{Hz}$$

The result, 1 Hz, lies in $[0,\ f_s/2] = [0,\ 2]$ Hz. The 3 Hz signal aliases to 1 Hz. This matches the dashed red curve in Figure 5.9.

Example 2. A 900 Hz signal is sampled at $f_s = 1000$ Hz.

$$n = 1: \quad f_{\text{alias}} = |900 - 1 \times 1000| = 100\,\text{Hz}$$

The result, 100 Hz, lies in $[0,\ 500]$ Hz. The 900 Hz signal aliases to 100 Hz. See Figure 5.10.

Figure 5.10 shows Example 2 in full. The key observation is that the blue sample dots lie simultaneously on both the solid black 900 Hz curve and the dashed red 100 Hz curve. The samples do not distinguish between the two. A digital system reconstructing the signal from those dots will produce the 100 Hz waveform, not the 900 Hz original.

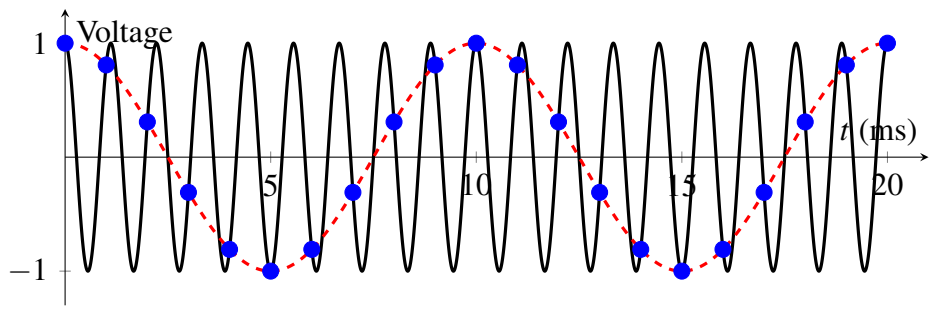

Figure 5.10: A 900 Hz signal (solid black) sampled at $f_s = 1$ kHz. The Nyquist criterion requires $f_s \geq 2 \times 900 = 1800$ Hz; at 1 kHz this is violated. The alias frequency, from Equation 5.4 with $n = 1$, is $|900 - 1000| = 100$ Hz, shown as the dashed red curve. The blue dots are the samples recorded by the ADC, spaced 1 ms apart. Every blue dot lies *exactly on both curves*: the 900 Hz signal and the 100 Hz alias produce identical sample values at this sampling rate. The ADC cannot distinguish between them. When the digital system reconstructs the signal from the blue dots alone, it recovers the slowly varying 100 Hz alias, and the original 900 Hz information is irrecoverably lost.

An Everyday Analogy: The Wagon-Wheel Effect

Having established the mechanism precisely, an everyday analogy can reinforce the intuition. In film and video, a spinning wheel can appear to rotate slowly, stand still, or even turn backwards. The camera samples the wheel's angular position at the frame rate, typically 24 or 30 frames per second. If the wheel completes nearly one full revolution between frames, the camera records it at nearly the same angular position each time. The sampled positions are consistent with a very slowly rotating wheel, which is the alias. The true high rotation rate is lost.

The parallel with electrical signals is exact. The camera frame rate corresponds to f_s. The wheel's rotation rate corresponds to the signal frequency f. The apparent slow rotation is the

alias at f_{alias}. The only solution, in both cases, is to sample fast enough that the ambiguity cannot arise.

5.6.4 Anti-Aliasing Filters

The solution to aliasing is to prevent high-frequency signal components from reaching the ADC in the first place. An *anti-aliasing filter*, placed before the ADC in the signal chain, is a low-pass filter that attenuates all frequency content above $f_s/2$ before sampling occurs. Once a component has been aliased, it cannot be removed from the digital data; the filter must act on the analog signal before conversion.

The design of low-pass filters is covered in Chapter 9. For now, the important point is that any real ADC system includes an anti-aliasing filter as a necessary component of its design.

5.6.5 Practical Sampling Rates

Table 5.1 lists sampling rates used in several common applications, together with the signal bandwidth they must capture and the resulting Nyquist margin.

Table 5.1: Sampling rates in common applications.

Application	Signal bandwidth	Sampling rate f_s	Nyquist margin
Telephone voice	≤ 3.4 kHz	8 kHz	$> 2\times$
Audio CD	≤ 20 kHz	44.1 kHz	$> 2\times$
Professional audio	≤ 24 kHz	96 kHz	$4\times$
Medical ECG	≤ 100 Hz	250–500 Hz	2.5–5$\times$
M2K oscilloscope	≤ 30 MHz	100 MHz	$> 3\times$

Note that practical systems sample somewhat above the Nyquist minimum. This margin accommodates the fact that real anti-aliasing filters do not cut off infinitely sharply at $f_s/2$; a small guard band reduces the demand on the filter.

5.6.6 Quantization

Sampling discretizes the *time* axis. An additional process called *quantization* discretizes the *amplitude* axis. Each sample is represented as a binary integer with a fixed number of bits. An n-bit ADC divides the full-scale voltage range into 2^n levels. A 12-bit ADC (used in the M2K) produces $2^{12} = 4096$ levels. The difference between adjacent levels is the *least significant bit* (LSB) voltage, and any sample value that falls between two levels is rounded to the nearest one. This rounding introduces a small error called *quantization noise*.

For the M2K operating over a ± 5 V range, the LSB voltage is approximately $10\ \text{V}/4096 \approx 2.4$ mV. Voltage differences smaller than this cannot be resolved by the instrument. This connects directly to the concept of *resolution* introduced in Lab 2.

Chapter Summary

This chapter introduced the vocabulary and tools for describing electrical signals in the time domain.

Analog signals vary continuously in time and value. Digital signals take only two values and represent information as binary sequences. The ADC and DAC convert between these two representations.

A harmonic signal $v(t) = V_o \cos(\omega t + \phi)$ is characterized by four parameters. The peak amplitude V_o describes the signal's size. The angular frequency $\omega = 2\pi f$ and period $T = 1/f$ describe how rapidly it oscillates. The phase ϕ describes the position of its peak relative to $t = 0$. The RMS amplitude, $V_{\text{RMS}} = V_o/\sqrt{2}$, is the effective value for power calculations.

When two sinusoids at the same frequency differ in phase, the one whose peak arrives first *leads*; the other *lags*. Phase relationships between voltage and current determine whether a circuit element dissipates energy (resistor, in phase) or stores and returns it (capacitor or inductor, 90° out of phase).

Square, sawtooth, and triangle waves are common periodic waveforms. Their sharp features signal the presence of high-frequency harmonics. The smoother the waveform, the more rapidly its harmonics diminish with increasing frequency. Chapter 6 will make this connection precise through the Fourier Series.

The Nyquist criterion requires that the sampling rate satisfy $f_s \geq 2f_{\text{max}}$ to avoid aliasing. Violating this criterion causes high-frequency components to masquerade as low-frequency ones in the digitized data, an error that cannot be corrected after the fact. Anti-aliasing filters remove signal content above $f_s/2$ before the ADC converts the signal.

Key formulas:

Harmonic signal	$v(t) = V_o \cos(\omega t + \phi)$
Period and frequency	$T = 1/f$
Angular frequency	$\omega = 2\pi f$
RMS amplitude	$V_{\text{RMS}} = V_o/\sqrt{2}$
Nyquist criterion	$f_s \geq 2 f_{\text{max}}$

Chapter 6

Signals in Frequency

Chapter 5 introduced signals as quantities that vary with time, and developed the tools needed to describe them: period, frequency, amplitude, phase, and the harmonic signal as the fundamental building block. That time-domain view is natural and intuitive, yet it hides something important. Two signals that look very different in the time domain may share the same underlying frequency content, and two signals that look deceptively similar may differ in ways that only become visible when the question is asked differently: *what frequencies does this signal contain, and how strongly is each one present?*

This chapter answers that question. It introduces the frequency domain as a complementary way to represent signals, builds the concept of a spectrum from the ground up using the harmonic signal as a starting point, shows how the Fourier Series decomposes any periodic signal into a sum of harmonics, extends the idea briefly to aperiodic signals via the Fourier Transform, and explains why the property of linearity makes all of this analysis enormously powerful in practice. The chapter closes with a survey of frequency ranges and their engineering applications.

6.1 Two Ways to See a Signal

Consider a chord played on a piano. In the time domain, a microphone recording of that chord traces a complex, rapidly changing waveform. Identifying which notes are present from the waveform alone is difficult; the individual contributions are superimposed and tangled together. A trained musician listening to the chord, however, immediately recognises each note because the human auditory system performs, in effect, a frequency analysis: it separates the incoming sound into its constituent tones and identifies each one independently.

Engineers borrow the same idea. The *time domain* describes how a signal changes as a function of time. The *frequency domain* describes how much of each frequency is present in the signal. Neither representation discards information; they are two equivalent ways of describing the same signal. Switching between them is governed by the mathematics of the Fourier Series and the Fourier Transform, which are introduced in the sections that follow.

Key Concept: Time Domain and Frequency Domain

The **time domain** represents a signal as a function of time: $v(t)$. The **frequency domain** represents the same signal as a function of frequency, showing which frequency components are present and how large each one is. The two representations carry identical information expressed in different forms.

Figure 6.1 illustrates the idea with a simple example. A single cosine wave occupies one point in the frequency domain: a single vertical line at the cosine frequency. A sum of three cosines at different frequencies occupies three points. When many harmonics are summed to build a more complex waveform such as a square wave, the frequency-domain picture shows precisely which harmonics contribute and how strongly each one does so.

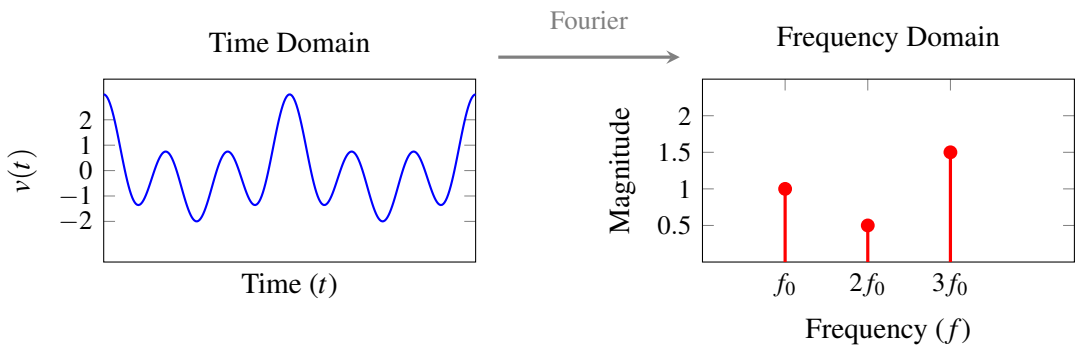

Figure 6.1: The same signal represented in two complementary ways. The time-domain plot (left) shows the waveform as it evolves in time; the frequency-domain plot (right) shows the magnitude of each frequency component present in the signal. Each vertical line in the frequency domain corresponds to one harmonic component.

6.2 Spectrum of a Harmonic Signal

The simplest possible frequency-domain picture belongs to the harmonic (sinusoidal) signal introduced in Section 5.3. A pure cosine

$$v(t) = V_p \cos(2\pi f_0 t + \phi) \tag{6.1}$$

contains exactly one frequency: f_0. In the frequency domain it therefore appears as a single vertical line, or *spectral line*, located at f_0 with height V_p.

The harmonic signal is the atom of frequency-domain analysis. Every more complex periodic signal is a molecule assembled from these atoms, and the frequency-domain representation identifies exactly which atoms are present and in what proportions. The following section shows how that assembly works.

Key Concept: Spectral Line

A **spectral line** (or **line spectrum**) is the frequency-domain representation of a single harmonic component. Its horizontal position gives the frequency of that component; its height gives the magnitude. A signal made up of several harmonics produces several spectral lines.

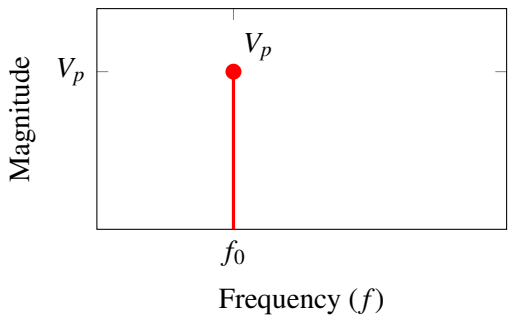

Figure 6.2: Frequency spectrum of a single cosine $v(t) = V_p \cos(2\pi f_0 t + \phi)$. Because the signal contains only one frequency, its spectrum consists of a single spectral line at f_0 with magnitude V_p.

6.3 Fourier Series

The goal of this section is to answer a deceptively simple question: if the harmonic signal is the fundamental building block, how do we build more complex periodic signals from it?

6.3.1 Building Periodic Signals from Harmonics

Begin with a concrete target: a square wave that alternates between $+1$ and -1 with period T and fundamental frequency $f_0 = 1/T$. Rather than starting with a formula, start by listening to what happens when harmonic components are added one at a time.

Step 1: fundamental only. A cosine at f_0 with amplitude $\frac{4}{\pi} \approx 1.27$ is already a rough approximation. It has the right period and the right sign, but it is smooth where the square wave is flat, and it overshoots at the transitions.

Step 2: add the third harmonic. Adding a cosine at $3f_0$ with amplitude $\frac{4}{3\pi}$ narrows the overshoot and flattens the top and bottom of the waveform noticeably.

Step 3: add the fifth harmonic. Adding a cosine at $5f_0$ with amplitude $\frac{4}{5\pi}$ flattens the waveform further. The transitions are becoming steeper.

Each odd harmonic that is added brings the approximation closer to the ideal square wave. Figure 6.3 shows this progression.

Several observations follow directly from Figure 6.3:

1. The square wave contains only *odd* harmonics: f_0, $3f_0$, $5f_0$, and so on. Even harmonics are entirely absent.

2. The amplitude of the nth harmonic decreases as $1/n$. Lower harmonics carry more of the signal's energy; higher harmonics refine the shape.

3. The sharp transitions of the square wave in the time domain correspond to high-frequency content in the frequency domain. Removing the higher harmonics smooths and rounds the corners.

4. An *infinite* number of harmonics is needed to reproduce the instantaneous transitions exactly. Any finite approximation exhibits small oscillations near the transitions, a phenomenon known as the Gibbs phenomenon.

This synthesis-first view makes the Fourier Series formula, which appears in the next subsection, both natural and understandable: the formula simply formalises the process of identifying the correct amplitude and phase for each harmonic component.

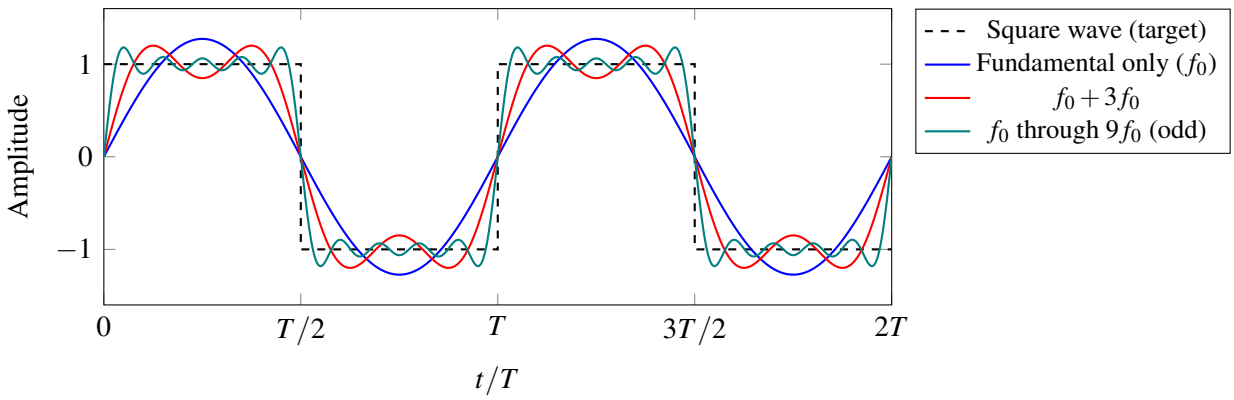

Figure 6.3: Progressive Fourier Series approximations of a square wave. Adding successive odd harmonics brings the approximation closer to the ideal square wave (dashed). Each harmonic contributes to flattening the top and bottom and sharpening the transitions. An infinite number of odd harmonics is required to reproduce the instantaneous transitions of an ideal square wave exactly.

6.3.2 The Fourier Series Formula

Mathematical Description: Fourier Series

A periodic signal $f(t)$ with period T can be expressed as an infinite sum of harmonics:

$$f(t) = \sum_{n=-\infty}^{\infty} C_n e^{j\omega_0 nt} \tag{6.2}$$

where $\omega_0 = 2\pi/T$ is the fundamental angular frequency. The term $C_n e^{j\omega_0 nt}$ encodes a sinusoid at frequency $n\omega_0$; the coefficients C_n are calculated as:

$$C_n = \frac{1}{T}\int_0^T f(t)\, e^{-j\omega_0 nt}\, dt$$

Each coefficient C_n is a complex number whose magnitude gives the amplitude of the nth harmonic and whose angle gives the phase. The notation uses complex exponentials, which will become transparent after complex numbers are covered later in the course. For now, the important message is equation 6.2: *any* periodic signal can be expressed as a weighted sum of harmonics at integer multiples of ω_0. The coefficients C_n are the weights.

You will not be asked to calculate C_n by hand in this course. What matters is understanding what the formula says: a complex periodic signal in the time domain corresponds to a discrete set of spectral lines in the frequency domain, one line for each value of n.

The relationship between the period T and the spacing of spectral lines is worth noting explicitly. If a signal has period T, its fundamental frequency is $f_0 = 1/T$, and harmonics appear at f_0, $2f_0$, $3f_0$, and so on. A signal with a longer period has a lower fundamental frequency and therefore more closely spaced spectral lines. As $T \to \infty$, the spacing between lines approaches zero and the discrete sum transitions into an integral, leading to the Fourier Transform discussed in Section 6.4.

6.3.3 Spectra of Common Waveforms

Each periodic waveform has a characteristic spectrum that can be recognised by its pattern of spectral lines. Figure 6.4 shows the spectra of the three waveforms introduced in Section 5.5: the square wave, the sawtooth wave, and the triangle wave.

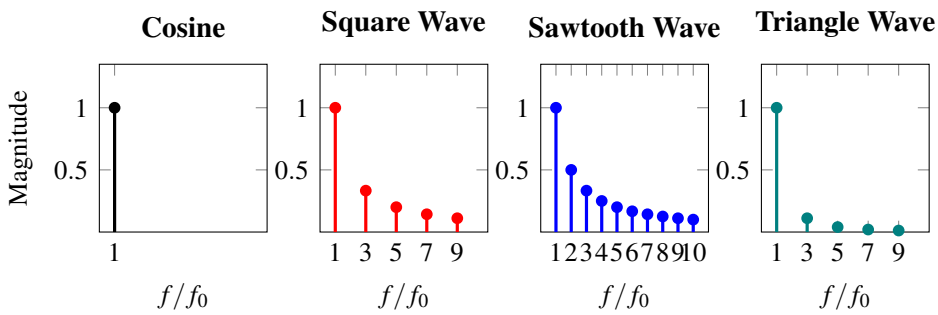

Figure 6.4: Frequency spectra of four periodic waveforms. *First:* A cosine contains a single spectral line at the fundamental frequency f_0. *Second:* The square wave contains only odd harmonics (f_0, $3f_0$, $5f_0$, ...) with amplitudes falling as $1/n$. *Third:* The sawtooth wave contains all harmonics (both even and odd) with amplitudes falling as $1/n$. *Fourth:* The triangle wave contains only odd harmonics, but amplitudes fall as $1/n^2$, so higher harmonics diminish far more rapidly than in the square wave. Magnitudes are normalised to the fundamental.

Table 6.1 summarises the spectral properties of these waveforms together with the cosine, which serves as the reference case.

Table 6.1: Spectral properties of common periodic waveforms.

Waveform	Harmonics present	Amplitude of nth harmonic	Decay rate
Cosine	Fundamental only	V_p (at $n = 1$ only)	N/A
Square wave	Odd $(1, 3, 5, \ldots)$	$\propto 1/n$	Slow
Sawtooth wave	All $(1, 2, 3, \ldots)$	$\propto 1/n$	Slow
Triangle wave	Odd $(1, 3, 5, \ldots)$	$\propto 1/n^2$	Fast

Two practical points follow from this table.

First, the decay rate is directly connected to the smoothness of the waveform. The triangle wave is continuous and has a smooth appearance despite its pointed peaks; its harmonic amplitudes decay rapidly because the waveform requires little high-frequency content to maintain its shape. The square wave has instantaneous transitions; reproducing those transitions requires significant high-frequency content, and the amplitudes decay only slowly.

Second, the bandwidth required to transmit a waveform faithfully is determined by how many harmonics carry significant energy. Transmitting a square wave with fidelity requires a system that passes many odd harmonics. Transmitting a triangle wave requires far fewer, because higher harmonics are negligibly small. This is a key consideration in filter design, which is covered in Chapter 9.

6.4 Spectrum of Aperiodic Signals

Not all signals are periodic. A single voltage pulse, the click of a switch, the impulse of a sensor triggered by a passing particle: these events occur once or in an irregular fashion and do not establish a repeating pattern.

Key Concept: Aperiodic Signal

An **aperiodic signal** does not repeat at regular intervals. It may occur once or continue indefinitely without a consistent period. Because there is no period T, there is no fundamental frequency f_0, and the Fourier Series does not apply directly.

6.4.1 Continuous Spectra

The key difference between the spectrum of a periodic signal and that of an aperiodic signal lies in whether the spectrum is *discrete* or *continuous*.

A periodic signal has a discrete spectrum: energy is concentrated at the specific frequencies f_0, $2f_0$, $3f_0$, and so on. Between these frequencies, the spectrum is zero. An aperiodic signal, by contrast, has a *continuous* spectrum: energy is distributed across a continuous range of frequencies rather than concentrated at isolated points.

Intuitively, this follows from the Fourier Series perspective. A periodic signal with period T has spectral lines spaced $f_0 = 1/T$ apart. As the period grows longer, the spectral lines move closer together. In the limit as $T \to \infty$, the signal occurs only once, the lines merge into a continuous curve, and the Fourier Series sum becomes an integral.

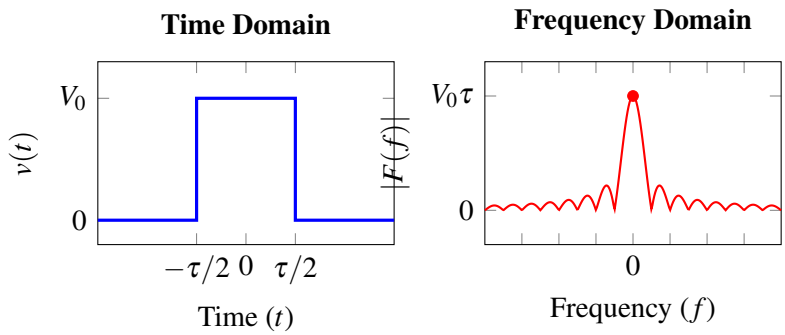

Figure 6.5: A rectangular pulse in the time domain (left) and its continuous frequency spectrum (right). Unlike the discrete spectral lines of a periodic signal, the pulse spectrum is a smooth, continuous function of frequency. The spectrum has the shape of a sinc function: it is largest at zero frequency and falls to zero at integer multiples of $1/\tau$, where τ is the pulse width.

Figure 6.5 shows a rectangular pulse and its spectrum. Three observations are worth noting.

1. **Short pulses have wide spectra.** A narrower pulse in time produces a wider, flatter spectrum in frequency. In the extreme case of an infinitely short impulse, the spectrum is perfectly flat across all frequencies. This time-frequency trade-off is fundamental and appears throughout signal processing.

2. **The spectrum is continuous.** There are no isolated spikes. Every frequency contributes, though not equally.

3. **Bandwidth.** The range of frequencies where the spectrum is significant is called the *bandwidth* of the signal. A signal with narrow bandwidth can be transmitted through a channel with limited frequency range; a wide-bandwidth signal requires a broader channel. Digital communication systems routinely require that pulse shapes be designed to fit within an allocated bandwidth, making frequency-domain analysis a practical necessity.

6.4.2 The Fourier Transform

Mathematical Description: Fourier Transform

The Fourier Transform extends the Fourier Series to aperiodic signals. Given an aperiodic signal $f(t)$, its frequency-domain representation $F(\omega)$ is defined by

$$F(\omega) = \int_{-\infty}^{\infty} f(t)\, e^{-j\omega t}\, dt$$

and the original signal is recovered from $F(\omega)$ by the inverse transform:

$$f(t) = \frac{1}{2\pi} \int_{-\infty}^{\infty} F(\omega)\, e^{j\omega t}\, d\omega$$

The function $F(\omega)$ is in general complex: its magnitude $|F(\omega)|$ gives the spectral amplitude at each frequency, and its phase $\angle F(\omega)$ gives the phase. The two together carry exactly the same information as $f(t)$; neither representation loses anything.
You will not be required to evaluate these integrals in this course. The important message is conceptual: any aperiodic signal can be represented as a continuous weighted superposition of harmonics. The weight at each frequency ω is given by $F(\omega)$.

MATLAB Connection

In your MATLAB exercises you will use the Fast Fourier Transform (FFT) to compute the spectrum of sampled signals. The FFT is an efficient numerical algorithm for evaluating the Discrete Fourier Transform, which is the sampled-signal version of the Fourier Transform. Periodic signals produce spectra with distinct peaks at the harmonic frequencies; aperiodic signals produce smooth, broad spectra. Experimenting with different signal shapes and durations in MATLAB develops an intuitive feel for the time-frequency relationship that equations alone cannot fully convey.

6.5 Linearity and Why Harmonics Unlock System Analysis

The Fourier Series and Fourier Transform would be interesting mathematical facts without further consequence if it were not for a property shared by most electrical circuits and systems under normal operating conditions: *linearity*. Linearity is what transforms frequency-domain analysis from a descriptive tool into a predictive one.

Key Concept: Linear System

A system is **linear** if it satisfies two properties:

1. **Homogeneity (scaling):** if input $x(t)$ produces output $y(t)$, then input $a \cdot x(t)$ produces output $a \cdot y(t)$ for any constant a.

2. **Superposition (additivity):** if input $x_1(t)$ produces output $y_1(t)$ and input $x_2(t)$ produces output $y_2(t)$, then input $x_1(t) + x_2(t)$ produces output $y_1(t) + y_2(t)$.

6.5.1 Superposition and Harmonic Analysis

The connection between linearity and the Fourier Series is direct. Suppose a linear system is driven by the signal

$$v_{\text{in}}(t) = C_1 e^{j\omega_1 t} + C_2 e^{j\omega_2 t} + C_3 e^{j\omega_3 t} + \cdots$$

Because the system is linear, the superposition property applies: the output is the sum of the responses to each harmonic component taken individually. The total output is therefore:

$$v_{\text{out}}(t) = H(\omega_1)C_1 e^{j\omega_1 t} + H(\omega_2)C_2 e^{j\omega_2 t} + H(\omega_3)C_3 e^{j\omega_3 t} + \cdots$$

where $H(\omega_n)$ is the system's response to a single harmonic at frequency ω_n. This function $H(\omega)$ is called the *frequency response* of the system.

The implication is profound. To predict how a linear system responds to *any* input signal, it is sufficient to characterise the system at each frequency separately and then use superposition to assemble the result. The hard problem of analysing a complex input reduces to the simpler problem of analysing one frequency at a time.

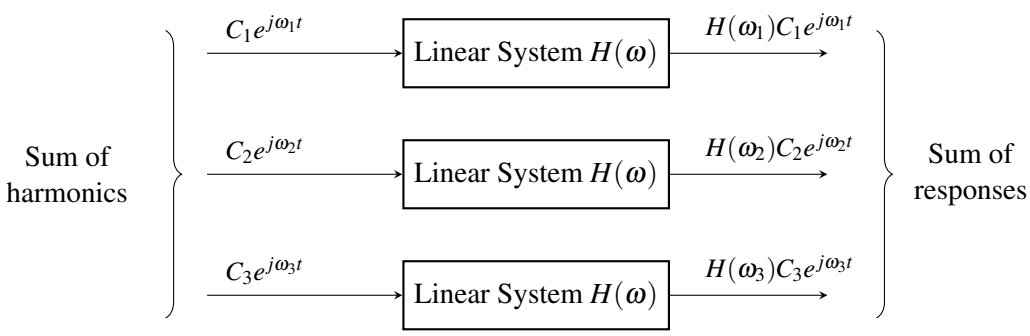

Figure 6.6: Superposition in a linear system. Each harmonic component of the input is processed independently by the system. The output component at each frequency is simply the input component multiplied by the system's frequency response $H(\omega)$ at that frequency. The total output is the sum of all these individual responses.

6.5.2 Linear and Nonlinear Elements

Electrical circuits typically contain a mix of linear and nonlinear elements.

Linear elements obey their governing relationships for all amplitudes and all frequencies. Resistors (Ohm's law: $v = Ri$), capacitors, and inductors are linear. An amplifier operating within its rated range behaves linearly to a good approximation.

Nonlinear elements violate at least one of the two linearity conditions. The ideal diode explored in is nonlinear: its behaviour depends on the polarity of the voltage, not just its magnitude. A transistor operating as a switch is nonlinear. Any element with a saturating or threshold characteristic is nonlinear.

Note: Linear Range

Many elements that are nonlinear in general behave approximately linearly within a limited operating range. An amplifier is linear for small signals but saturates and becomes nonlinear when the signal amplitude is too large. A loudspeaker driver reproduces sound cleanly at moderate levels but distorts at high volumes. Much of circuit design involves ensuring that nonlinear devices are operated within their approximately linear range.

6.5.3 Looking Ahead: AC Analysis

The practical payoff of linearity is the subject of Chapter **??**. If a circuit is linear, its response to a sinusoidal input at frequency ω is also sinusoidal at the same frequency ω; only the amplitude and phase are altered. This means that the complete behaviour of a linear circuit for any input can be determined by analysing its response to a single harmonic and recording how the amplitude and phase change.

A systematic framework for doing this, called *phasor analysis*, converts the circuit's differential equations into algebraic equations at each frequency. The result is a powerful and tractable method for designing and analysing circuits that process sinusoidal signals: audio amplifiers, radio receivers, power converters, sensor interfaces, and many others. All of this rests on the two foundations laid in this chapter: the Fourier Series (any periodic signal is a sum of harmonics) and linearity (the response to a sum equals the sum of responses).

6.6 Frequency Ranges and Applications

Engineers work with signals across an enormous range of frequencies, from sub-hertz geological measurements to terahertz imaging systems. Table 6.2 provides an orientation to the principal bands and their associated applications.

Table 6.2: Representative frequency ranges and applications.

Band	Approximate range	Representative applications
Sub-audio	< 20 Hz	Seismic sensing, infrasound monitoring
Audio	20 Hz – 20 kHz	Speech, music, hearing-aid circuits
Ultrasonic	20 kHz – 1 MHz	Medical imaging, non-destructive testing
Radio (AM)	530 – 1700 kHz	AM broadcast, marine communication
Radio (FM/VHF)	30 – 300 MHz	FM broadcast, aircraft communication
Microwave	300 MHz – 30 GHz	Wi-Fi, mobile telephony, radar, GPS
Millimetre wave	30 – 300 GHz	5G communication, automotive radar
Terahertz	0.3 – 10 THz	Security imaging, spectroscopy

Several engineering domains that depend directly on frequency-domain thinking are worth noting.

Audio engineering. Equaliser circuits selectively amplify or attenuate specific frequency bands to improve the tonal balance of a recording. The ability to manipulate individual harmonics in the frequency domain, rather than operating on the entire waveform at once, makes this practical.

Biomedical engineering. Electroencephalogram (EEG) signals are characterised by named frequency bands: delta (below 4 Hz), theta (4–8 Hz), alpha (8–13 Hz), and beta (above 13 Hz).

Identifying which bands are dominant provides clinical information about brain state that is not accessible from the time-domain waveform alone.

Vibration analysis. Rotating machinery develops characteristic fault signatures at specific harmonic frequencies. Monitoring the frequency spectrum of a machine's vibration signal over time reveals developing faults before they cause failure.

Communications. Wireless systems allocate specific frequency bands to different services to prevent interference. Modulation schemes such as AM and FM are designed to place information-bearing signals within assigned bands; signal processing at the receiver extracts the information by operating selectively in the frequency domain. The details of modulation belong to a later communications course; the frequency-domain perspective introduced here is the prerequisite.

Filter design. Filters are circuits designed to pass signals within a defined frequency band while attenuating signals outside it. Their behaviour is described entirely in the frequency domain, through a frequency response function $H(\omega)$ of the type introduced in Section 6.5. Chapter 9 develops the theory and design of filters in detail.

Chapter Summary

This chapter has developed the frequency-domain view of signals, starting from the simplest case of a single harmonic and building to the general representation of arbitrary periodic and aperiodic signals.

- The **time domain** and the **frequency domain** are equivalent, complementary representations of the same signal.
- A harmonic signal at frequency f_0 appears in the frequency domain as a single **spectral line** at f_0.
- The **Fourier Series** states that any periodic signal with period T can be expressed as a sum of harmonics at integer multiples of the fundamental frequency $f_0 = 1/T$. The spectrum is *discrete*.
- Different waveforms have characteristic spectra. Square and sawtooth waves contain harmonics with amplitudes decaying as $1/n$; triangle waves decay faster as $1/n^2$; the square wave and triangle wave contain only odd harmonics.
- **Aperiodic signals** do not have a fundamental frequency. Their spectra are *continuous*. The relevant mathematical tool is the **Fourier Transform**. Shorter signals in time have broader spectra in frequency.
- A **linear system** satisfies homogeneity and superposition. Because any signal is a sum of harmonics, a linear system's response to a complex input is found by analysing each harmonic separately and summing the results. This is the foundation of AC analysis in Chapter **??**.

Table 6.3: Key formulas and definitions from Chapter 6.

Concept	**Expression**	**Notes**
Fundamental frequency	$f_0 = 1/T$	T = period
Fourier Series	$f(t) = \sum_{n=-\infty}^{\infty} C_n e^{j\omega_0 nt}$	Periodic signals
Angular fundamental frequency	$\omega_0 = 2\pi f_0 = 2\pi/T$	
Fourier coefficients	$C_n = \frac{1}{T}\int_0^T f(t)e^{-j\omega_0 nt}\,dt$	C_n complex
Fourier Transform	$F(\omega) = \int_{-\infty}^{\infty} f(t)e^{-j\omega t}\,dt$	Aperiodic signals
Inverse Fourier Transform	$f(t) = \frac{1}{2\pi}\int_{-\infty}^{\infty} F(\omega)e^{j\omega t}\,d\omega$	

Chapter 7

Circuits that Remember

This chapter introduces inductors and capacitors, two fundamental circuit elements that exhibit dynamic behavior, unlike resistors. It explains how inductors store energy in a magnetic field and resist changes in current, while capacitors store energy in an electric field and resist changes in voltage. The chapter analyzes the behavior of inductors and capacitors when a DC voltage is suddenly applied, exploring the transient response and the concept of the time constant. It also details how to calculate total inductance and capacitance for series and parallel combinations and concludes by highlighting the duality between inductors and capacitors and their importance in electronic circuits.

Learning Objectives:

- Understand the fundamental properties of inductors and capacitors, including how inductors resist changes in current while capacitors resist changes in voltage.
- Analyze the transient response of RL and RC circuits to DC step inputs, including the significance of the time constant.
- Calculate total inductance and capacitance for series and parallel combinations of components.
- Explain energy storage in inductors (magnetic fields) and capacitors (electric fields) and determine the amount of energy stored.
- Interpret the duality between inductors and capacitors, including their complementary behaviors in circuit analysis.

The preceding chapters have examined circuits with steady DC voltages and currents, where resistors follow Ohm's law consistently. Real-world circuits, however, often involve signals that change over time. Two new components, inductors and capacitors, are essential for these dynamic circuits but behave very differently from resistors.

Inductors and capacitors are the "memory elements" of electronics. While resistors simply resist current flow, inductors and capacitors can store energy and release it later, giving circuits the ability to respond to changes over time. This property makes them fundamental building blocks for many everyday applications, including filtering unwanted signals in audio equipment, storing energy in power supplies, creating timing circuits in computers, and coupling signals between circuit stages.

This chapter explores what happens when inductors and capacitors are connected to a DC voltage that suddenly turns on, a so-called "step" input.[1] These components initially resist change, but in different ways, creating interesting "transient" behaviors before eventually settling into a steady state.

Both components store energy, but in different forms: inductors store energy in magnetic fields, while capacitors store energy in electric fields.

For clarity when discussing time-varying quantities, the following notation is used throughout:

1. A lowercase letter (like i for current) represents the general case, which may or may not vary with time.
2. A lowercase letter with (t), such as $i(t)$, explicitly shows time dependence.
3. An uppercase letter (like I) indicates a constant value that does not change with time.

7.1 Step Functions: Modeling Switches in Circuits

Podcast: Step Function

Before exploring how inductors and capacitors behave, we need a way to mathematically describe a switch being flipped on or off. In practice, this is straightforward: flip a switch and a circuit turns on. To analyze circuits mathematically, however, we need a precise way to represent this action.

This is where the **Heaviside step function** (or simply the "step function") comes in. Think of it as a mathematical light switch that turns on at a specific moment in time. Written as $h(t)$, it is defined as:

$$h(t) = \begin{cases} 0 & \text{when } t < 0 \text{ (switch is OFF)} \\ 1 & \text{when } t \geq 0 \text{ (switch is ON)} \end{cases}$$

The step function equals 0 for all time before $t = 0$ (representing "OFF"), and equals 1 for all time at and after $t = 0$ (representing "ON").

Step functions are particularly useful because they can be combined to model more complex switching behaviors. For example, consider a signal that turns ON at $t = 0$ and then turns OFF again at time $t = 6\tau$ (where τ is the time constant introduced in the following sections). This can be represented by combining two step functions: $h(t) - h(t - 6\tau)$. The first term $h(t)$ turns

[1] In a subsequent chapter, we will investigate how inductors and capacitors behave when driven by periodically varying sinusoidal signals.

the signal ON at $t = 0$. The second term $h(t - 6\tau)$ would normally turn a signal ON at $t = 6\tau$, but because it is subtracted, it turns the signal OFF at that time instead.

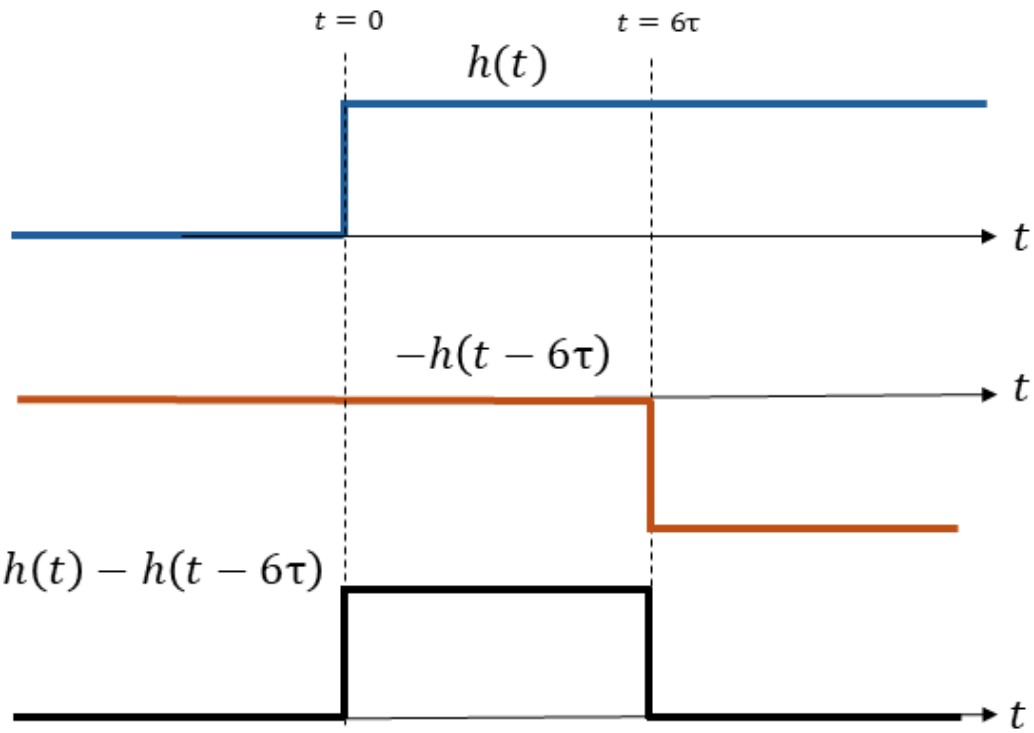

Figure 7.1: Creating a pulse signal: The blue curve shows $h(t)$ turning ON at $t = 0$. The red curve shows $h(t - 6\tau)$ turning ON at $t = 6\tau$. Subtracting them to obtain $h(t) - h(t - 6\tau)$ produces a pulse that turns ON at $t = 0$ and OFF at $t = 6\tau$.

7.2 Ideal Inductor: The Magnetic Energy Storage Element

Podcast: Inductors

7.2.1 How Inductors Work: The Magnetic Connection

The inductor is one of the simplest yet most fascinating components in electronics. It is based on a fundamental principle of electromagnetism: **when electric current flows through a wire, it creates a magnetic field around that wire**.

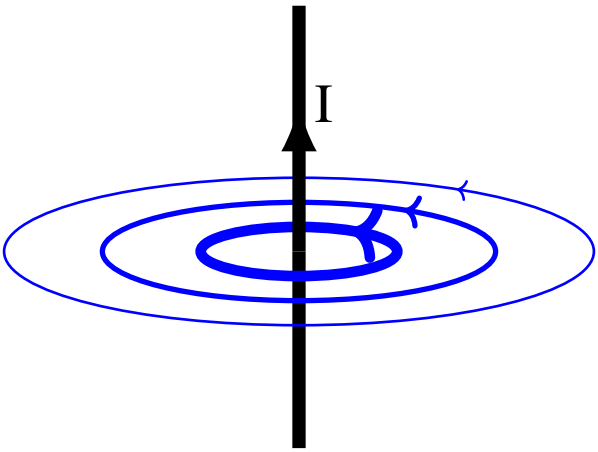

Figure 7.2: When current flows through a wire, it creates a magnetic field that circles around the wire. The field is strongest near the wire (shown by thicker lines) and weakens with distance. The field direction follows the right-hand rule: point the thumb in the direction of current flow, and the curled fingers indicate the direction of the magnetic field.

An inductor takes advantage of this effect by coiling the wire many times. This concentrates the magnetic field, making it much stronger, and allows the inductor to store energy in this magnetic field.

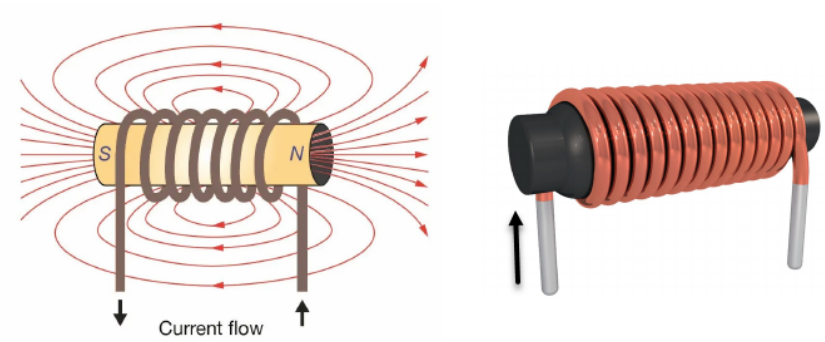

Figure 7.3: An inductor is typically a coil of wire, sometimes wrapped around a core material. The magnetic field produced by an inductor is illustrated on the left. The coil shape concentrates the magnetic field inside the coil. To determine its direction, apply the right-hand rule: curl the fingers in the direction of current flow through the coil, and the thumb points in the direction of the magnetic field inside the inductor. Image adapted from www.iqsdirectory.com

Figure 7.4: Circuit symbol for an inductor. The loops in the symbol represent a coil of wire.

7.2.2 Inductance: Measuring an Inductor's Strength

Each inductor has a property called **inductance**, measured in units called henrys (H). Inductance describes how effectively the inductor creates a magnetic field and stores energy when current flows through it. Most practical inductors have values in millihenrys (mH) or microhenrys (μH).

For a coil-shaped inductor (solenoid), the inductance can be approximated by:

$$L = \frac{\mu N^2 A}{l} \tag{7.1}$$

Where:

- L is the inductance in henrys (H)
- μ is the permeability of the core material (a measure of how well it supports magnetic fields)
- N is the number of turns in the coil
- A is the cross-sectional area of the coil
- l is the length of the coil

This equation reveals several important relationships: inductance increases with the **square** of the number of turns (N^2); larger diameter coils (bigger A) have more inductance; shorter coils (smaller l) have more inductance; and using a magnetic core material (higher μ) greatly increases inductance.

7.2.3 The Fundamental Property of Inductors

The most important characteristic of an inductor is this: **an inductor resists changes in current**. This is described mathematically by the voltage-current relationship:

$$v = L\frac{di}{dt} \tag{7.2}$$

This equation states that the voltage (v) across an inductor depends on how quickly the current is changing ($\frac{di}{dt}$); larger inductance (L) means larger voltage for the same rate of current change; if the current is constant ($\frac{di}{dt} = 0$), the voltage across the inductor is zero; and if the current is changing rapidly, the voltage can be very large.

This is what makes inductors behave so differently from resistors. While a resistor's voltage depends on the current itself ($v = iR$), an inductor's voltage depends on how quickly the current is changing, giving inductors their characteristic time-dependent behavior.

7.2.4 Inductors in Series and Parallel

Just like resistors, inductors can be combined in series or parallel to obtain different total inductance values.

Inductors in Series

When inductors are connected one after another in series, the total inductance is simply the sum of the individual inductances:

$$L_{total} = L_1 + L_2 + L_3 + \dots \tag{7.3}$$

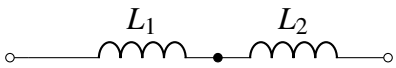

Figure 7.5: Inductors in series. The total inductance is $L_{total} = L_1 + L_2$, analogous to resistors in series.

Physically, connecting two inductors in series is like making one longer coil, which increases the total inductance.

Inductors in Parallel

When inductors are connected in parallel (with the same voltage across them), the total inductance follows the reciprocal formula:

$$\frac{1}{L_{total}} = \frac{1}{L_1} + \frac{1}{L_2} + \frac{1}{L_3} + \dots \tag{7.4}$$

For two inductors, this simplifies to:

$$L_{total} = \frac{L_1 L_2}{L_1 + L_2} \tag{7.5}$$

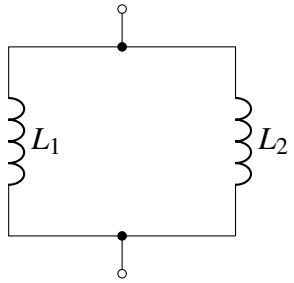

Figure 7.6: Inductors in parallel. The total inductance follows $\frac{1}{L_{total}} = \frac{1}{L_1} + \frac{1}{L_2}$, analogous to resistors in parallel.

The total inductance of inductors in parallel is always less than the smallest individual inductor, mirroring the behavior of resistors in parallel.

Summary of Inductor Combinations

Inductors in series add directly (like resistors in series), while inductors in parallel follow the reciprocal formula (like resistors in parallel).

7.3 What Happens When We Suddenly Apply Voltage to an Inductor?

Podcast: Current Step Response of RL Circuit

7.3.1 The Key Property: Inductors Resist Changes in Current

The most important thing to remember about inductors is this: **inductors resist changes in current**. Not the current itself, but changes in current. This seemingly simple property leads to some fascinating behavior when voltage is suddenly applied or removed.

Note

Unlike a resistor, which immediately allows current proportional to the applied voltage, an inductor initially blocks current flow when voltage is first applied, then gradually allows current to increase.

7.3.2 Physical Explanation: Why Inductors Resist Current Changes

To understand why inductors behave this way, consider what happens when current starts flowing through an inductor:

- When voltage is first applied, current begins to flow and creates a magnetic field.
- This changing magnetic field induces a voltage in the coil itself (self-induction).
- According to **Lenz's Law**, this induced voltage opposes the change that created it.
- This opposing voltage initially prevents the current from increasing rapidly.

7.3.3 Helpful Analogies to Understand Inductor Behavior

The Flywheel Analogy: Think of an inductor like a heavy flywheel. It takes significant effort (voltage) to start the flywheel spinning (increase current). Once spinning at constant speed (steady current), it requires no effort to maintain. If the spinning is interrupted suddenly (current reduced), the flywheel resists by pushing back. A heavier flywheel (larger inductance) resists changes more strongly.

The Water Pipe Analogy: Imagine water flowing through a pipe fitted with a heavy paddle wheel. When the valve is first opened (voltage applied), the wheel's inertia prevents immediate flow, and the flow gradually increases as the wheel speeds up. Once flowing steadily, the wheel spins at constant speed. If the valve is suddenly closed, the wheel's momentum continues to push water through.

7.3.4 Analyzing an RL Circuit Step Response

Consider what happens in a specific circuit when voltage is suddenly applied. The RL circuit (a resistor and inductor connected in series) is shown in Figure 7.7.

- The DC voltage source is 1 V.
- The resistor is 100 Ω.
- The inductor is 1 mH (millihenry).
- The switch closes at time $t = 0$ (turning the circuit ON).
- The switch opens at time $t = 6\tau$ (turning the circuit OFF).

The input voltage can be described mathematically as:

$$v_{in}(t) = V_o\left[h(t) - h(t - 6\tau)\right]$$

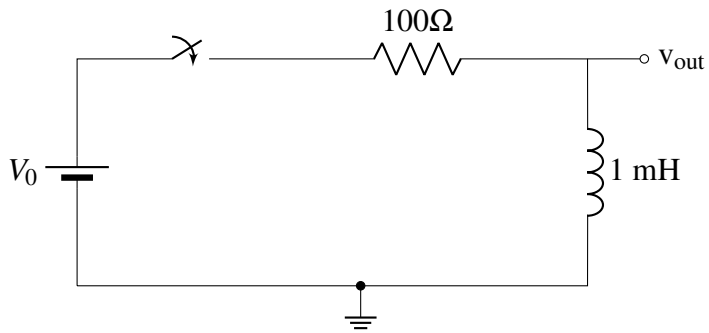

Figure 7.7: An RL circuit with a switch. The behavior of both the current and the voltage across the inductor is observed when the switch closes (at $t = 0$) and later opens (at $t = 6\tau$).

7.3.5 The Time Constant: How Fast Does Current Build Up?

A key concept for understanding inductor (and capacitor) behavior is the **time constant**, represented by the Greek letter tau (τ):

$$\tau = \frac{L}{R}$$

Where L is the inductance in henrys and R is the resistance in ohms.
In this example, $\tau = \frac{1\text{ mH}}{100\ \Omega} = 10$ microseconds.
The time constant describes how quickly the circuit responds:

- After 1τ, the current reaches about 63% of its final value.
- After 2τ, about 86%.
- After 3τ, about 95%.
- After 5τ, the current is within 1% of its final value.

7.3.6 What Happens When the Switch Closes?

When the switch first closes at $t = 0$, the following sequence of events occurs simultaneously:

- The full voltage initially appears across the inductor (the voltage curve jumps to 1 V).
- Initially, almost no current flows (the current curve starts at zero).
- The voltage across the inductor decreases exponentially.
- The current increases exponentially.
- Eventually, the voltage across the inductor drops to zero.
- The current reaches its maximum value of $I = V/R = 1\text{ V}/100\ \Omega = 10$ mA.

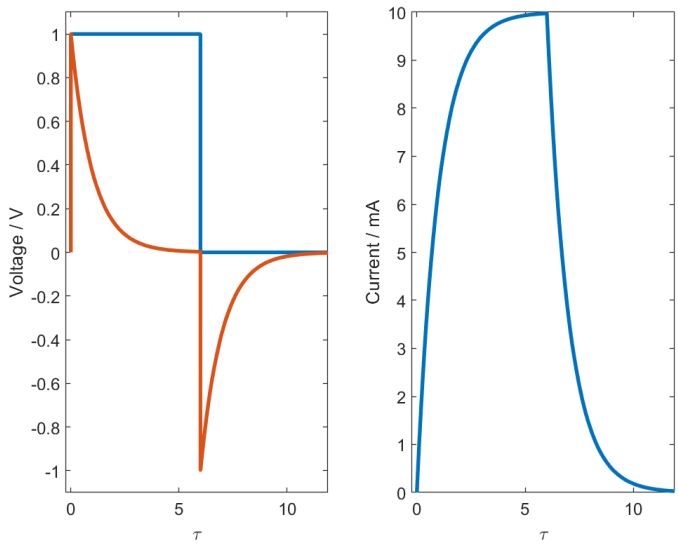

Figure 7.8: Behavior of the RL circuit when the switch is closed and later opened. **Left graph:** The blue line shows the input voltage (1 V when ON, 0 V when OFF). The red line shows the voltage across the inductor. **Right graph:** The blue line shows the current through the circuit. Notice how the current increases gradually rather than instantly.

7.3.7 Understanding Lenz's Law: The Science Behind an Inductor's Behavior

Lenz's Law explains the fundamental physics at work inside an inductor.

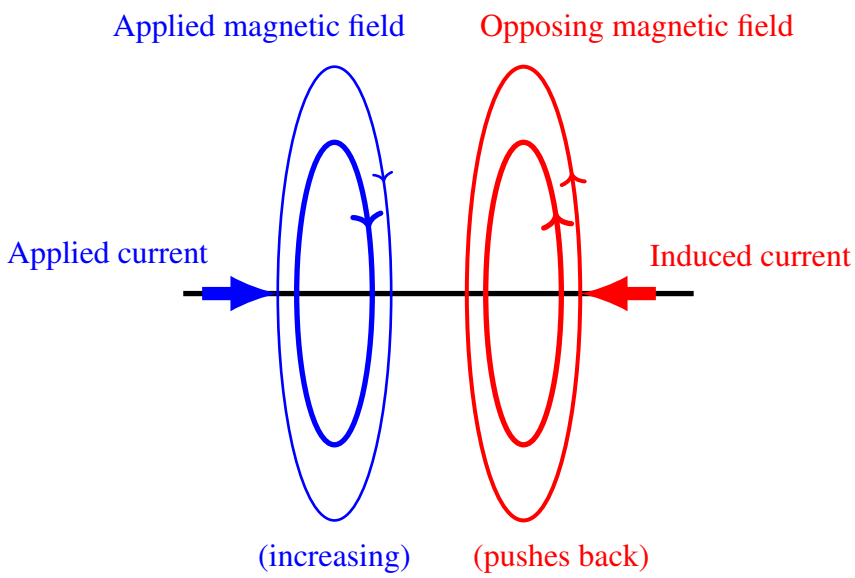

Figure 7.9: Lenz's Law in action: When the applied current (blue) starts to increase, it creates a growing magnetic field. This changing magnetic field induces a voltage in the coil that drives an opposing current (red), which tries to prevent the change by creating its own magnetic field in the opposite direction.

Lenz's Law states: When a changing magnetic field induces a current, that current flows

in a direction that creates a magnetic field opposing the change that caused it.

In practical terms, inductors "push back" against current changes. When voltage is applied to the circuit:

- The applied current begins to increase (blue in the diagram), creating a growing magnetic field.
- This increasing magnetic field induces a voltage in the coil (self-induction).
- This induced voltage drives a current in the opposite direction (red in the diagram).
- This opposing current creates an opposing magnetic field.
- The opposing field resists the increasing applied field, slowing down the current build-up.

The result is that the current does not increase instantly but instead follows an exponential curve.

7.3.8 The Mathematical Equations

When the switch closes at $t = 0$, the current through the circuit grows exponentially:

$$i(t) = \frac{V_o}{R}\left(1 - e^{-t/\tau}\right) = \frac{V_o}{R}\left(1 - e^{-tR/L}\right) \tag{7.6}$$

The voltage across the inductor decreases exponentially:

$$v_L(t) = V_o e^{-t/\tau} = V_o e^{-tR/L} \tag{7.7}$$

Where V_o is the applied voltage (1 V in this example), R is the resistance (100 Ω), L is the inductance (1 mH), $\tau = L/R$ is the time constant (10 microseconds), and e^x is the exponential function with base $e \approx 2.718$.

Note

The current builds up gradually following an exponential curve, eventually approaching the final value of $I_{final} = V_o/R$.

7.3.9 Energy Storage in the Inductor

While current is flowing through the inductor, energy is stored in its magnetic field. The energy stored at any moment is:

$$E(t) = \frac{1}{2}Li(t)^2 \tag{7.8}$$

Where $E(t)$ is the energy in joules, L is the inductance in henrys, and $i(t)$ is the current at time t in amperes.

In this example, when the current reaches its maximum value of 10 mA, the stored energy is:

$$E = \frac{1}{2} \times 1 \text{ mH} \times (10 \text{ mA})^2 = 50 \text{ nanojoules} \tag{7.9}$$

This is a small amount of energy (a nanojoule is 10^{-9} joules), but larger inductors in power applications can store significant energy.

7.3.10 What Happens When the Switch Opens?

When the switch opens at $t = 6\tau$, the energy stored in the inductor does not simply disappear. Inductors resist changes in current, so when the current is interrupted:

- The inductor generates a voltage spike in the opposite direction.
- This voltage attempts to maintain the current flow.
- The current gradually decreases exponentially.
- The energy stored in the magnetic field is released.

In practical circuits, this "back EMF" (electromotive force) can generate very high voltages when current is suddenly interrupted, sometimes causing arcing across switch contacts or damaging components. This is why flyback diodes are often used in inductive circuits to provide a safe path for this energy.

7.3.11 Inductor Behavior in DC Steady State

After the transient period (approximately 5 time constants), the circuit reaches steady state. In DC steady state:

- The current is constant at $I = V/R$.
- Since the current is not changing, $di/dt = 0$.
- The voltage across the inductor is zero ($v = L \times 0 = 0$).
- The inductor effectively behaves like a short circuit (a wire).

Caution

While an inductor behaves like a short circuit in DC steady state, it presents significant opposition to rapidly changing signals. This is why inductors are useful for filtering high-frequency signals while passing DC.

7.3.12 Summary of Inductor Step Response

When a DC voltage is applied to an RL circuit:

- **Initially** ($t = 0$): current is zero, full voltage appears across the inductor, and no energy is stored.
- **During the transient period** ($0 < t < 5\tau$): current increases exponentially, voltage across the inductor decreases exponentially, and energy accumulates in the magnetic field.
- **In steady state** ($t > 5\tau$): current reaches maximum value ($I = V/R$), voltage across the inductor is zero, the inductor behaves like a wire (short circuit), and maximum energy is stored.

7.4 Ideal Capacitor: The Electric Energy Storage Element

Podcast: Capacitors

7.4.1 How Capacitors Work: Storing Electric Charge

A capacitor is another fundamental electronic component that stores energy, but instead of storing it in a magnetic field like an inductor, a capacitor stores energy in an electric field.

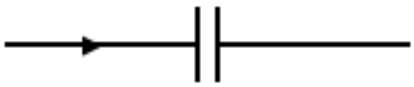

Figure 7.10: Circuit symbol for a capacitor. The two parallel lines represent the two conducting plates.

The basic structure of a capacitor is simple: two conductive plates (usually metal) separated by an insulating material called a dielectric. When a voltage is applied across these plates, electrons are pushed away from the negative terminal of the voltage source and accumulate on one plate, creating a negative charge on that plate and a positive charge on the other. This separation of charge creates an electric field between the plates, and energy is stored in this electric field.

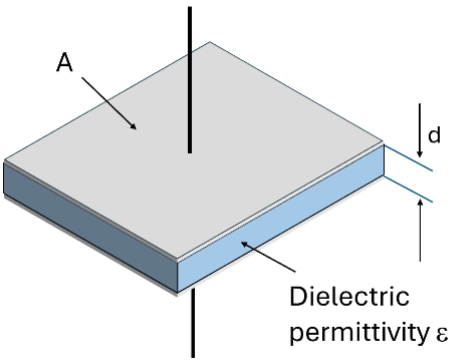

Figure 7.11: A parallel plate capacitor. When connected to a voltage source, electrons accumulate on the negative plate (left) and are pulled away from the positive plate (right), creating an electric field between them.

7.4.2 Capacitance: Measuring a Capacitor's Charge-Storing Ability

Each capacitor has a property called **capacitance**, measured in units called farads (F). Capacitance describes how much charge a capacitor can store per volt of applied voltage. One farad is an enormous capacitance in practice; most capacitors have values in microfarads (μF), nanofarads (nF), or picofarads (pF).

For a parallel plate capacitor, the capacitance is:

$$C = \frac{\varepsilon A}{d} \tag{7.10}$$

Where:

- C is the capacitance in farads (F)
- ε is the permittivity of the dielectric material
- A is the area of overlap between the plates
- d is the distance between the plates

This equation shows that larger plate area (A) increases capacitance, smaller separation distance (d) increases capacitance, and a dielectric material with higher permittivity (ε) increases capacitance.

7.4.3 The Fundamental Property of Capacitors

The most important characteristic of a capacitor is this: **a capacitor resists changes in voltage**. This is described mathematically by the voltage-current relationship:

$$i = C\frac{dv}{dt} \tag{7.11}$$

This equation states that the current (i) through a capacitor depends on how quickly the voltage is changing ($\frac{dv}{dt}$); larger capacitance (C) means larger current for the same rate of voltage change; if the voltage is constant ($\frac{dv}{dt} = 0$), the current through the capacitor is zero; and if the voltage is changing rapidly, the current can be very large.

This is what makes capacitors behave so differently from resistors. While a resistor's current depends on the voltage itself ($i = v/R$), a capacitor's current depends on how quickly the voltage is changing.

7.4.4 Helpful Analogies to Understand Capacitor Behavior

The Water Tank Analogy: Think of a capacitor like a water tank with a flexible rubber membrane in the middle. The water level represents voltage and the flow of water represents current. Pouring water in quickly (rapid voltage change) causes a large flow, but once the water level stabilizes (constant voltage), flow stops. The size of the tank represents capacitance.

The Balloon Analogy: A capacitor behaves like a balloon: it requires effort (current) to inflate initially. The more it is inflated (higher voltage), the more pressure (charge) it contains. Once fully inflated to a certain pressure, no more air flows in. When released, the stored energy is released.

7.4.5 Capacitors in Series and Parallel

Like inductors and resistors, capacitors can be combined in series or parallel. Their combination rules are the reverse of inductors, which reflects the broader duality between the two components discussed at the end of this chapter.

Capacitors in Parallel

When capacitors are connected in parallel (with the same voltage across each), the total capacitance is simply the sum of the individual capacitances:

$$C_{total} = C_1 + C_2 + C_3 + \dots \tag{7.12}$$

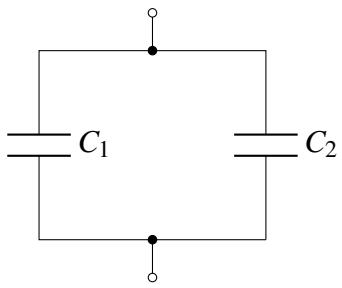

Figure 7.12: Capacitors in parallel. The total capacitance is $C_{total} = C_1 + C_2$. Connecting capacitors in parallel is physically equivalent to increasing the plate area, which increases capacitance.

Capacitors in Series

When capacitors are connected in series (where the same current must flow through each), the total capacitance follows the reciprocal formula:

$$\frac{1}{C_{total}} = \frac{1}{C_1} + \frac{1}{C_2} + \frac{1}{C_3} + \dots \tag{7.13}$$

For two capacitors, this simplifies to:

$$C_{total} = \frac{C_1 C_2}{C_1 + C_2} \tag{7.14}$$

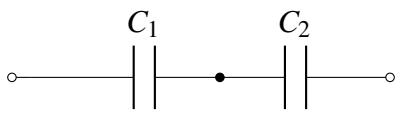

Figure 7.13: Capacitors in series. The total capacitance follows $\frac{1}{C_{total}} = \frac{1}{C_1} + \frac{1}{C_2}$. Physically, this is equivalent to increasing the separation between plates, which reduces capacitance.

The total capacitance of capacitors in series is always less than the smallest individual capacitor, because series connection is equivalent to increasing the plate separation distance.

Comparison of Component Combination Rules

The following table summarizes how resistors, inductors, and capacitors combine in series and parallel:

Component	**Series Connection**	**Parallel Connection**
Resistors	$R_{\text{total}} = R_1 + R_2$	$\frac{1}{R_{\text{total}}} = \frac{1}{R_1} + \frac{1}{R_2}$
Inductors	$L_{\text{total}} = L_1 + L_2$	$\frac{1}{L_{\text{total}}} = \frac{1}{L_1} + \frac{1}{L_2}$
Capacitors	$\frac{1}{C_{\text{total}}} = \frac{1}{C_1} + \frac{1}{C_2}$	$C_{\text{total}} = C_1 + C_2$

7.5 What Happens When We Suddenly Apply Voltage to a Capacitor?

Podcast: Voltage Step Response of RL Circuit

7.5.1 The Key Property: Capacitors Resist Changes in Voltage

Just as inductors resist changes in current, **capacitors resist changes in voltage**. Not the voltage itself, but changes in voltage. When a voltage is suddenly applied to a capacitor, the voltage across it cannot change instantaneously; it must increase gradually.

Note

When voltage is first applied to a capacitor, the capacitor initially looks like a short circuit (allowing current to flow easily), then gradually builds up a voltage across its terminals as it charges, eventually becoming an open circuit (blocking current flow).

7.5.2 Analyzing an RC Circuit Step Response

Consider what happens in a specific circuit when voltage is suddenly applied. The RC circuit (a resistor and capacitor connected in series) is shown in Figure 7.14.

- The DC voltage source is 1 V.
- The resistor is 10 kΩ.
- The capacitor is 1 μF.
- The switch closes at time $t = 0$ (turning the circuit ON).
- The switch opens at time $t = 6\tau$ (turning the circuit OFF).

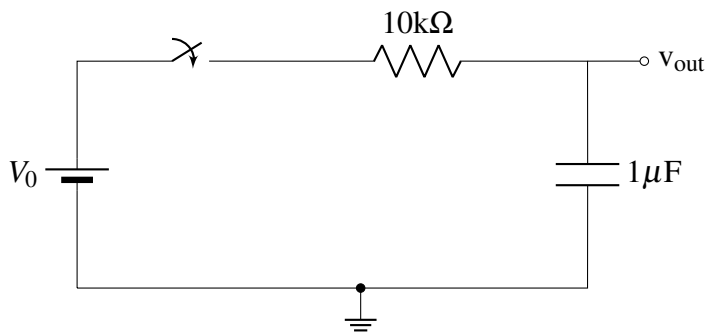

Figure 7.14: An RC circuit with a switch. The behavior of both the current and the voltage across the capacitor is observed when the switch closes (at $t = 0$) and later opens (at $t = 6\tau$).

7.5.3 The Time Constant: How Fast Does Voltage Build Up?

Just like with inductors, the time constant (τ) describes how quickly the capacitor charges or discharges. For a capacitor:

$$\tau = RC$$

Where R is the resistance in ohms and C is the capacitance in farads.
In this example, $\tau = 10\ \text{k}\Omega \times 1\ \mu\text{F} = 10$ milliseconds.
The time constant describes the circuit's response:

- After 1τ, the capacitor voltage reaches about 63% of its final value.
- After 2τ, about 86%.
- After 3τ, about 95%.
- After 5τ, the voltage is within 1% of its final value.

7.5.4 What Happens When the Switch Closes?

When the switch first closes at $t = 0$:

- The capacitor voltage is zero (it cannot change instantaneously).
- The current is maximum at the start ($I = V/R = 1\ \text{V}/10\ \text{k}\Omega = 0.1$ mA).
- The capacitor begins to charge and its voltage increases gradually.
- As the capacitor charges, the current decreases.
- Eventually, the capacitor is fully charged to the source voltage (1 V).
- The current drops to zero and the capacitor effectively becomes an open circuit.

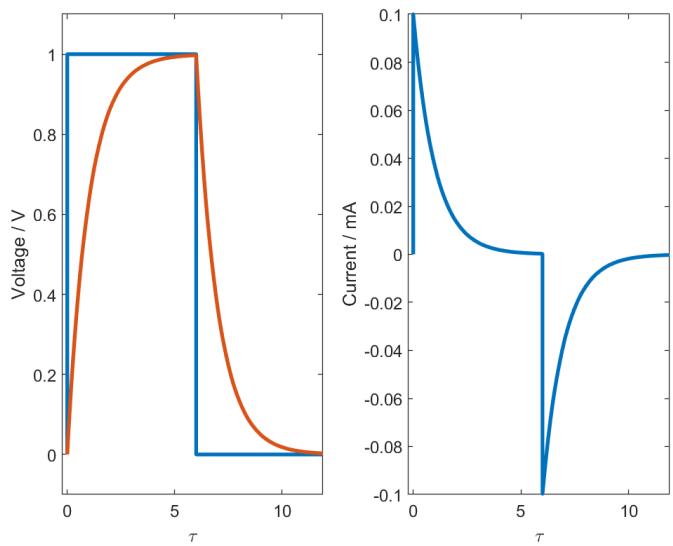

Figure 7.15: Behavior of the RC circuit when the switch is closed and later opened. **Left graph:** The blue line shows the input voltage (1 V when ON, 0 V when OFF). The red line shows the voltage across the capacitor, which increases gradually. **Right graph:** The blue line shows the current through the circuit, which is highest when the capacitor is charging most rapidly.

7.5.5 Physical Explanation: Why Capacitors Behave This Way

To understand why capacitors behave this way, consider what is physically happening:

- When voltage is first applied, electrons begin to flow toward one plate and away from the other.
- As charge accumulates on the plates, an electric field builds between them.
- This electric field creates a voltage that opposes the applied voltage.
- As more charge accumulates, this opposing voltage increases.
- When the opposing voltage equals the applied voltage, current stops flowing.

The process is similar to filling a water tank through a narrow pipe: the flow is fastest when the tank is empty and decreases as the tank fills.

7.5.6 The Mathematical Equations

When the switch closes at $t = 0$, the voltage across the capacitor increases exponentially:

$$v_C(t) = V_o\left(1 - e^{-t/\tau}\right) = V_o\left(1 - e^{-t/RC}\right) \tag{7.15}$$

The current through the circuit decreases exponentially:

$$i(t) = \frac{V_o}{R}e^{-t/\tau} = \frac{V_o}{R}e^{-t/RC} \tag{7.16}$$

Where V_o is the applied voltage (1 V in this example), R is the resistance (10 kΩ), C is the capacitance (1 μF), $\tau = RC$ is the time constant (10 ms), and $e \approx 2.718$ is the base of the natural logarithm.

Note

For capacitors, current is highest at the beginning and decreases with time, while voltage starts at zero and increases. This is the opposite of an inductor's behavior, and reflects the duality between the two components.

7.5.7 Energy Storage in the Capacitor

While a capacitor is charging, energy is stored in its electric field. The energy stored at any moment is:

$$E(t) = \frac{1}{2}C\,v_C(t)^2 \tag{7.17}$$

Where $E(t)$ is the energy in joules, C is the capacitance in farads, and $v_C(t)$ is the voltage across the capacitor at time t.

In this example, when the capacitor is fully charged to 1 V, the stored energy is:

$$E = \frac{1}{2} \times 1\ \mu\text{F} \times (1\ \text{V})^2 = 0.5\ \mu\text{J} \tag{7.18}$$

7.5.8 What Happens When the Switch Opens?

When the switch opens at $t = 6\tau$, the capacitor is fully charged to 1 V. With no path for the charge to flow, the capacitor maintains its voltage indefinitely in an ideal circuit. In a real circuit, charge will eventually leak through the dielectric or other components.

If a resistor is connected across the capacitor (creating a discharge path), the capacitor discharges exponentially with the same time constant $\tau = RC$:

$$v_{cap}(t) = V_o e^{-(t-6\tau)/RC}$$

The discharge current is:

$$i(t) = -\frac{V_0}{R} e^{-(t-6\tau)/RC}$$

The negative sign indicates that the current flows in the opposite direction during discharge.

7.5.9 Capacitor Behavior in DC Steady State

After the transient period (approximately 5 time constants), the circuit reaches steady state. In DC steady state:

- The capacitor voltage equals the source voltage.
- Since the voltage is not changing, $dv/dt = 0$.
- The current through the capacitor is zero ($i = C \times 0 = 0$).
- The capacitor effectively behaves like an open circuit (a break in the wire).

Caution

While a capacitor behaves like an open circuit in DC steady state, it allows current to flow when signals are changing rapidly. This is why capacitors are useful for blocking DC while passing AC signals.

7.5.10 Displacement Current: Maxwell's Insight

A natural question arises: if no electrons actually cross the dielectric insulator between the plates, how can current be said to flow through a capacitor?

This puzzle led James Maxwell to introduce the concept of "displacement current." He recognized that a changing electric field acts like a current, creating magnetic effects just as a real current would. When a capacitor is charging or discharging, the changing electric field between the plates constitutes what is called displacement current.

This concept proved crucial for Maxwell's equations that unified electricity and magnetism, ultimately predicting the existence of electromagnetic waves such as light and radio waves.

7.5.11 Summary of Capacitor Step Response

When a DC voltage is applied to an RC circuit:

- **Initially** ($t = 0$): capacitor voltage is zero, current is maximum ($I = V/R$), and no energy is stored.
- **During the transient period** ($0 < t < 5\tau$): voltage increases exponentially, current decreases exponentially, and energy accumulates in the electric field.
- **In steady state** ($t > 5\tau$): voltage reaches the source voltage, current drops to zero, the capacitor behaves like an open circuit, and maximum energy is stored.

Chapter Summary

- **Inductors and capacitors are energy storage elements.** Unlike resistors, which dissipate energy, inductors store energy in a magnetic field and capacitors store energy in an electric field. This stored energy can later be returned to the circuit, giving these components their characteristic memory-like behavior.

- **An inductor resists changes in current.** The governing relationship $v = L\,di/dt$ means the voltage across an inductor is proportional to the *rate of change* of current, not the current itself. Constant current produces zero voltage; rapidly changing current produces large voltage.

- **A capacitor resists changes in voltage.** The governing relationship $i = C\,dv/dt$ means the current through a capacitor is proportional to the *rate of change* of voltage. Constant voltage produces zero current; rapidly changing voltage produces large current.

- **The step function models a closing switch.** The Heaviside step function $h(t)$ equals 0 before $t = 0$ and 1 at and after $t = 0$. Combining two step functions, $h(t) - h(t - t_1)$, models a switch that closes at $t = 0$ and opens at $t = t_1$.

- **Transient responses are exponential.** When a DC voltage is suddenly applied, both RL and RC circuits respond exponentially, governed by the time constant τ. After approximately 5τ, the transient has decayed and the circuit is in steady state.

- **DC steady state has a simple rule.** Once all transients have settled, $di/dt = 0$ for an inductor (voltage across it is zero, so it behaves like a short circuit) and $dv/dt = 0$ for a capacitor (current through it is zero, so it behaves like an open circuit).

- **Inductors and capacitors are duals of each other.** Every property of one component has a precise counterpart in the other: current and voltage swap roles, series and parallel combination rules are reversed, and the DC steady-state behaviors are opposite. This duality is one of the most elegant structural features of circuit analysis.

- **Series and parallel combinations follow opposite rules.** Inductors combine like resistors (series: add; parallel: reciprocal sum). Capacitors do the reverse (parallel: add; series: reciprocal sum).

- **Looking ahead.** The behavior studied here applies to DC step inputs. When inductors and capacitors are driven by sinusoidal signals, a richer set of phenomena emerges, including impedance, resonance, and frequency-selective filtering. These are the subjects of the following chapters.

Table 7.1: Key formulas and definitions from Chapter 7.

Concept	**Inductor**	**Capacitor**	**Notes**
V-I relationship	$v = L\dfrac{di}{dt}$	$i = C\dfrac{dv}{dt}$	Fundamental property
Time constant	$\tau = L/R$	$\tau = RC$	$\approx 5\tau$ to steady state
Step response	$i(t) = \dfrac{V_o}{R}\left(1 - e^{-tR/L}\right)$	$v_C(t) = V_o\left(1 - e^{-t/RC}\right)$	Switch closes at $t = 0$
Stored energy	$E = \dfrac{1}{2}Li^2$	$E = \dfrac{1}{2}Cv^2$	Joules
DC steady state	Short circuit ($v = 0$)	Open circuit ($i = 0$)	After $\approx 5\tau$
Series combination	$L_{\text{total}} = L_1 + L_2$	$\dfrac{1}{C_{\text{total}}} = \dfrac{1}{C_1} + \dfrac{1}{C_2}$	
Parallel combination	$\dfrac{1}{L_{\text{total}}} = \dfrac{1}{L_1} + \dfrac{1}{L_2}$	$C_{\text{total}} = C_1 + C_2$	

Chapter 8

The Imaginary Made Useful

This chapter introduces complex numbers and phasors as essential mathematical tools for analyzing AC circuits, where voltages and currents vary sinusoidally with time. It explains complex numbers, their rectangular and polar forms, and the algebraic operations of addition, subtraction, multiplication, and division. The chapter then introduces phasors, demonstrating how they represent sinusoidal signals in compact form and convert time-varying differential equations into algebraic equations. It also covers the visualization of phasors as rotating vectors and the calculation of time averages of time-harmonic signals.

Learning Objectives:

- Define complex numbers and explain their representation in rectangular and polar forms.
- Perform the basic algebraic operations (addition, subtraction, multiplication, division) with complex numbers.
- Explain the concept of a phasor and how it represents a sinusoidal signal.
- Convert between time-harmonic signals and their phasor representations.
- Use phasors to simplify AC circuit analysis, including differentiation and time averaging.

Up until now, the circuits examined in this book have been DC circuits, where voltages and currents remain constant over time. In the real world, however, many signals change with time, and a particularly important family of time-varying signals takes the form of sine and cosine waves. The electrical power delivered to a home is one familiar example: it is an AC (alternating current) signal that oscillates at 60 Hz in the United States.

How does one analyze circuits driven by oscillating signals? This is where complex numbers and phasors become indispensable. They are the mathematical tools that bring AC circuit analysis within reach.

Despite their name, complex numbers actually *simplify* work with AC signals. The complex plane is similar to the XY plots used when measuring IV curves in the laboratory, and that familiarity will help in visualizing the concepts that follow.

Sinusoidal signals and the Fourier Transform appeared in Chapters 5 and 6, where signals were decomposed into sine and cosine components. Chapter 7 showed how inductors and capacitors respond during transient events. Complex numbers and phasors tie those concepts together and provide a unified framework for understanding circuit behavior when signals vary continuously with time.

This chapter introduces complex numbers as a mathematical tool, then shows how they represent sinusoidal signals as phasors: rotating vectors that reduce AC circuit analysis to straightforward algebra. Instead of solving differential equations at every step, it becomes possible to apply algebraic operations and obtain results in the phasor domain, converting back to the time domain only at the end.

8.1 Complex Numbers

Podcast: Complex Numbers

A complex number, typically written as z, combines two parts: a real part and an imaginary part. The imaginary part uses the special number j (or i in mathematics), defined as $j = \sqrt{-1}$. Although the term "imaginary" can seem off-putting, its applications in engineering are entirely real.

A complex number can be visualized in the *complex plane* (Figure 8.1). The horizontal axis represents real numbers and the vertical axis represents imaginary numbers. Think of a complex number as a vector[1] starting at the origin and pointing to the coordinate (a,b), where a is the real part and b is the imaginary part. That vector has two key characteristics:

- Its length (magnitude) r, given by $r = \sqrt{a^2+b^2}$ (the Pythagorean theorem).
- Its angle to the positive real axis, θ, given by $\theta = \tan^{-1}(b/a)$.

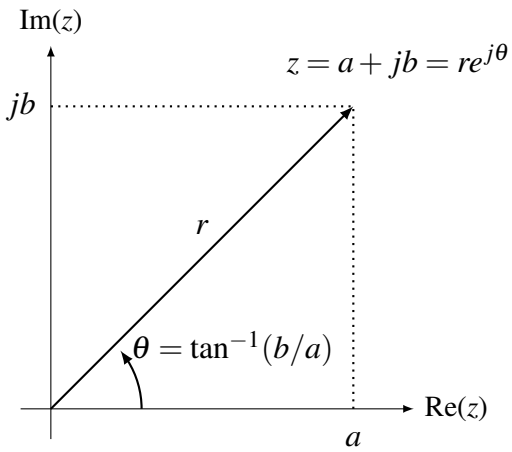

Figure 8.1: A complex number $z = a + jb = re^{j\theta}$ represented as a vector in the complex plane.

There are two common ways to represent a complex number, and proficiency with both is essential.

1. **Rectangular form:** The most direct representation,

$$z = a + jb, \tag{8.1}$$

where a is the real part and b is the imaginary part. For example, $3 + j4$ has a real part of 3 and an imaginary part of 4.

[1] A vector is a quantity that has both magnitude and direction, represented by an arrow of a specific length pointing in a specific direction.

2. **Polar form:** A representation using magnitude and angle,

$$z = re^{j\theta}, \tag{8.2}$$

where r is the magnitude and θ is the angle. This form rests on Euler's formula:

$$e^{j\theta} = \cos\theta + j\sin\theta. \tag{8.3}$$

Here e is the base of the natural logarithm (approximately 2.718). The polar form can also be written using the angle symbol: $r\angle\theta$. For example, $20e^{j\pi/4} = 20e^{j45^\circ} = 20\angle 45^\circ$.

The connection between complex exponentials and sinusoidal functions is precisely what makes complex numbers the right tool for representing AC signals.

Connecting the two forms: a complex number can be written as

$$z = a + jb = r\cos\theta + jr\sin\theta = re^{j\theta}. \tag{8.4}$$

The rectangular and polar forms are related by:

- Real part: $\mathscr{R}e\{z\} = a = r\cos\theta$
- Imaginary part: $\mathscr{I}m\{z\} = b = r\sin\theta$
- Magnitude: $r = \sqrt{a^2+b^2}$
- Angle: $\theta = \tan^{-1}(b/a)$

Practical Tip

Learn to convert between rectangular and polar forms efficiently using a calculator. Most scientific calculators include a rectangular-to-polar conversion (often labeled R→P or x→r) and a polar-to-rectangular conversion (labeled P→R or r→x). Mastering these conversions will save time on homework and exams.

Example 1: Converting to Polar Form

Express the complex number $z = 3 + j4$ in polar form.
Solution:
Magnitude:

$$r = |z| = \sqrt{a^2+b^2} = \sqrt{3^2+4^2} = \sqrt{25} = 5.$$

Angle:

$$\theta = \tan^{-1}\left(\frac{b}{a}\right) = \tan^{-1}\left(\frac{4}{3}\right) \approx 0.93\,\text{radians} = 53.13^\circ.$$

Polar form using Euler's formula:

$$z = 5e^{j\tan^{-1}(4/3)} \approx 5e^{j0.93} = 5\angle 53.13^\circ.$$

8.1.1 Complex Conjugate

The *complex conjugate* of a number z, written z^*, is formed by changing the sign of the imaginary part:

$$z^* = (a + jb)^* = a - jb. \tag{8.5}$$

Geometrically, this is a reflection across the real axis in the complex plane. In polar form, the complex conjugate is:

$$z^* = \left(re^{j\theta}\right)^* = re^{-j\theta}. \tag{8.6}$$

Multiplying a complex number by its conjugate yields the square of the magnitude:

$$z \times z^* = (a + jb)(a - jb) = a^2 + b^2 = r^2, \tag{8.7}$$

so that $r = \sqrt{zz^*}$. This property will be particularly useful when computing power in AC circuits.

Example 2: Complex Conjugate

(a) What is the complex conjugate of $z = 3 + j4$?

$$z^* = 3 - j4.$$

(b) Find the magnitude of $z = 3 + j4$ using the complex conjugate.

$$zz^* = (3 + j4)(3 - j4) = 9 + 16 = 25, \qquad r = \sqrt{25} = 5.$$

(c) What is the complex conjugate of $z = 5e^{j\tan^{-1}(4/3)}$?

$$z^* = 5e^{-j\tan^{-1}(4/3)}.$$

8.2 Algebraic Operations with Complex Numbers

The two representations of a complex number each lend themselves to different operations. Addition and subtraction are most natural in rectangular form; multiplication and division are most natural in polar form.

8.2.1 Addition and Subtraction

Addition and subtraction follow directly in rectangular form: the real and imaginary parts are combined separately, just as vector components are combined in physics:

$$\begin{aligned} z_1 + z_2 &= (a + jb) + (c + jd) = (a + c) + j(b + d), \\ z_1 - z_2 &= (a + jb) - (c + jd) = (a - c) + j(b - d). \end{aligned}$$

For example, $(3 + j4) + (2 - j5) = (3 + 2) + j(4 - 5) = 5 - j1$.

8.2.2 Multiplication

For multiplication, polar form is the more efficient choice. Multiplying two complex numbers in polar form requires only:

1. multiplying their magnitudes, and

2. adding their angles:

$$z_1 \cdot z_2 = r_1 e^{j\theta_1} \cdot r_2 e^{j\theta_2} = r_1 r_2 \, e^{j(\theta_1+\theta_2)}.$$

For example, $2e^{j30^\circ} \cdot 3e^{j45^\circ} = 6e^{j75^\circ}$.

Multiplication is also possible in rectangular form using the distributive property and the key identity $j^2 = -1$:

$$z_1 \cdot z_2 = (a+jb)(c+jd) = ac + jad + jbc + j^2 bd = (ac-bd) + j(ad+bc).$$

This rectangular approach requires more steps, which is why polar form is preferred for multiplication.

8.2.3 Division

Division in polar form is equally direct: divide the magnitudes and subtract the denominator's angle from the numerator's angle:

$$\frac{z_1}{z_2} = \frac{r_1 e^{j\theta_1}}{r_2 e^{j\theta_2}} = \frac{r_1}{r_2} e^{j(\theta_1-\theta_2)}.$$

For example, $\dfrac{10e^{j60^\circ}}{2e^{j20^\circ}} = 5e^{j40^\circ}$.

In rectangular form, division requires eliminating the imaginary number from the denominator by multiplying numerator and denominator by the complex conjugate of the denominator:

$$\frac{z_1}{z_2} = \frac{a+jb}{c+jd} = \frac{(a+jb)(c-jd)}{(c+jd)(c-jd)} = \frac{(ac+bd)+j(bc-ad)}{c^2+d^2}.$$

The denominator c^2+d^2 is real, equal to the square of the magnitude of z_2.

Useful Shortcut: Dividing by j

A frequently encountered operation in circuit analysis is division by j. The result is:

$$\frac{1}{j} = -j.$$

This follows from multiplying numerator and denominator by $-j$:

$$\frac{1}{j} \cdot \frac{-j}{-j} = \frac{-j}{-j^2} = \frac{-j}{1} = -j,$$

or equivalently from polar form:

$$\frac{1}{j} = \frac{1}{e^{j\pi/2}} = e^{-j\pi/2} = -j.$$

Example 3: Multiplication and Division

Given $z_1 = 1 + j2$ and $z_2 = -2 - j$, calculate $z_1 \cdot z_2$ and z_1/z_2.
Solution:
First, convert to polar form:

$$z_1 = 1 + j2 = \sqrt{5}\,e^{j1.107}, \qquad z_2 = -2 - j = \sqrt{5}\,e^{-j2.678}.$$

Multiplication in rectangular form:

$$z_1 \cdot z_2 = (1 + j2)(-2 - j) = -2 - j - j4 + 2 = -j5.$$

Multiplication in polar form:

$$z_1 \cdot z_2 = \left(\sqrt{5}\,e^{j1.107}\right)\left(\sqrt{5}\,e^{-j2.678}\right) = 5\,e^{-j1.571} = -j5.$$

Note: it is helpful to recall that $\pi \approx 3.142$, so $\pi/2 \approx 1.571$.
Division in rectangular form:

$$\frac{z_1}{z_2} = \frac{1 + j2}{-2 - j} \cdot \frac{-2 + j}{-2 + j} = \frac{-4 - j3}{5} = -0.8 - j0.6.$$

Division in polar form:

$$\frac{z_1}{z_2} = \frac{\sqrt{5}\,e^{j1.107}}{\sqrt{5}\,e^{-j2.677}} = e^{j3.784} = -0.8 - j0.6.$$

8.3 Phasors: A Compact Representation for AC Signals

Podcast: Phasors

The real power of complex numbers in electrical engineering comes from their role in representing sinusoidal signals. This section introduces phasors, the concept that bridges DC and AC circuit analysis and makes AC analysis almost as straightforward as the DC analysis covered in Chapter 3.

In the work on Fourier analysis and signal processing, sinusoidal signals appeared repeatedly as the fundamental building blocks of more complex waveforms. In AC circuit analysis, these sinusoidal signals take center stage, and they have a special name: time-harmonic signals.

What is a phasor? A phasor is a complex number that represents a sinusoidal voltage or current in compact form. Instead of working with the full time-varying function at every stage, all essential information is captured in a single complex number.

Why use phasors? They simplify AC circuit analysis in three important ways:

- Time-varying differential equations become algebraic equations.
- Multiple sinusoidal signals of the same frequency can be combined easily.
- Circuit behavior becomes easier to visualize and understand.

Begin with a time-harmonic signal (a sinusoid at constant frequency):

$$v(t) = V_o \cos(\omega t + \phi). \tag{8.8}$$

Here:

- V_o is the amplitude (peak value) of the signal,
- ω is the angular frequency in radians per second ($\omega = 2\pi f$, where f is frequency in hertz),
- ϕ is the phase offset, which shifts the wave earlier or later in time.

This signal is illustrated in Figure 5.3.
Now, using Euler's formula (Equation 8.3), the cosine can be written as:

$$\begin{aligned} v(t) = V_o \cos(\omega t + \phi) &= \mathrm{Re}\left\{V_o\, e^{j(\omega t + \phi)}\right\} \\ &= \mathrm{Re}\left\{V_o\, e^{j\phi}\, e^{j\omega t}\right\} = \mathrm{Re}\left\{\mathbf{V}\, e^{j\omega t}\right\}. \end{aligned} \tag{8.9}$$

The quantity $\mathbf{V} = V_o e^{j\phi}$ is the **phasor** representing $v(t)$.[2]
The phasor $\mathbf{V}$ is a complex number that carries only the amplitude and phase information; it does not include the time-varying factor $e^{j\omega t}$. The angular frequency ω is assumed to be the same for all signals in the circuit and is therefore not stored in the phasor.
The relationship between the sinusoidal signal and its phasor is:

$$v(t) = V_o \cos(\omega t + \phi) \implies \mathbf{V} = V_o\, e^{j\phi}. \tag{8.10}$$

To form a phasor from a sinusoidal signal:

- note the cosine convention: if the signal is given as a sine, convert it using $\sin(\theta) = \cos\left(\theta - \frac{\pi}{2}\right)$;
- take the amplitude V_o;
- take the phase offset ϕ;
- combine them as $V_o e^{j\phi}$ or equivalently $V_o \angle \phi$.

To recover the time-varying signal from its phasor, multiply by $e^{j\omega t}$ and take the real part:

$$v(t) = \mathrm{Re}\left\{\mathbf{V}\, e^{j\omega t}\right\} \impliedby \mathbf{V} = V_o\, e^{j\phi}. \tag{8.11}$$

In practice, conversion back to the time domain is deferred until the very end of the analysis. All circuit operations are carried out in the phasor domain, where differential equations reduce to algebraic equations.

[2] When handwriting, a phasor is commonly written with a bar overhead, $\bar{V}$, rather than in bold.

8.3.1 Visualizing Phasors

Think of a phasor as a rotating vector in the complex plane:

- The phasor $\mathbf{V} = V_o e^{j\phi}$ sits at angle ϕ from the positive real axis.
- As time progresses, this vector rotates counterclockwise at angular frequency ω.
- The projection of the rotating vector onto the real axis gives the original cosine wave; the projection onto the imaginary axis gives the corresponding sine wave.

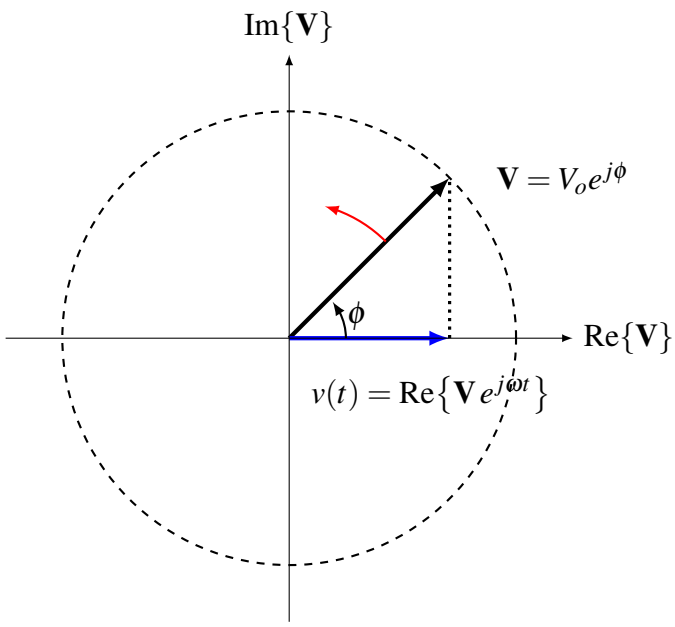

Figure 8.2: Phasor representation in the complex plane. As time increases, the phasor rotates counterclockwise at angular frequency ω, as indicated by the red arrow. The actual time-domain signal is the projection of the rotating phasor onto the real axis, shown by the blue arrow.

Figure 8.2 illustrates this concept. The red arrow indicates the direction of rotation, and the blue arrow shows how the projection onto the real axis yields the time-varying signal.

This visualization explains why signals with different phase angles have different timing relationships: if one phasor leads another in angle, that signal reaches its peak earlier in time.

8.3.2 Working with Phasors in Practice

Example 4: Sine to Phasor Conversion

Convert the time-harmonic voltage $v(t) = 100\sin(120\pi t + \pi/3)$ to phasor form.
Step 1: Convert the sine function to a cosine using $\sin(\theta) = \cos(\theta - \pi/2)$:

$$v(t) = 100\sin\left(120\pi t + \tfrac{\pi}{3}\right) = 100\cos\left(120\pi t + \tfrac{\pi}{3} - \tfrac{\pi}{2}\right) = 100\cos\left(120\pi t - \tfrac{\pi}{6}\right).$$

Step 2: Identify the amplitude and phase:

- Amplitude: 100 V
- Phase: $-\pi/6$ rad ($= -30^\circ$)

Step 3: Write the phasor:

$$\mathbf{V} = 100e^{-j\pi/6} = 100\angle(-30^\circ)\ \text{V}.$$

The frequency information ($\omega = 120\pi$ rad/s, i.e., 60 Hz) is not stored in the phasor; it is assumed to be known and shared by all signals in the circuit.

Example 5: Phasor Conversion for Current

Convert the time-harmonic current $i(t) = 10\sin(200\pi t - \pi/6)$ to phasor form.
Step 1: Convert sine to cosine:

$$i(t) = 10\sin\left(200\pi t - \tfrac{\pi}{6}\right) = 10\cos\left(200\pi t - \tfrac{\pi}{6} - \tfrac{\pi}{2}\right) = 10\cos\left(200\pi t - \tfrac{2\pi}{3}\right).$$

Step 2: Identify amplitude and phase:

- Amplitude: 10 A
- Phase: $-2\pi/3$ rad ($= -120^\circ$)

Step 3: Write the phasor:

$$\mathbf{I} = 10e^{-j2\pi/3} = 10\angle(-120^\circ)\ \text{A}.$$

The angular frequency $\omega = 200\pi$ rad/s corresponds to $f = 100$ Hz.

Example 6: Interpreting the Phase Angle

A phasor voltage is $\mathbf{V} = 20\angle 60^\circ$. What does the angle represent?
The angle of a phasor ($\phi = 60^\circ$ here) is the phase offset of the associated sinusoidal signal. It indicates when the signal reaches its peak relative to a reference cosine wave:

- This phasor represents $v(t) = 20\cos(\omega t + 60^\circ)$.
- The positive angle means this signal *leads* a zero-phase reference cosine by 60°: it reaches its peak value earlier.

Conversely, $\mathbf{V} = 20\angle(-60^\circ)$ represents a signal that *lags* the reference by 60°, reaching its peak later.
This phase relationship is central to AC circuit analysis. In an RC circuit, for example, the current across a capacitor leads the voltage by 90°.

Example 7: Adding Phasors

Add $\mathbf{V}_1 = 10\angle 30^\circ$ and $\mathbf{V}_2 = 5\angle(-45^\circ)$. Express the result in rectangular form.
Addition is performed in rectangular form.
Step 1: Convert each phasor:

$$\mathbf{V}_1 = 10\angle 30^\circ = 10\cos 30^\circ + j10\sin 30^\circ = 5\sqrt{3} + j5,$$
$$\mathbf{V}_2 = 5\angle(-45^\circ) = 5\cos(-45^\circ) + j5\sin(-45^\circ) = \tfrac{5}{\sqrt{2}} - j\tfrac{5}{\sqrt{2}}.$$

Step 2: Add:

$$\mathbf{V}_1 + \mathbf{V}_2 = \left(5\sqrt{3} + \tfrac{5}{\sqrt{2}}\right) + j\left(5 - \tfrac{5}{\sqrt{2}}\right).$$

If these were two voltage sources in series, this sum would give the total phasor voltage. The result depends on both the amplitudes and the relative phases of the two signals.

8.4 Derivatives of Time-harmonic Signals

One of the most valuable properties of the phasor representation becomes apparent when taking derivatives of time-varying signals. This is especially important because capacitors and inductors are governed by differential relationships between voltage and current.

From calculus, the time derivative of a sinusoidal signal is:

$$\frac{d}{dt} V_o \cos(\omega t + \phi) = -\omega V_o \sin(\omega t + \phi). \tag{8.12}$$

Working directly with this result can be tedious. In the phasor domain, however, taking a derivative corresponds to a simple multiplication:

$$\frac{d}{dt} v(t) \implies j\omega \mathbf{V}. \tag{8.13}$$

Whenever a time derivative of a sinusoidal signal is required, it suffices to multiply its

phasor by $j\omega$. The derivation proceeds as follows:[3]

$$\frac{d}{dt}v(t) = \frac{d}{dt}\mathrm{Re}\{\mathbf{V}e^{j\omega t}\} = \mathrm{Re}\{j\omega\mathbf{V}e^{j\omega t}\} = \mathrm{Re}\left\{j\omega V_o e^{j\phi}e^{j\omega t}\right\}$$

$$= \mathrm{Re}\{j\omega V_o\left[\cos(\omega t+\phi)+j\sin(\omega t+\phi)\right]\} = -\omega V_o\sin(\omega t+\phi). \tag{8.14}$$

Application to Circuit Components

This derivative property is central to the analysis of capacitors and inductors in the phasor domain:

For a capacitor: $i(t) = C\dfrac{dv(t)}{dt} \implies \mathbf{I} = j\omega C\mathbf{V}$

For an inductor: $v(t) = L\dfrac{di(t)}{dt} \implies \mathbf{V} = j\omega L\mathbf{I}$

These relationships lead directly to the concept of *impedance*, studied in Chapter 9. The key result is that the phasor domain converts differential relationships into algebraic ones, making circuit analysis considerably more efficient.

8.5 Time Averages of Time-harmonic Signals

Phasors also simplify the calculation of time averages, which are essential for understanding power in AC circuits.

The average value of any periodic function $f(t)$ is found by integrating over one complete period T and dividing by T:

$$\langle f(t)\rangle = \frac{1}{T}\int_0^T f(t)\,dt. \tag{8.15}$$

For a simple cosine wave $v(t) = V_o\cos(\omega t)$, this average is zero:

$$\langle v(t)\rangle = \frac{1}{T}\int_0^T V_o\cos(\omega t)\,dt = 0. \tag{8.16}$$

This result is expected: the positive and negative half-cycles cancel exactly, as shown in Figure 5.3.

Power in electrical circuits is proportional to the *square* of voltage or current: for a resistor, $p(t) = v^2(t)/R$. Squaring the cosine gives:

$$v(t)^2 = \left[V_o\cos(\omega t)\right]^2 = \frac{V_o^2}{2}\left[\cos(2\omega t)+1\right]. \tag{8.17}$$

[3] Alternative derivation:

$$\begin{aligned}\frac{d}{dt}V_o\cos(\omega t+\phi) &= -\omega V_o\sin(\omega t+\phi)\\ &= -\omega V_o\cos\left(\omega t+\phi-\tfrac{\pi}{2}\right)\\ &= \omega V_o\cos\left(\omega t+\phi+\tfrac{\pi}{2}\right)\\ &= \mathrm{Re}\{j\omega\mathbf{V}e^{j\omega t}\}.\end{aligned}$$

The squared signal has a non-zero DC offset (the constant term in the brackets), as illustrated in Figure 8.3. This is why AC power is still useful despite the voltage averaging to zero.

The time average of the squared signal is:

$$\langle v(t)^2 \rangle = \frac{1}{T}\int_0^T v(t)^2\,dt = \frac{V_o^2}{2T}\int_0^T \left[\cos(2\omega t)+1\right]dt = \frac{V_o^2}{2}. \tag{8.18}$$

Phasors allow this result to be obtained without integration. Given the phasor $\mathbf{V}$ of $v(t)$:

$$\langle v(t)^2 \rangle = \frac{V_o^2}{2} = \frac{\mathbf{V}\mathbf{V}^*}{2}. \tag{8.19}$$

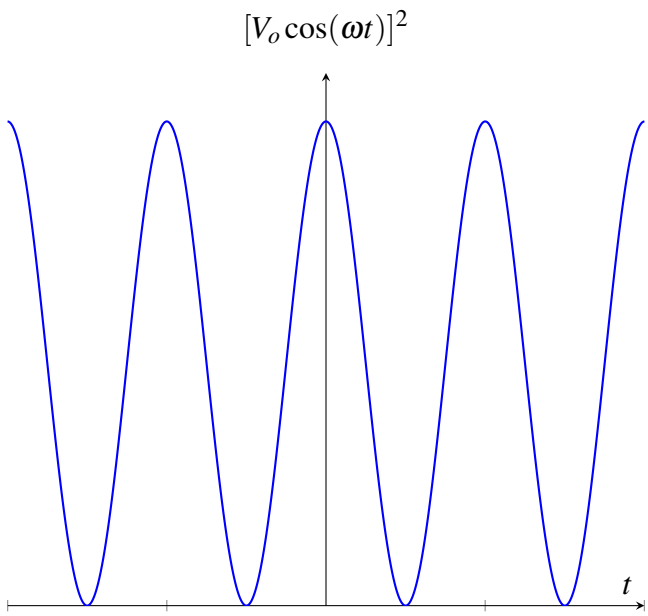

Figure 8.3: The squared time-harmonic signal $v(t)^2 = [V_o\cos(\omega t)]^2$. The non-zero average value is clearly visible.

Example 8: Average Power in a Resistor

A periodic voltage $v(t) = V_o \sin(\omega t + \phi)$ is applied to a resistor R. Find the average power dissipated.
Instantaneous power:

$$p(t) = \frac{v(t)^2}{R}.$$

Average power, using the phasor result $\langle v(t)^2 \rangle = V_o^2/2$:

$$\langle p \rangle = \frac{\langle v(t)^2 \rangle}{R} = \frac{V_o^2}{2R}.$$

For $v(t) = 10\sin(\omega t + \pi/3)$ applied to $R = 100\,\Omega$:

$$\langle p \rangle = \frac{10^2}{2 \times 100} = \frac{100}{200} = 0.5\,\text{W}.$$

This result also defines the RMS (root mean square) value of a sinusoid: since $\langle p \rangle = V_{\text{rms}}^2/R$ and $\langle p \rangle = V_o^2/(2R)$, it follows that $V_{\text{rms}} = V_o/\sqrt{2}$. The RMS value is the equivalent DC voltage that would deliver the same average power to the resistor.

Chapter Summary

This chapter has introduced two mathematical tools that are essential for AC circuit analysis: complex numbers and phasors. Complex numbers provide a compact algebraic framework for representing sinusoidal signals, while phasors exploit Euler's formula to convert time-varying differential equations into algebraic equations. Together, they extend the DC analysis techniques of Chapter 3 to circuits driven by sinusoidal sources.

The key operations and their preferred forms are:

- Addition and subtraction: use rectangular form.
- Multiplication and division: use polar form.
- Conjugate: change the sign of the imaginary part (or negate the angle in polar form).

The phasor domain is especially powerful because differentiation with respect to time becomes multiplication by $j\omega$, eliminating differential equations from routine circuit analysis. Time averages of squared signals, which determine average power, follow directly from the phasor without integration.

The next chapter applies these tools to circuits containing resistors, capacitors, and inductors driven by sinusoidal sources, introducing the concept of *impedance* and the analysis of frequency-dependent circuit behavior.

Key Formulas

Quantity	**Expression**
Rectangular form	$z = a + jb$
Polar form	$z = re^{j\theta} = r\angle\theta$
Magnitude	$r = \sqrt{a^2 + b^2}$
Angle	$\theta = \tan^{-1}(b/a)$
Euler's formula	$e^{j\theta} = \cos\theta + j\sin\theta$
Complex conjugate	$z^* = a - jb = re^{-j\theta}$
Magnitude via conjugate	$r = \sqrt{zz^*}$
Phasor (from signal)	$v(t) = V_o\cos(\omega t + \phi) \;\Rightarrow\; \mathbf{V} = V_o e^{j\phi}$
Signal (from phasor)	$v(t) = \mathrm{Re}\{\mathbf{V}\,e^{j\omega t}\}$
Derivative rule	$\dfrac{d}{dt}v(t) \;\Rightarrow\; j\omega\mathbf{V}$
Capacitor (phasor)	$\mathbf{I} = j\omega C\mathbf{V}$
Inductor (phasor)	$\mathbf{V} = j\omega L\mathbf{I}$
Mean-square value	$\langle v(t)^2\rangle = \dfrac{V_o^2}{2} = \dfrac{\mathbf{V}\mathbf{V}^*}{2}$
RMS value	$V_{\mathrm{rms}} = V_o/\sqrt{2}$

Chapter 9

The Impedance Code: AC Circuit Analysis

This chapter unifies the concepts of signals, circuits, and complex numbers to analyze circuits driven by sinusoidal sources. Phasors transform time-varying signals into fixed complex vectors, replacing calculus with algebra. Impedance extends Ohm's Law to capacitors and inductors, whose opposition to current depends on frequency. The same series, parallel, and voltage-divider techniques from DC analysis carry over directly once impedances replace resistances. The decibel scale and Bode plots provide practical tools for characterizing how circuits respond across a wide range of frequencies. Passive RC, RL, and RLC circuits then demonstrate how frequency-selective filtering arises naturally from impedance.

Learning Objectives:

- Extend DC circuit analysis techniques to AC circuits using the phasor concept.
- Explain how the frequency of the source affects component behavior in AC circuits.
- Transform time-varying sinusoidal signals into complex phasors ($A_o \cos(\omega t + \phi) \Rightarrow A = A_o e^{j\phi}$).
- Define impedance (Z) as the AC generalization of resistance and recognize its complex nature ($Z = R + jX$).
- Describe how capacitive reactance ($X_C = -1/(2\pi f C)$) and inductive reactance ($X_L = 2\pi f L$) vary with frequency.
- Apply the decibel scale and interpret Bode plots of magnitude and phase.
- Analyze passive RC, RL, and RLC filters using impedance, phasors, and the voltage-divider relationship.

The earlier chapters established two parallel threads. One thread covers circuit analysis: Kirchhoff's laws, resistor networks, and the transient responses of capacitors and inductors. The other covers signals: sinusoidal waveforms, the Fourier series, and the frequency spectrum. Chapter 8 introduced complex numbers and phasors as the mathematical bridge between these two threads. This chapter completes the crossing.

In AC analysis, circuits are driven by harmonic signals of the form $A_0 \cos(\omega t + \phi)$. Unlike DC circuits, where voltages and currents are constant, in AC circuits the frequency of the source determines how each component behaves. The central goal is to determine how a circuit modifies the amplitude and phase of a signal passing through it.

Phasors accomplish this by converting time-varying signals into fixed complex vectors in the complex plane:

$$A_o \cos(\omega t + \phi) \implies A = A_o e^{j\phi} \tag{9.1}$$

This transformation replaces time-domain differential equations with algebraic equations. The voltage-current relationships for each component become:

$$v = iR \implies V = IR \tag{9.2}$$

$$i = C\frac{dv}{dt} \implies I = j\omega CV \tag{9.3}$$

$$v = L\frac{di}{dt} \implies V = j\omega LI \tag{9.4}$$

The imaginary unit j in equations 9.3 and 9.4 encodes a 90-degree phase shift between voltage and current. For a capacitor, the $-j$ that results from rearranging equation 9.3 indicates that voltage *lags* current by 90 degrees: a capacitor stores charge proportional to voltage, so a rapidly changing voltage demands a large current before the voltage itself rises. For an inductor, the $+j$ in equation 9.4 indicates that voltage *leads* current by 90 degrees: the magnetic field storing energy must build up before current can increase, so the voltage peaks ahead of the current.

These relationships are the foundation for the rest of this chapter.

9.1 Impedance: Ohm's Law for AC Circuits

Podcast: Impedance

In the phasor domain, the voltage across every component is proportional to the current through it. This observation motivates a generalized form of Ohm's Law valid for AC circuits:

$$V = IZ \tag{9.5}$$

The quantity Z is called **impedance**. It plays the same role in AC circuits that resistance plays in DC circuits: it quantifies how strongly a component opposes the flow of current. The key distinction is that impedance is a complex number:

$$Z = R + jX \tag{9.6}$$

The real part R is the **resistance**, familiar from DC analysis. Resistance results from electron collisions within a material; it dissipates energy as heat and is independent of frequency. The imaginary part X is the **reactance**. Reactance arises from energy storage in electric or magnetic fields. Unlike resistance, reactance depends on frequency and contributes no heat loss.

The impedance of the three passive components follows directly from the phasor relationships in equations 9.2–9.4:

$$Z_R = R, \qquad Z_C = \frac{1}{j\omega C} = -\frac{j}{\omega C}, \qquad Z_L = j\omega L \tag{9.7}$$

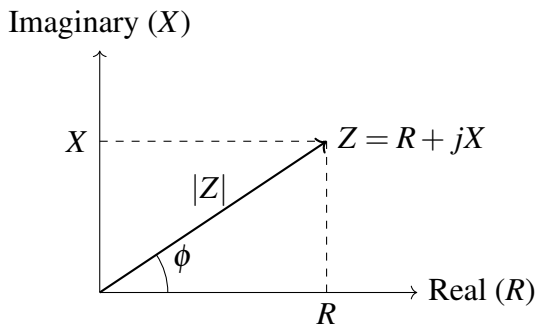

Figure 9.1: Impedance as a complex number in the complex plane. The real part R is the resistance and the imaginary part X is the reactance. The polar-form equivalents are the magnitude $|Z|$ and phase angle ϕ.

The complex nature of impedance explains why voltages and currents in AC circuits can be out of phase with each other, a phenomenon that is impossible in purely resistive circuits. The magnitude $|Z|$ determines how much the circuit reduces the amplitude of a signal; the phase angle ϕ determines how much the circuit shifts it in time.

All DC analysis techniques, including Kirchhoff's laws, series and parallel combinations, voltage dividers, and node analysis, apply unchanged to AC circuits provided that impedances replace resistances and all voltages and currents are treated as complex phasors.

Note

Impedance is the AC extension of resistance. Every technique learned for DC resistive circuits carries over to AC analysis when impedances replace resistances and all quantities are expressed as complex numbers.

9.2 Frequency Dependence of Impedance

The impedances of capacitors and inductors depend on frequency, and their behaviors are complementary opposites. This section examines each component in turn.

9.2.1 Capacitive Reactance

The impedance of a capacitor is:

$$Z_C = \frac{1}{j\omega C} \tag{9.8}$$

with magnitude:

$$|Z_C| = \frac{1}{\omega C} = \frac{1}{2\pi f C} \tag{9.9}$$

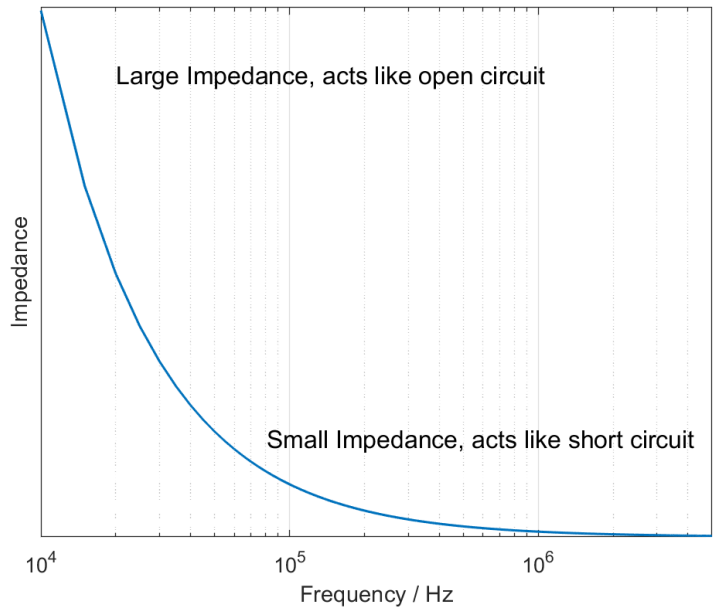

Figure 9.2: Capacitor impedance magnitude versus frequency. At low frequencies the capacitor approaches an open circuit; at high frequencies it approaches a short circuit.

At *low frequencies*, $|Z_C|$ is large: the capacitor strongly resists current flow and behaves like an open circuit. At the limiting case of direct current ($f = 0$), the impedance is infinite and the capacitor blocks current entirely after an initial transient. At *high frequencies*, $|Z_C|$ is small: the capacitor offers little opposition and behaves like a short circuit.

The capacitive reactance, the imaginary part of Z_C, is:

$$X_C = -\frac{1}{2\pi f C} \tag{9.10}$$

The negative sign encodes the phase relationship: the current through a capacitor *leads* the voltage across it by 90 degrees. The capacitor must accept charge before a voltage develops across it, so the current peaks before the voltage does.

Example Capacitor Impedance at Two Frequencies

A capacitor with $C = 1\,\mu\text{F}$ has the following impedance magnitudes:
At $f = 100\,\text{Hz}$:

$$|Z_C| = \frac{1}{2\pi \times 100 \times 10^{-6}} \approx 1{,}592\,\Omega$$

At $f = 10\,\text{kHz}$:

$$|Z_C| = \frac{1}{2\pi \times 10{,}000 \times 10^{-6}} \approx 16\,\Omega$$

A hundredfold increase in frequency reduces the impedance by the same factor, confirming the inverse relationship in equation 9.9.

9.2.2 Inductive Reactance

Inductors behave in the opposite manner to capacitors. The impedance of an inductor is:

$$Z_L = j\omega L \tag{9.11}$$

with magnitude:

$$|Z_L| = \omega L = 2\pi f L \tag{9.12}$$

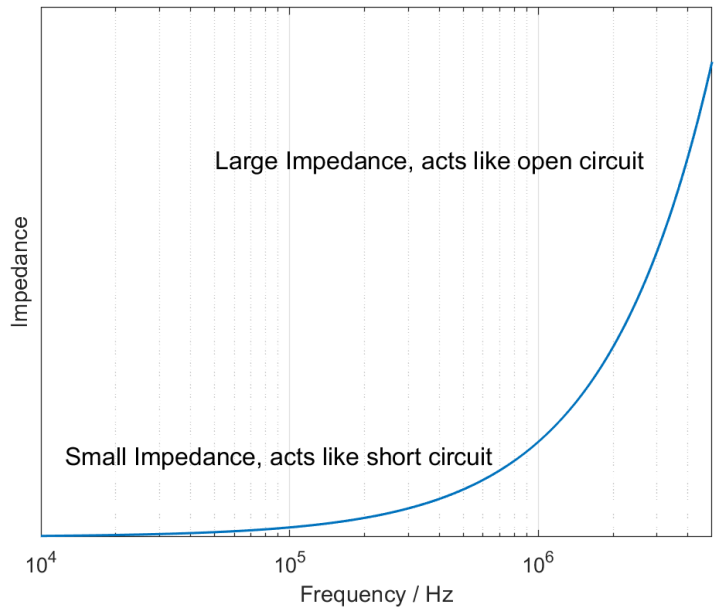

Figure 9.3: Inductor impedance magnitude versus frequency. At low frequencies the inductor approaches a short circuit; at high frequencies it approaches an open circuit.

At *low frequencies*, $|Z_L|$ is small: the inductor offers little opposition and behaves like a short circuit. For direct current ($f = 0$), an ideal inductor is simply a wire. At *high frequencies*, $|Z_L|$ is large: the inductor strongly resists changes in current and behaves like an open circuit.

The inductive reactance is:

$$X_L = 2\pi f L \tag{9.13}$$

The positive sign gives the phase relationship: the current through an inductor *lags* the voltage across it by 90 degrees. The magnetic field must be established before the current can rise, so the voltage peaks ahead of the current.

Example Inductor Impedance at Two Frequencies

An inductor with $L = 10\,\text{mH}$ has the following impedance magnitudes:
At $f = 100\,\text{Hz}$:

$$|Z_L| = 2\pi \times 100 \times 10 \times 10^{-3} \approx 6.3\,\Omega$$

At $f = 10\,\text{kHz}$:

$$|Z_L| = 2\pi \times 10{,}000 \times 10 \times 10^{-3} \approx 628\,\Omega$$

A hundredfold increase in frequency increases the impedance by the same factor, confirming the direct proportionality in equation 9.12.

Caution

Real inductors and capacitors always carry some resistance. Real inductors have winding resistance; real capacitors have leakage paths. These resistive contributions affect behavior at frequency extremes and will be apparent in laboratory measurements.

9.3 Series and Parallel Impedances

The combination rules for resistors extend directly to impedances. The only change is that the arithmetic now involves complex numbers.

9.3.1 Series Connections

Impedances in series carry the same current. Their total impedance is the sum of the individual impedances:

$$Z_{\text{total}} = Z_1 + Z_2 + \cdots \tag{9.14}$$

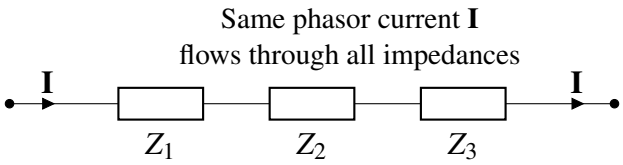

Figure 9.4: Series connection of impedances. The same phasor current flows through every element.

Because the sum involves complex numbers, the total impedance can have both a real and an imaginary part even when the individual components are purely resistive or purely reactive. For a resistor R in series with a capacitor:

$$Z_{\text{total}} = R + \frac{1}{j\omega C} = R - \frac{j}{\omega C} \tag{9.15}$$

Example Series RC Circuit

In a series circuit with $R = 100\,\Omega$ and $C = 1\,\mu\text{F}$ at $f = 1\,\text{kHz}$:

$$Z_C = \frac{1}{j \cdot 2\pi \times 1000 \times 10^{-6}} \approx -j159\,\Omega \tag{9.16}$$

$$Z_{\text{total}} = 100 - j159\,\Omega \tag{9.17}$$

$$|Z_{\text{total}}| = \sqrt{100^2 + 159^2} \approx 188\,\Omega \tag{9.18}$$

$$\phi = \tan^{-1}\left(\frac{-159}{100}\right) \approx -58^\circ \tag{9.19}$$

The negative phase angle confirms that voltage lags current by 58 degrees in this RC combination at this frequency.

9.3.2 Parallel Connections

Impedances in parallel share the same voltage. Their total impedance follows the reciprocal rule:

$$\frac{1}{Z_{\text{total}}} = \frac{1}{Z_1} + \frac{1}{Z_2} + \cdots \tag{9.20}$$

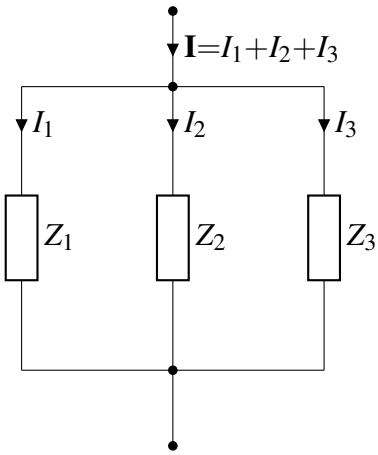

Figure 9.5: Parallel connection of impedances. The same phasor voltage appears across each element while the current divides among the branches.

Working with **admittance** $Y = 1/Z$ (measured in siemens, S) often simplifies parallel calculations, because admittances add directly:

$$Y_{\text{total}} = Y_1 + Y_2 + \cdots \tag{9.21}$$

Example Parallel RL Circuit

Consider $R = 200\,\Omega$ in parallel with $L = 50\,\text{mH}$ at $f = 1\,\text{kHz}$:

$$Z_L = j \cdot 2\pi \times 1000 \times 50 \times 10^{-3} = j314\,\Omega \tag{9.22}$$

$$Y_R = \frac{1}{200} = 5.00 \times 10^{-3}\,\text{S} \tag{9.23}$$

$$Y_L = \frac{1}{j314} = -j3.18 \times 10^{-3}\,\text{S} \tag{9.24}$$

$$Y_{\text{total}} = (5.00 - j3.18) \times 10^{-3}\,\text{S} \tag{9.25}$$

Converting back to impedance:

$$Z_{\text{total}} = \frac{1}{Y_{\text{total}}} = \frac{1}{(5.00 - j3.18) \times 10^{-3}} \tag{9.26}$$

$$= \frac{(5.00 + j3.18) \times 10^{-3}}{(5.00)^2 + (3.18)^2} \times 10^6 \approx 138 + j88\,\Omega \tag{9.27}$$

Note

For the special case of two impedances in parallel, the product-over-sum formula applies:

$$Z_{\text{total}} = \frac{Z_1 Z_2}{Z_1 + Z_2} \tag{9.28}$$

The arithmetic involves complex numbers, but the formula is structurally identical to its DC counterpart.

9.4 Impedance Voltage Divider

The voltage divider configuration carries over from DC to AC with no change in form. For a series connection of two impedances driven by a source V_{in}:

$$V_{\text{out}} = V_{\text{in}} \times \frac{Z_2}{Z_1 + Z_2} \tag{9.29}$$

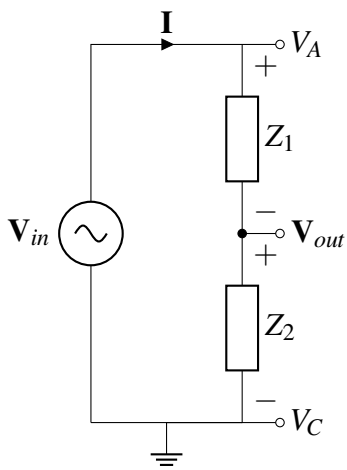

Figure 9.6: Impedance voltage divider. The output voltage $\mathbf{V}_{out}$ is taken across Z_2.

The derivation is identical to the DC case: the same current I flows through both Z_1 and Z_2; the voltage across Z_2 is $V_B = IZ_2$; and the input voltage is $V_{\text{in}} = I(Z_1 + Z_2)$. Dividing gives equation 9.29.

The critical difference from the DC case is that Z_1 and Z_2 are complex and frequency-dependent, so the output voltage amplitude and phase both vary with frequency. This frequency-selective behavior is the foundation of filtering.

Example RC Voltage Divider Across Frequencies

A voltage divider has $Z_1 = R = 1\,\text{k}\Omega$ and $Z_2 = Z_C = 1/(j\omega C)$ with $C = 1\,\mu\text{F}$. With $V_{\text{in}} = 10\,\text{V}$:
At $f = 100\,\text{Hz}$ (where $Z_C \approx -j1{,}592\,\Omega$):

$$V_{\text{out}} = 10 \times \frac{-j1592}{1000 - j1592} \approx 8.45\angle{-58^\circ}\,\text{V}$$

At $f = 10\,\text{kHz}$ (where $Z_C \approx -j15.9\,\Omega$):

$$V_{\text{out}} \approx 0.16\angle{-89^\circ}\,\text{V}$$

At low frequencies, the capacitor presents a large impedance and captures most of the source voltage. At high frequencies, the capacitor presents a small impedance and the output drops to nearly zero. The same circuit therefore attenuates high frequencies while passing low ones.

Note

The impedance voltage divider formula is structurally identical to the resistive version from DC analysis. The result is now a complex number, meaning the output voltage may have a different phase than the input. A purely resistive divider cannot produce a phase shift; a reactive divider always does.

9.5 The Decibel Scale and Bode Plots

Podcast: Passive Filters

When examining how a circuit responds across a range of frequencies, the ratio of output to input voltage, the **gain**, can span many orders of magnitude. For a typical filter, the gain might vary from nearly 1 in the passband to 10^{-4} or less deep in the stopband. Plotting such a range on a linear scale makes it nearly impossible to see the behavior near the cutoff frequency. Two tools address this problem: the decibel scale and the Bode plot.

9.5.1 The Decibel

The **decibel** (dB) expresses a ratio on a logarithmic scale. For voltage amplitudes:

$$G_{\text{dB}} = 20\log_{10}\left(\frac{|V_{\text{out}}|}{|V_{\text{in}}|}\right) \tag{9.30}$$

For power ratios the corresponding formula uses a factor of 10:

$$G_{\text{dB}} = 10\log_{10}\left(\frac{P_{\text{out}}}{P_{\text{in}}}\right) \tag{9.31}$$

The factor of 20 in the voltage form arises because power is proportional to the square of voltage: $P \propto V^2$, so $10\log_{10}(V^2) = 20\log_{10}(V)$. The two definitions are consistent for circuits

where input and output impedances are equal.

Table 9.1 lists the key reference points that appear repeatedly in filter analysis.

Table 9.1: Decibel reference values for voltage ratios.

Voltage ratio $\lvert V_{\text{out}}\rvert/\lvert V_{\text{in}}\rvert$	**Gain (dB)**	**Practical meaning**
2	$+6\,\text{dB}$	Output is double the input
$\sqrt{2}$	$+3\,\text{dB}$	Output power is doubled
1	$0\,\text{dB}$	No change
$1/\sqrt{2}$	$-3\,\text{dB}$	Output power is halved
$1/2$	$-6\,\text{dB}$	Output is half the input
$1/10$	$-20\,\text{dB}$	Output is one-tenth of input
$1/100$	$-40\,\text{dB}$	Output is one-hundredth of input

The $-3\,\text{dB}$ point is particularly important: it is the frequency at which signal power has dropped to half its maximum value, corresponding to a voltage ratio of $1/\sqrt{2} \approx 0.707$. This point defines the **cutoff frequency** of a filter and is the standard convention used in all filter specifications.

9.5.2 Bode Plots

A **Bode plot** displays the frequency response of a circuit in two panels, both plotted against a logarithmic frequency axis:

1. **Magnitude plot**: gain in dB versus $\log_{10}(f)$.

2. **Phase plot**: phase angle in degrees versus $\log_{10}(f)$.

A logarithmic frequency axis is essential because filters often operate over many decades of frequency. A linear axis from 1 Hz to 100 kHz would compress everything below 10 kHz into less than 10% of the plot width.

The slope of the magnitude response beyond cutoff is characteristic of the filter order. A first-order filter rolls off at $-20\,\text{dB}$ per decade: for every tenfold increase in f beyond f_c, the gain drops by 20 dB. Equivalently, the gain drops $-6\,\text{dB}$ per octave (every doubling of frequency). Second-order filters roll off at $-40\,\text{dB}$ per decade.

The phase response of a first-order low-pass filter starts near 0° well below cutoff, reaches exactly -45° at f_c, and approaches -90° well above cutoff. This 90° total phase shift is a fundamental property of first-order systems.

9.6 Passive Filters

A *filter* is a circuit that selectively passes or attenuates signals based on their frequency. Passive filters use only resistors, capacitors, and inductors; they require no external power supply and introduce no energy gain. The impedance voltage divider of Section 3.4 is the fundamental building block of first-order passive filters.

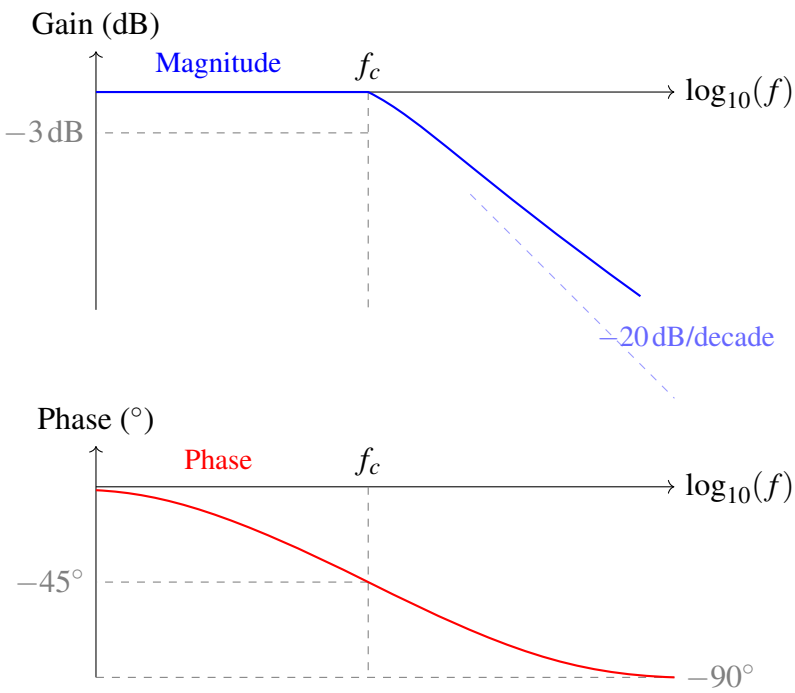

Figure 9.7: Bode plot sketch for a first-order low-pass filter. Above the cutoff frequency f_c, the magnitude decreases at $-20\,\text{dB}$ per decade and the phase approaches $-90°$.

9.6.1 Filter Types

The four standard filter types are classified by the frequencies they pass: a **low-pass filter** passes low frequencies and attenuates high frequencies; a **high-pass filter** passes high frequencies and attenuates low frequencies; a **band-pass filter** passes a defined frequency band while attenuating frequencies outside it; and a **band-stop filter** attenuates a defined band while passing frequencies on either side. This chapter focuses on low-pass and high-pass first-order filters, which are the building blocks for more complex designs.

Applications for these filter types span audio systems (bass and treble controls, crossovers), radio receivers (station selection), power supplies (ripple removal), sensor systems (noise reduction), and communication systems (channel selection). This section focuses on first-order low-pass and high-pass filters built from RC and RL networks.

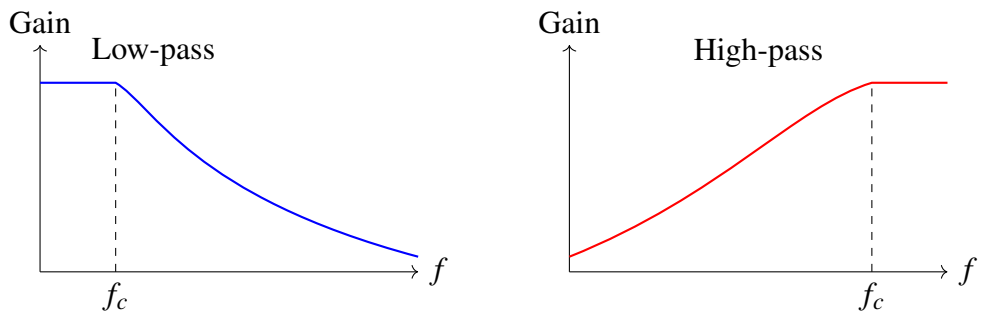

Figure 9.8: Idealized frequency response of low-pass and high-pass filters. In practice the transition from passband to stopband is gradual, with the cutoff frequency f_c defined as the $-3\,\text{dB}$ point.

9.6.2 Transfer Functions

The **transfer function** $H(j\omega)$ relates the phasor output to the phasor input across all frequencies:

$$H(j\omega) = \frac{V_{\text{out}}(j\omega)}{V_{\text{in}}(j\omega)} \tag{9.32}$$

For a first-order low-pass filter with time constant τ:

$$H_{\text{LP}}(j\omega) = \frac{1}{1 + j\omega\tau} \tag{9.33}$$

For a first-order high-pass filter:

$$H_{\text{HP}}(j\omega) = \frac{j\omega\tau}{1 + j\omega\tau} \tag{9.34}$$

In both cases the time constant τ is related to the cutoff frequency by:

$$f_c = \frac{1}{2\pi\tau} \tag{9.35}$$

At $f = f_c$, the magnitude of both transfer functions equals $1/\sqrt{2}$, corresponding to $-3\,\text{dB}$.

9.6.3 Low-Pass RC Filter

The simplest first-order low-pass filter places a resistor in series with a capacitor and takes the output across the capacitor:

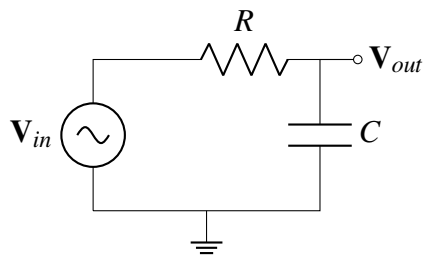

Figure 9.9: First-order low-pass RC filter. The output is taken across the capacitor.

The circuit is an impedance voltage divider with $Z_1 = R$ and $Z_2 = 1/(j\omega C)$. Applying equation 9.29:

$$V_{\text{out}} = V_{\text{in}} \times \frac{1/(j\omega C)}{R + 1/(j\omega C)} = V_{\text{in}} \times \frac{1}{1 + j\omega RC} \tag{9.36}$$

This matches equation 9.33 with $\tau = RC$, giving:

$$f_c = \frac{1}{2\pi RC} \tag{9.37}$$

At low frequencies, $|Z_C|$ is large, so most of the source voltage appears across the capacitor. At high frequencies, $|Z_C|$ is small and most of the voltage drops across R, leaving little at the output.

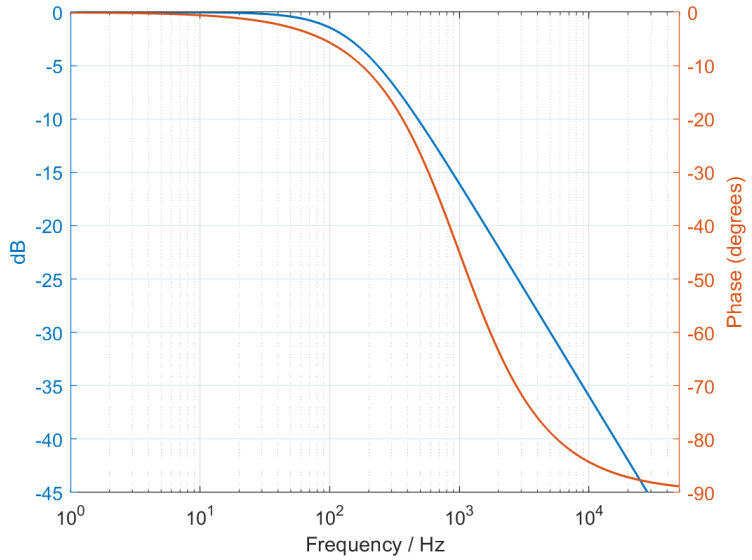

Figure 9.10: Bode plot of a first-order low-pass RC filter with $f_c = 159\,\text{Hz}$. The blue curve is the magnitude response (left axis) and the red curve is the phase response (right axis). The magnitude falls through $-3\,\text{dB}$ at f_c and rolls off at $-20\,\text{dB/decade}$ beyond.

Example Designing a Low-Pass RC Filter

To design a low-pass filter with $f_c = 1\,\text{kHz}$:

1. Choose $C = 0.1\,\mu\text{F}$ (a convenient standard value).
2. Calculate R:

$$R = \frac{1}{2\pi f_c C} = \frac{1}{2\pi \times 1000 \times 0.1 \times 10^{-6}} \approx 1.59\,\text{k}\Omega$$

3. Select the nearest standard resistor value: $1.6\,\text{k}\Omega$.

9.6.4 High-Pass RC Filter

Swapping the positions of R and C produces a high-pass filter:

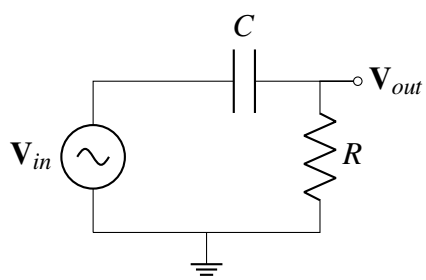

Figure 9.11: First-order high-pass RC filter. The output is taken across the resistor.

With $Z_1 = 1/(j\omega C)$ and $Z_2 = R$:

$$V_{\text{out}} = V_{\text{in}} \times \frac{R}{1/(j\omega C) + R} = V_{\text{in}} \times \frac{j\omega RC}{1 + j\omega RC} \tag{9.38}$$

This matches equation 9.34 with $\tau = RC$. The cutoff frequency is the same as for the low-pass RC filter:

$$f_c = \frac{1}{2\pi RC} \tag{9.39}$$

At low frequencies, $|Z_C|$ dominates and blocks signal from reaching the output. At high frequencies, the capacitor approximates a short circuit and the output approaches the input. A notable consequence: because a capacitor blocks DC, a high-pass filter removes any constant (DC) offset from a signal.

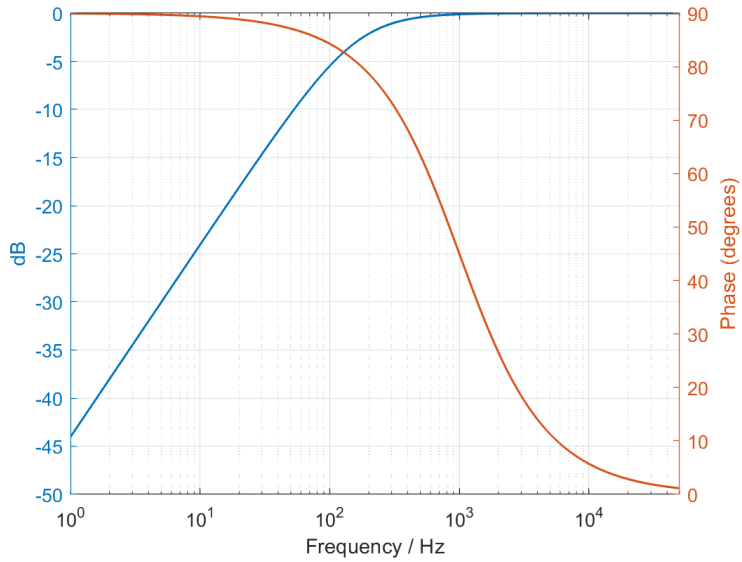

Figure 9.12: Bode plot of a first-order high-pass RC filter with $f_c = 159\,\text{Hz}$. The magnitude rises through $-3\,\text{dB}$ at f_c and approaches $0\,\text{dB}$ above the cutoff frequency.

9.6.5 RL Filters

Inductors can replace capacitors to build first-order filters. Because inductors are bulkier and more expensive than capacitors at audio frequencies, RC filters are more common in most applications. RL filters do appear in power electronics and radio-frequency circuits, where inductors are already present for other reasons.

Low-Pass RL Filter

Low-Pass RL Filter

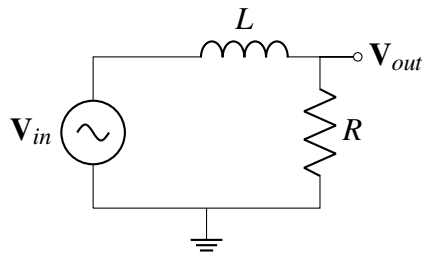

Figure 9.13: First-order low-pass RL filter. The output is taken across the resistor.

With $Z_1 = j\omega L$ and $Z_2 = R$:

$$V_{\text{out}} = V_{\text{in}} \times \frac{R}{R + j\omega L} = V_{\text{in}} \times \frac{1}{1 + j\omega L/R} \tag{9.40}$$

The time constant is $\tau = L/R$ and the cutoff frequency is:

$$f_c = \frac{R}{2\pi L} \tag{9.41}$$

High-Pass RL Filter

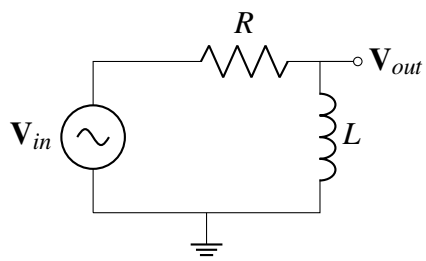

Figure 9.14: First-order high-pass RL filter. The output is taken across the inductor.

With $Z_1 = R$ and $Z_2 = j\omega L$:

$$V_{\text{out}} = V_{\text{in}} \times \frac{j\omega L}{R + j\omega L} = V_{\text{in}} \times \frac{j\omega L/R}{1 + j\omega L/R} \tag{9.42}$$

The cutoff frequency is again $f_c = R/(2\pi L)$, identical to the low-pass RL filter.

Note

The cutoff frequency formulas for all first-order filters share the same form when expressed in terms of the time constant: $f_c = 1/(2\pi\tau)$, where $\tau = RC$ for RC circuits and $\tau = L/R$ for RL circuits. The same time constant that governs the transient step response in Chapter 7 also determines the cutoff frequency in AC analysis.

9.7 RLC Circuits: Resonance

Podcast: RLC Circuits

When a resistor, inductor, and capacitor appear together in the same circuit, the opposing frequency behaviors of Z_L and Z_C interact to produce **resonance**: a frequency at which the inductive and capacitive reactances cancel exactly, leaving only resistance. This phenomenon underlies bandpass and band-stop filters, oscillators, and tuned amplifiers.

9.7.1 Series RLC Circuit

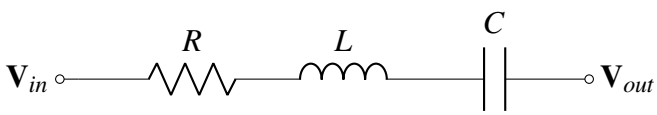

Figure 9.15: Series RLC circuit.

The total impedance is:

$$Z_{\text{RLC}} = R + j\omega L + \frac{1}{j\omega C} = R + j\left(\omega L - \frac{1}{\omega C}\right) \tag{9.43}$$

The imaginary part is the difference between inductive and capacitive reactance. At frequencies below resonance, $1/(\omega C)$ exceeds ωL and the circuit is net capacitive. At frequencies above resonance, ωL exceeds $1/(\omega C)$ and the circuit is net inductive. At resonance the two reactive terms cancel.

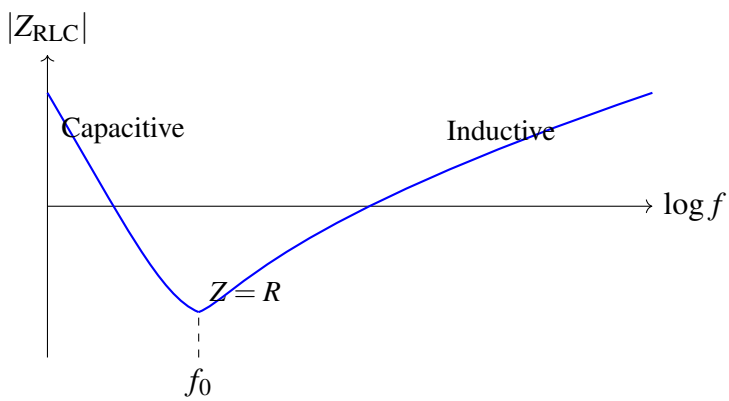

Figure 9.16: Impedance magnitude of a series RLC circuit versus frequency. The minimum occurs at the resonant frequency f_0, where the impedance equals R.

9.7.2 The Resonant Frequency

Resonance occurs when the imaginary part of Z_{RLC} equals zero:

$$\omega_0 L = \frac{1}{\omega_0 C} \tag{9.44}$$

Solving for ω_0 and converting to hertz:

$$f_0 = \frac{1}{2\pi\sqrt{LC}} \tag{9.45}$$

At resonance, impedance is minimum and purely resistive ($Z = R$), current is maximum, and voltage and current are in phase.

Example Calculating the Resonant Frequency

For $L = 10\,\text{mH}$ and $C = 100\,\text{nF}$:

$$f_0 = \frac{1}{2\pi\sqrt{LC}} = \frac{1}{2\pi\sqrt{10\times10^{-3}\times100\times10^{-9}}} = \frac{1}{2\pi\times31.6\times10^{-6}} \approx 5.03\,\text{kHz} \tag{9.46}$$

9.7.3 Parallel RLC Circuit

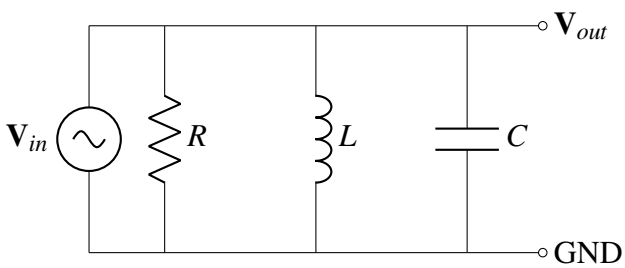

Figure 9.17: Parallel RLC circuit. The same phasor voltage appears across all three components.

Working with admittance is more convenient for the parallel case:

$$Y_{\text{RLC}} = \frac{1}{R} + \frac{1}{j\omega L} + j\omega C = \frac{1}{R} + j\left(\omega C - \frac{1}{\omega L}\right) \tag{9.47}$$

The behavior is the dual of the series circuit: at resonance ($\omega_0 = 1/\sqrt{LC}$) the admittances of the inductor and capacitor branches cancel, and the total admittance reduces to $1/R$, which corresponds to the *maximum* impedance. Away from resonance in either direction, the impedance falls.

9.7.4 Bandpass Filter

A parallel RLC combination used as the shunt element in a voltage divider produces bandpass behavior. Near resonance the shunt impedance is large, so most of the input voltage appears at the output. Well above or below resonance the shunt impedance is small, and the output is attenuated.

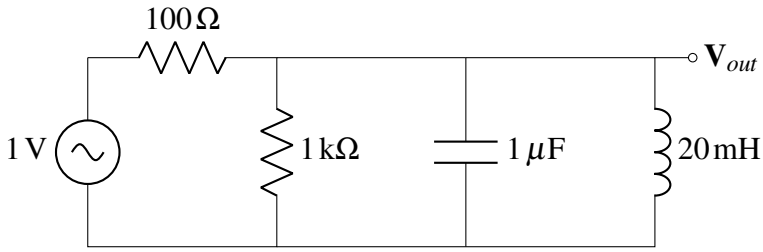

Figure 9.18: Bandpass filter using a parallel RLC network as the shunt element. The 100 Ω series resistor and the parallel RLC combination form a voltage divider whose shunt impedance peaks at the resonant frequency.

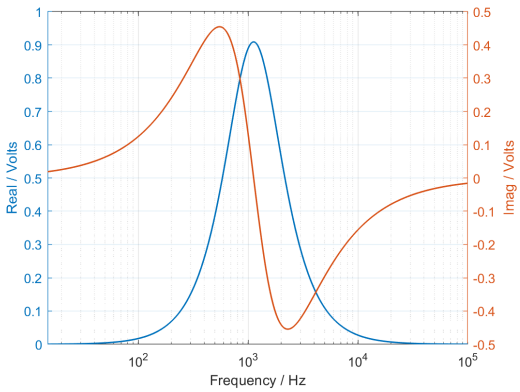

Figure 9.19: Voltage waveform of the parallel RLC circuit at resonance.

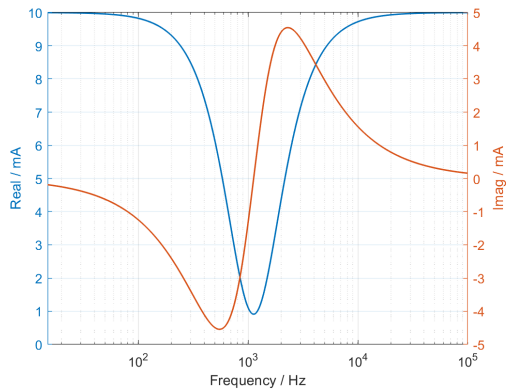

Figure 9.20: Current waveform of the parallel RLC circuit at resonance. At the resonant frequency the impedance is purely resistive, so voltage and current are in phase.

Example Radio Tuning with an RLC Circuit

Early radio receivers used a variable capacitor in parallel with a fixed inductor to select broadcast stations. Rotating the tuning knob changed the capacitance, shifting the resonant frequency to match the carrier frequency of the desired station while attenuating all others.

For FM radio (88–108 MHz) with $L = 1\,\mu\text{H}$, the required capacitance range is:

$$C_{\text{min}} = \frac{1}{(2\pi f_{\text{max}})^2 L} = \frac{1}{(2\pi \times 108 \times 10^6)^2 \times 10^{-6}} \approx 2.2\,\text{pF}, \tag{9.48}$$

$$C_{\text{max}} = \frac{1}{(2\pi f_{\text{min}})^2 L} = \frac{1}{(2\pi \times 88 \times 10^6)^2 \times 10^{-6}} \approx 3.3\,\text{pF}. \tag{9.49}$$

Note

In later courses you will encounter additional characterizations of RLC circuits: bandwidth, quality factor (Q), and the relationship between damping and the sharpness of the resonance peak. The resonant frequency (9.45) and the series/parallel impedance behaviors developed here provide the foundation for those topics.

Chapter Summary

This chapter developed impedance as the unifying tool for AC circuit analysis. Once every passive component is characterised by its impedance, all DC analysis techniques from Chapter 3 carry over directly: Kirchhoff's laws, series and parallel combinations, and the voltage divider all apply with complex arithmetic replacing real arithmetic.

The key physical insight is that reactive impedances depend on frequency. A capacitor's impedance falls as frequency rises; an inductor's rises. This complementary behavior is the basis for passive filters, which use a reactive component in an impedance voltage divider to produce a frequency-dependent output. First-order RC and RL filters roll off at $-20\,\text{dB}$ per decade beyond the cutoff frequency. When a capacitor and inductor are combined in an RLC circuit, their reactances cancel at the resonant frequency, producing the sharp frequency selectivity used in bandpass filters and tuned circuits.

Quantity	Expression
Impedance (general)	$Z = R + jX$
Resistor	$Z_R = R$
Capacitor	$Z_C = \dfrac{1}{j\omega C}$
Inductor	$Z_L = j\omega L$
Series combination	$Z_{\text{series}} = Z_1 + Z_2 + \cdots$
Parallel combination	$\dfrac{1}{Z_{\text{par}}} = \dfrac{1}{Z_1} + \dfrac{1}{Z_2} + \cdots$
Voltage divider	$\mathbf{V}_{out} = \mathbf{V}_{in}\dfrac{Z_2}{Z_1 + Z_2}$
Voltage gain (dB)	$G_{\text{dB}} = 20\log_{10}\left(\dfrac{\lvert V_{out}\rvert}{\lvert V_{in}\rvert}\right)$
RC filter cutoff	$f_c = \dfrac{1}{2\pi RC}$
RL filter cutoff	$f_c = \dfrac{R}{2\pi L}$
RLC resonant frequency	$f_0 = \dfrac{1}{2\pi\sqrt{LC}}$

Chapter 10

How Op-Amps Hide Complexity in Plain Sight

This chapter introduces the operational amplifier (op-amp), a versatile and powerful tool in electronics. The op-amp exemplifies the concept of abstraction in engineering, where complex systems are simplified into functional "black boxes" with well-defined inputs and outputs. Op-amps can perform various mathematical operations on electrical signals and are essential building blocks in numerous applications, from audio equipment to robotics. The chapter covers the basic op-amp, negative feedback, and essential circuit configurations. [1]

Learning Objectives:

- Understand the concept of abstraction in engineering and how it applies to operational amplifiers.
- Explain the basic operation and characteristics of an op-amp.
- Analyze and design basic op-amp circuits using negative feedback, including inverting amplifiers, non-inverting amplifiers, and voltage followers.

10.1 Basic Op-amp: The Power of Abstraction

Podcast: Op Amp Introduction

The preceding chapters have explored a wide range of electrical components and principles, progressively building a foundation for understanding how electronic circuits work. This final chapter introduces one of the most versatile and powerful tools in electronics: the operational amplifier, or op-amp for short. The op-amp clearly illustrates the concept of *abstraction* that this course has emphasized throughout.

Abstraction is a fundamental concept in engineering where complex systems are simplified into functional "black boxes" with well-defined inputs and outputs. Just as functions in

[1] This chapter draws upon concepts from *Electronic Circuits and Applications* by Senturia and Wedlock (Wiley, 1975), Analog Devices Electronics I and II: Operational Amplifier Basics by Doug Mercer, and insights from Mark Thoren's video A Bit of Op-Amp History and Applications.

programming can be used without examining their internal implementation, the op-amp allows engineers to create sophisticated circuits without needing to understand the complex internal components.

Note

The operational amplifier is a compelling example of abstraction in electrical engineering. Although an op-amp contains 20–30 transistors internally, it can be used effectively without understanding these internal components. Only the behavior at its terminals matters for circuit analysis.

Operational amplifiers earned their name from their original purpose: performing mathematical operations in analog computers. These versatile devices can add, subtract, integrate, and differentiate electrical signals. Today, op-amps are essential building blocks in countless applications, from audio equipment and medical devices to industrial sensors and communication systems.

Three capabilities make op-amps particularly useful in practice: they can amplify extremely weak electrical signals from sensors, compare voltages with high precision, and buffer signals to prevent loading effects between circuit stages. These tasks are accomplished using a concept encountered in earlier chapters: feedback.

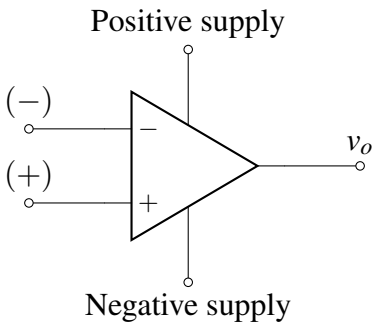

Figure 10.1: Standard op-amp symbol with its five essential terminals: two inputs (+ and −), one output, and two power supply connections.

Figure 10.1 shows the standard symbol for an op-amp with its five terminals. Each terminal is described as follows:

- The non-inverting input (marked with +): A signal applied to this input produces an output that is in phase with it (not inverted).
- The inverting input (marked with −): A signal applied to this input produces an output that is 180° out of phase (inverted).
- The output terminal: The amplified signal appears here.
- Two power supply terminals: These provide the energy required for the op-amp to function. This chapter assumes a split (dual) power supply with equal positive and negative voltages.

Unlike the passive components studied in earlier chapters (resistors, capacitors, and inductors), the op-amp requires an external power supply to operate. This is what defines it as an

active component: the power supply is the source of energy that enables output signals with gains greater than unity. The supply current relationship is examined more closely below.

It is important to understand that the $(+)$ and $(-)$ labels do not restrict the polarity of signals applied to these inputs; they indicate how the op-amp responds to those signals.

Simplified op-amp symbols that omit the power supply connections are often used in circuit diagrams, as shown in Figure 10.2(c). This is another application of abstraction: the analysis focuses only on the signal-processing terminals while assuming the power connections are properly made.

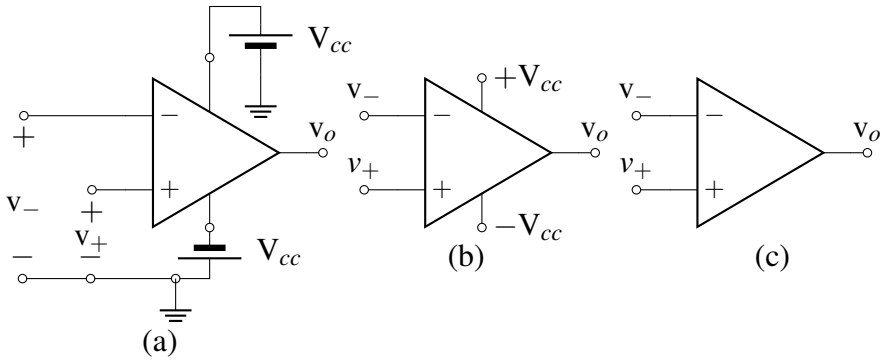

Figure 10.2: Op-amp circuit representations: (a) complete circuit with power supplies, (b) simplified representation showing power terminals, and (c) most common representation used in circuit diagrams where power connections are assumed to be present but not shown.

Before examining how op-amps function in practical circuits, it is useful to consider the currents flowing through each terminal. Figure 10.3 shows these currents. By Kirchhoff's Current Law (KCL), introduced in Chapter **??**, the sum of all currents entering a node must equal zero:

$$i_- + i_+ + i_{C+} + i_{C-} + i_o = 0$$

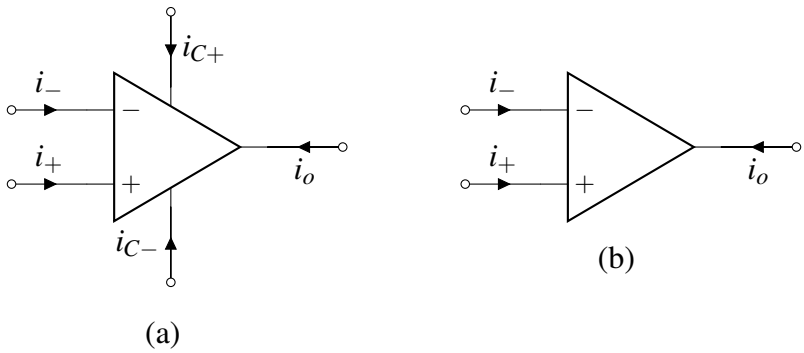

Figure 10.3: Op-amp terminal currents: (a) all currents shown, including power supply currents; (b) simplified representation that omits power supply connections. Diagram (a) must be used when applying KCL because it includes the power supply currents.

One of the important characteristics of op-amps is that the input currents (i_- and i_+) are extremely small, practically zero for most applications. This means:

$$(i_- + i_+) \ll (i_{C+} + i_{C-} + i_o)$$

The equation therefore simplifies to:

$$i_{C+} + i_{C-} = -i_o$$

This result carries an important implication: the output current (i_o) must flow through the power supply terminals. The op-amp draws power from the supply to deliver current to the load connected at its output. With this understanding of the op-amp's basic structure and current flow, the ideal op-amp model can now be introduced.

10.2 Ideal Operational Amplifier: A Perfect Abstract Model

In earlier chapters, ideal components such as perfect voltage sources and ideal wires were used to make fundamental circuit concepts more accessible. The *ideal op-amp model* applies the same approach: it provides a simplified description of op-amp behavior without reference to the complex internal circuitry.

This ideal model is a mathematical abstraction, a set of rules that describe how the op-amp behaves at its terminals. No real op-amp perfectly matches these ideal characteristics, but modern op-amps come very close for most practical applications. The abstraction allows circuits to be designed with confidence that they will behave as expected.

Note

Just as a calculator can be used effectively without understanding its electronic internals, an op-amp can be used without knowing about the transistors and other components inside it. Abstraction allows the focus to remain on what a component does rather than how it does it.

The most fundamental characteristic of an op-amp is that it amplifies the *difference* between its two input voltages. The output voltage (v_{out}) is determined by:

$$v_{out} = A(v_+ - v_-)$$

where:

- v_+ is the voltage at the non-inverting input
- v_- is the voltage at the inverting input
- A is the open-loop gain (the amplification factor)

In the ideal op-amp model, this gain (A) is assumed to be infinite. In real op-amps, it is very large, typically around 100,000 to 1,000,000 (10^5 to 10^6). Even a tiny voltage difference between the inputs (measured in microvolts) can drive the output to its maximum level.

Figure 10.4 shows a block diagram of the op-amp's function and its transfer characteristic, which describes how the output responds to the input difference.

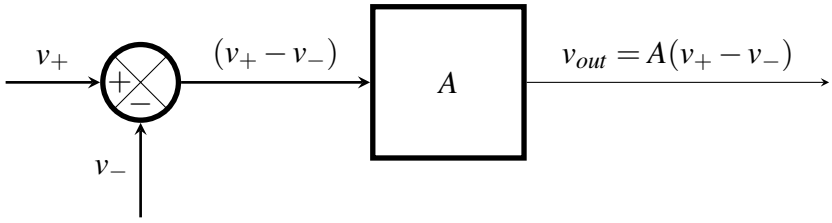

Figure 10.4: Op-amp functional block diagram. The output is the difference of the two inputs multiplied by the open-loop gain A.

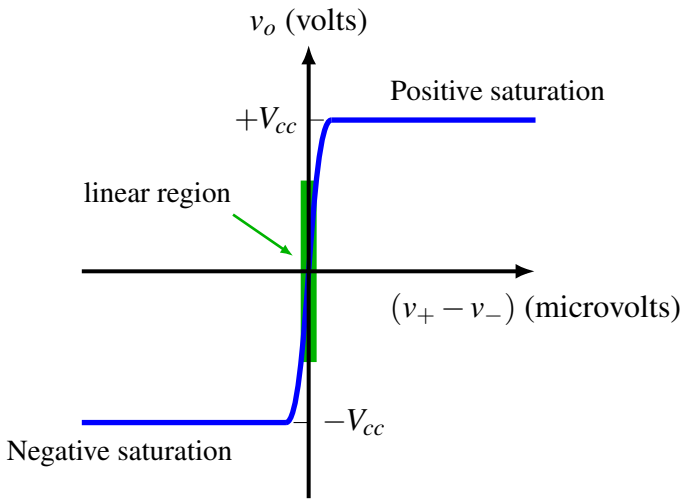

Figure 10.5: Op-amp transfer characteristic curve. The green vertical line represents the linear region where the input difference is extremely small (measured in microvolts). Outside this region, the output saturates at either $+V_{cc}$ or $-V_{cc}$.

The transfer characteristic (bottom graph in Figure 10.4) reveals an important constraint: the output voltage can never exceed the power supply voltages. The maximum output is $+V_{cc}$ and the minimum is $-V_{cc}$. When the output reaches these limits, the op-amp is said to be "saturated."

Because the gain is extremely high (around 10^6), the linear operating region is extremely narrow. For example, with $V_{cc} = 15\,\text{V}$ and a gain of 10^6, the input difference $(v_+ - v_-)$ can only vary between $-15\,\mu\text{V}$ and $+15\,\mu\text{V}$ for linear operation. Without additional components, an op-amp can therefore only amplify extremely small voltage differences before saturating.

Example Working with the Op-Amp Equation

Consider an op-amp without any additional component. The op-amp has a gain $A = 100{,}000$ and is powered by $V_{cc} = \pm 12\,\mathrm{V}$. If the non-inverting input is at $v_+ = 5.00005\,\mathrm{V}$ and the inverting input is at $v_- = 5.00000\,\mathrm{V}$, what is the output voltage?
Using $v_{out} = A(v_+ - v_-)$:

$$v_{out} = 100{,}000 \times (5.00005\,\mathrm{V} - 5.00000\,\mathrm{V}) \tag{10.1}$$
$$= 100{,}000 \times 0.00005\,\mathrm{V} \tag{10.2}$$
$$= 5\,\mathrm{V} \tag{10.3}$$

The output is $+5\,\mathrm{V}$, which is within the supply range of $\pm 12\,\mathrm{V}$.
What if $v_+ = 5.0002\,\mathrm{V}$ and $v_- = 5.0000\,\mathrm{V}$?

$$v_{out} = 100{,}000 \times (5.0002\,\mathrm{V} - 5.0000\,\mathrm{V}) \tag{10.4}$$
$$= 100{,}000 \times 0.0002\,\mathrm{V} \tag{10.5}$$
$$= 20\,\mathrm{V} \tag{10.6}$$

Since $20\,\mathrm{V}$ exceeds the positive supply of $+12\,\mathrm{V}$, the output saturates at $+12\,\mathrm{V}$.

10.2.1 Characteristics of the Ideal Op-Amp

The ideal op-amp model assumes several perfect characteristics that simplify analysis:

1. **Infinite voltage gain**: The ideal op-amp amplifies the voltage difference between inputs infinitely. In practice, real op-amps have very high gains (10^5 to 10^6).

2. **Infinite input impedance**: No current flows into either input terminal. The op-amp does not load the circuits connected to its inputs. Real op-amps have very high input impedances ($10^{12}\,\Omega$ or more).

3. **Zero output impedance**: The op-amp can deliver any amount of current to a load without its output voltage dropping. Real op-amps have very low output impedances (less than $100\,\Omega$).

4. **Infinite bandwidth**: The op-amp responds instantly to input changes, regardless of frequency. Real op-amps have limitations at high frequencies.

5. **Zero offset voltage**: With identical voltages at both inputs, the output is exactly zero. Real op-amps exhibit small differences between inputs.

These ideal characteristics are another application of abstraction: they simplify analysis while remaining close enough to reality for most practical work. Modern op-amps approach these ideal behaviors across most application conditions.

Caution

While the ideal op-amp model is extremely useful for understanding circuits, real op-amps have limitations. When designing critical circuits, it is necessary to consult datasheets to understand the specific characteristics of the device in use.

Operating an op-amp in its linear region without external components is severely limited by the narrow input voltage range. By adding external components and applying feedback, it becomes possible to create practical, stable circuits with predictable behavior. The following sections explore how this is accomplished.

10.3 Feedback: The Key to Control

Podcast: Feedback in Op Amps

Feedback is a powerful principle in which a system's output influences its input, creating a closed loop. This principle governs how the body maintains temperature, how a thermostat controls heating, and how many natural and engineered systems achieve stability and control.

10.3.1 Understanding Feedback Systems

Feedback takes two primary forms:

- **Negative feedback**: The output is fed back to oppose or reduce changes in the system. It promotes stability and makes systems resistant to disturbances.

- **Positive feedback**: The output is fed back to reinforce or amplify changes in the system. It can lead to instability but is useful in certain specialized applications.

Example Everyday Feedback Systems

Negative feedback examples:

- A thermostat that turns off heating when the temperature rises above a setpoint
- The body sweating to cool down when overheated
- A cruise control system that maintains a constant speed

Positive feedback examples:

- The feedback squeal produced when a microphone is placed too close to a speaker
- An avalanche, where the movement of snow triggers the movement of more snow
- The contractions during childbirth, which release hormones that trigger stronger contractions

A useful way to visualize negative and positive feedback is through a mechanical analogy, as shown in Figure 10.6.

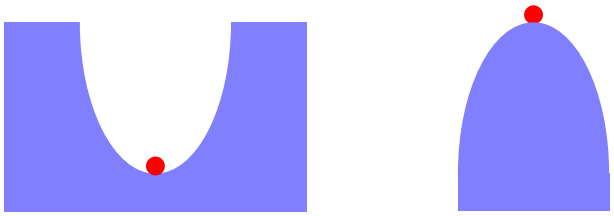

(a) Negative Feedback (b) Positive Feedback

Figure 10.6: Feedback analogy: (a) a ball in a valley represents negative feedback, where any displacement generates a restoring force; (b) a ball on a hilltop represents positive feedback, where any small displacement causes it to move further from the initial position.

10.3.2 Negative Feedback in Op-Amp Circuits

In op-amp circuits, feedback plays a decisive role. As established in Section **??**, the open-loop gain of an op-amp is extremely large, making the linear operating region impossibly narrow for most practical input signals. Negative feedback resolves this limitation.

When negative feedback is applied, a portion of the output signal is returned to the inverting input ($-$), creating a self-correcting loop. The mechanism operates as follows:

1. The op-amp amplifies the difference between its inputs ($v_+ - v_-$).
2. Part of the output is fed back to the inverting input through a feedback network (typically resistors).
3. This feedback acts to reduce the voltage difference between the inputs.
4. The circuit reaches equilibrium when the input difference is virtually zero.

The result is a self-regulating system. If the output rises too high, the feedback increases the voltage at the inverting input, which in turn reduces the output. If the output falls too low, the feedback decreases the inverting input voltage, causing the output to rise. The circuit behavior becomes stable and predictable, the operating range expands from microvolts to the full supply range, and the gain is set by the external feedback network rather than by the op-amp's internal gain.

In contrast, positive feedback returns the output to the non-inverting input ($+$), which can lead to oscillation or rapid switching between states. This behavior is useful in specialized circuits such as oscillators, comparators, and Schmitt triggers, but is not addressed further in this chapter.

Caution

An op-amp without any feedback (called open-loop operation) is rarely useful for linear amplification because of its extremely high gain. Even tiny input differences will drive the output to saturation. Negative feedback is what makes op-amps practical and versatile.

10.3.3 Golden Rules for Op-Amps with Negative Feedback

The effect of negative feedback on an ideal op-amp leads directly to two analytical rules that make circuit analysis straightforward. Because the op-amp drives its output to reduce the input difference to zero, and because the ideal input impedance is infinite, the following conditions hold whenever an op-amp operates in its linear region with negative feedback:

Golden Rules of Negative Feedback Op-amps

1. **Virtual Short Rule**: The op-amp adjusts its output to make the voltage difference between its inputs virtually zero:

$$v_+ - v_- \approx 0$$

2. **Virtual Open Rule**: No current flows into either input terminal of the op-amp:

$$i_+ = i_- = 0$$

These two rules are a direct consequence of the ideal model and of negative feedback. They eliminate the need to work with the op-amp's enormous open-loop gain and allow circuits to be analyzed using only the basic circuit laws developed in earlier chapters.

These rules apply **only** when:

- The op-amp has negative feedback
- The op-amp is operating in its linear region (not saturated)
- The ideal op-amp model is in use (or a real op-amp operating below its frequency limitations)

Example The Power of the Golden Rules

Consider analyzing a circuit containing an op-amp along with many other components. Without the golden rules, it would be necessary to account for the op-amp's open-loop gain (typically 10^5 or more), calculate input differences in the microvolt range, and solve equations involving extremely large numbers.
With the golden rules, the analysis simplifies to: set $v_+ = v_-$, set $i_+ = i_- = 0$, and apply Kirchhoff's laws and Ohm's law as in any other circuit. The examples in the following sections demonstrate how consistently this approach works.

10.4 Negative Feedback Op-Amp Circuits

The preceding section established the golden rules for analyzing op-amp circuits with negative feedback. The following subsections apply those rules to the three fundamental op-amp

configurations: the inverting amplifier, the non-inverting amplifier, and the voltage follower.

Both amplifier configurations use resistors to form the feedback network. The ratio of these resistors determines the circuit gain, not the op-amp's internal gain. This gives engineers considerable flexibility, as precise gains can be set using standard resistor values.

For most practical applications, resistors in the range of 1 kΩ to 100 kΩ work well. Values below 1 kΩ may draw excessive current, while values above 100 kΩ can be more susceptible to noise and interference.

10.4.1 Inverting Amplifier

Podcast: Inverting and Non Inverting Op Amps

The inverting amplifier is one of the most widely used op-amp circuits. It produces an inverted output signal (opposite in polarity) relative to the input signal. Figure 10.7 shows the basic configuration.

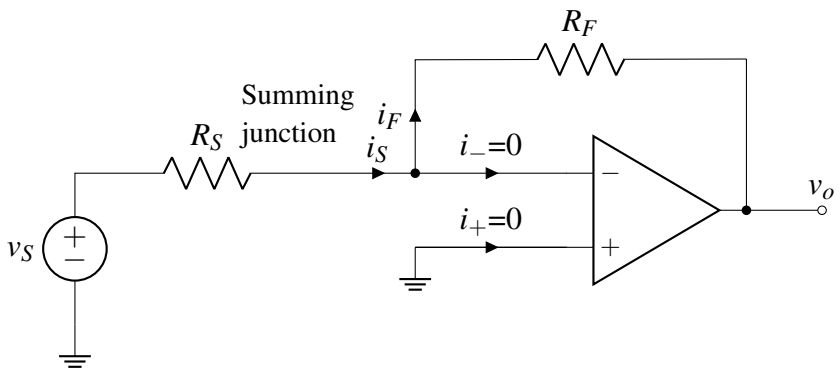

Figure 10.7: Inverting amplifier circuit. The input signal arrives through R_S, and feedback is provided through R_F. The non-inverting input (+) is connected to ground.

Analyzing the Inverting Amplifier

Applying the golden rules to this circuit:

1. **Golden Rule 1** (Virtual Short): The op-amp adjusts its output so that $v_+ = v_-$.

   Since the non-inverting input (v_+) is connected to ground, $v_+ = 0\,\text{V}$.

   Therefore, the inverting input must also be at $v_- = 0\,\text{V}$.

   This node is called a "virtual ground": it sits at ground potential even though it is not directly connected to ground.

2. **Golden Rule 2** (Virtual Open): No current flows into the op-amp inputs.

   All current flowing through R_S must therefore flow through R_F:

$$i_S = i_F$$

Applying Ohm's law to each resistor:

$$i_S = \frac{v_S - v_-}{R_S} = \frac{v_S - 0}{R_S} = \frac{v_S}{R_S}$$

$$i_F = \frac{v_- - v_o}{R_F} = \frac{0 - v_o}{R_F} = \frac{-v_o}{R_F}$$

Setting $i_S = i_F$:

$$\frac{v_S}{R_S} = \frac{-v_o}{R_F}$$

Solving for v_o:

$$v_o = -\frac{R_F}{R_S} v_S \tag{10.7}$$

The negative sign confirms that the output is inverted relative to the input. The circuit gain is:

$$\text{Gain} = -\frac{R_F}{R_S} \tag{10.8}$$

Example Inverting Amplifier Design

Consider designing an inverting amplifier with a gain of -5.
Using the gain formula: Gain $= -\frac{R_F}{R_S}$
The requirement $-5 = -\frac{R_F}{R_S}$ gives $\frac{R_F}{R_S} = 5$.
Suitable resistor combinations include:

- $R_S = 10\,\text{k}\Omega$ and $R_F = 50\,\text{k}\Omega$
- $R_S = 2\,\text{k}\Omega$ and $R_F = 10\,\text{k}\Omega$
- $R_S = 1\,\text{k}\Omega$ and $R_F = 5\,\text{k}\Omega$

Any of these combinations produces the desired gain of -5.
For an input $v_S = 0.5\,\text{V}$, the output is:

$$v_o = -5 \times 0.5\,\text{V} = -2.5\,\text{V}$$

Key Features of the Inverting Amplifier

- **Phase Inversion**: The output is 180° out of phase with the input.
- **Input Impedance**: The input impedance equals R_S, which is relatively low compared to the non-inverting configuration.
- **Summing Capability**: Multiple inputs can be combined by connecting additional resistors to the inverting input.
- **Virtual Ground**: The inverting input acts as a virtual ground, which is useful in summing and mixing applications.

Mechanical Analogy: The Seesaw

A useful way to visualize the inverting amplifier is the seesaw (first-class lever), shown in Figure 10.8. The fulcrum represents the virtual ground at the inverting input. The left arm represents R_S and the right arm represents R_F. When the input side moves down, the output side moves up, illustrating the inversion. The ratio of the arm lengths corresponds to the ratio of resistors, just as mechanical advantage relates to lever geometry.

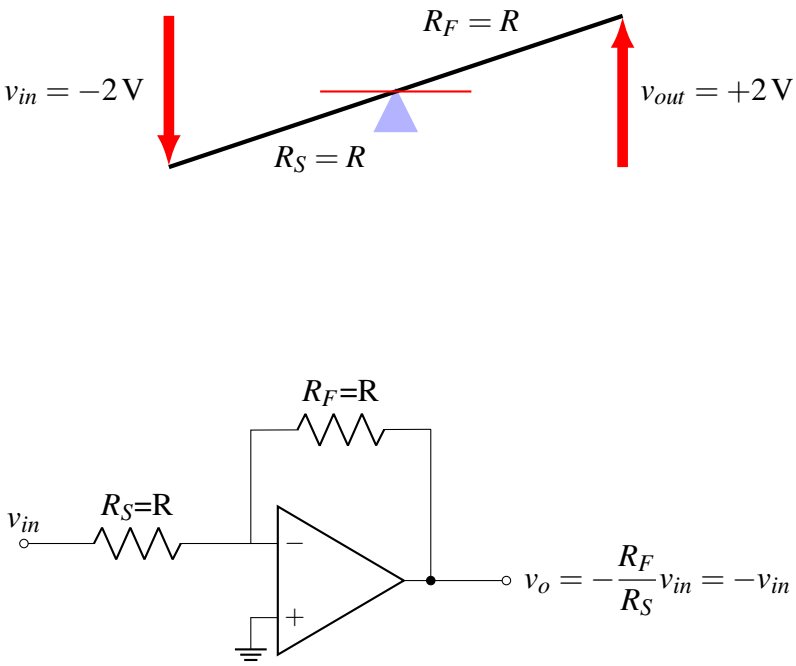

Figure 10.8: Seesaw analogy for an inverting amplifier with gain $= -1$. The fulcrum represents the virtual ground at the inverting input; the lever arms represent the resistors.

When the resistors are equal ($R_F = R_S$), the gain is -1: the output magnitude equals the input magnitude with opposite polarity. Figure **??** shows the case $R_F = 2R_S$, giving a gain of -2.

The inverting amplifier is just one of several useful op-amp configurations. The next subsection introduces the non-inverting amplifier, which provides gain without phase inversion.

10.4.2 The Summing Amplifier

The inverting amplifier processes a single input voltage and produces a scaled, inverted output. Many practical applications require combining two or more signals into a single output: mixing audio channels, adding a fixed DC reference to an AC signal, or computing a weighted average of several sensor readings. The summing amplifier extends the inverting configuration to multiple inputs by exploiting the virtual-ground property of the inverting input.

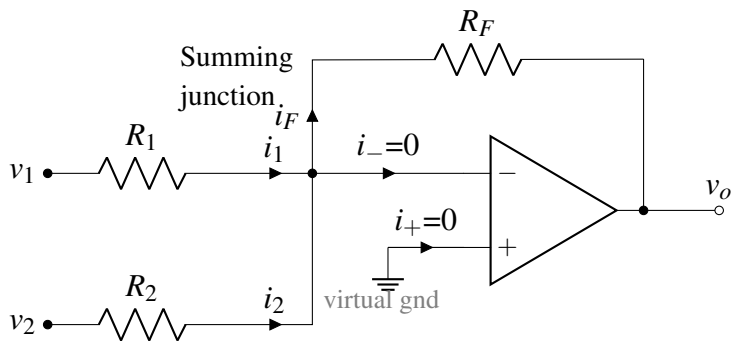

Figure 10.9: Two-input summing amplifier. Both input resistors R_1 and R_2 meet at the inverting input, which is held at virtual ground by negative feedback. The feedback resistor R_f sets the output as a scaled, inverted sum of the two inputs.

Analysis

Applying the Golden Rules to the circuit in Figure 10.9:

- **Virtual short:** the inverting input is at 0 V (virtual ground), even though it is not physically connected to ground.
- **Virtual open:** no current flows into or out of the inverting input terminal.

With the inverting input at 0 V, the currents through R_1 and R_2 are determined entirely by their respective input voltages:

$$i_1 = \frac{v_1}{R_1}, \qquad i_2 = \frac{v_2}{R_2}.$$

By KCL at the inverting input, and using the virtual open (no current enters the op-amp), both currents must flow through the feedback resistor:

$$i_1 + i_2 = i_f.$$

The voltage across R_f sets the output. Since the inverting input is at 0 V and i_f flows from the virtual-ground node toward the output:

$$v_{\text{out}} = 0 - i_f R_f = -(i_1 + i_2) R_f.$$

Substituting:

$$v_{\text{out}} = -R_f \left(\frac{v_1}{R_1} + \frac{v_2}{R_2} \right). \tag{10.9}$$

Each input contributes to the output with an independent gain of $-R_f/R_k$ for input k. The output is the inverted, weighted sum of all inputs.

Special Cases

When both input resistors are equal ($R_1 = R_2 = R$), the output simplifies to:

$$v_{\text{out}} = -\frac{R_f}{R}(v_1 + v_2).$$

Setting $R_f = R$ gives a unity-gain inverting summer: $v_{\text{out}} = -(v_1 + v_2)$.

The analysis extends directly to N inputs. With inputs $v_1, v_2, \ldots, v_N$ through resistors $R_1, R_2, \ldots, R_N$, the output is:

$$v_{\text{out}} = -R_f \sum_{k=1}^{N} \frac{v_k}{R_k}.$$

Design Example

Problem: Design a two-input summing amplifier in which v_1 is amplified by a factor of 3 and v_2 is amplified by a factor of 1, with both contributions inverted at the output. Use a feedback resistor of $R_f = 30\,\text{k}\Omega$.

Solution: From Equation 10.9, the gain for each input is $-R_f/R_k$. Setting the gain magnitudes:

$$\frac{R_f}{R_1} = 3 \implies R_1 = \frac{30}{3} = 10\,\text{k}\Omega,$$
$$\frac{R_f}{R_2} = 1 \implies R_2 = \frac{30}{1} = 30\,\text{k}\Omega.$$

The output is $v_{\text{out}} = -(3v_1 + v_2)$.

A Practical Note on DC Offsets

A particularly useful application of the summing amplifier is DC offset removal. If v_1 carries a time-varying signal riding on an unwanted DC component, a second input v_2 can be connected to a fixed DC reference voltage of appropriate sign and magnitude to cancel the offset at the output. After cancellation, a subsequent gain stage can scale the signal to match the input range of a measurement system. This application is developed in Chapter 11, where the summing amplifier is used as part of a sensor signal chain.

10.4.3 Noninverting Amplifier

Some applications require amplification without phase inversion. The non-inverting amplifier provides this capability. Figure 10.10 shows the circuit configuration.

Analyzing the Non-inverting Amplifier

Applying the golden rules:

1. **Golden Rule 1** (Virtual Short): The op-amp adjusts its output so that $v_+ = v_-$.

   Since the non-inverting input receives the input signal, $v_+ = v_S$.

   Therefore, the inverting input must also be at $v_- = v_S$.

2. **Golden Rule 2** (Virtual Open): No current flows into the op-amp inputs.

   All current flowing through R_F must also flow through R_1.

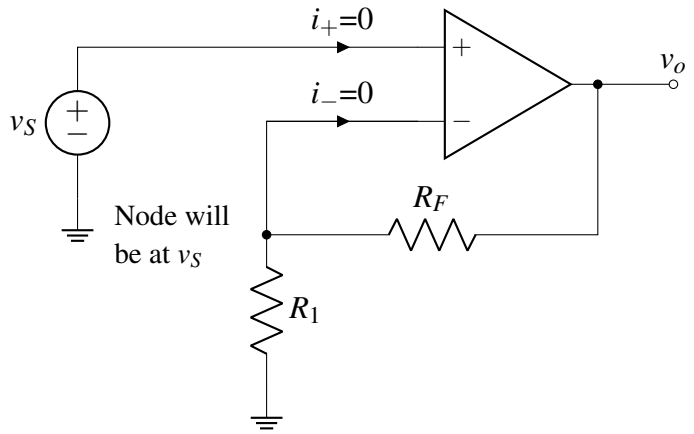

Figure 10.10: Non-inverting amplifier circuit. The input signal is applied directly to the non-inverting input (+), while feedback is provided through the voltage divider formed by R_F and R_1.

The feedback network formed by R_F and R_1 is a voltage divider of exactly the type analyzed in Section **??**. It determines what fraction of the output voltage appears at the inverting input:

$$v_- = v_o \cdot \frac{R_1}{R_1 + R_F}$$

Since $v_- = v_S$ from Golden Rule 1:

$$v_S = v_o \cdot \frac{R_1}{R_1 + R_F}$$

Solving for v_o:

$$v_o = \left(1 + \frac{R_F}{R_1}\right) v_S \tag{10.10}$$

The circuit gain is:

$$\text{Gain} = 1 + \frac{R_F}{R_1} \tag{10.11}$$

Note that the gain formula $1 + R_F/R_1$ is always at least 1. This is a direct consequence of the voltage divider in the feedback path: a voltage divider can only attenuate a signal, never amplify it. To satisfy the virtual short condition ($v_- = v_S$), the op-amp must therefore always produce an output that is at least as large as the input.

Example Non-inverting Amplifier Design

Consider designing a non-inverting amplifier with a gain of 5.
Using the gain formula: Gain $= 1 + \frac{R_F}{R_1}$
The requirement $5 = 1 + \frac{R_F}{R_1}$ gives $\frac{R_F}{R_1} = 4$.
Suitable resistor combinations include:

- $R_1 = 10\,\text{k}\Omega$ and $R_F = 40\,\text{k}\Omega$
- $R_1 = 5\,\text{k}\Omega$ and $R_F = 20\,\text{k}\Omega$
- $R_1 = 2.5\,\text{k}\Omega$ and $R_F = 10\,\text{k}\Omega$

For an input $v_S = 0.5\,\text{V}$, the output is:

$$v_o = 5 \times 0.5\,\text{V} = 2.5\,\text{V}$$

Key Features of the Non-inverting Amplifier

- **No Phase Inversion**: The output is in phase with the input.
- **High Input Impedance**: The input impedance is extremely high (ideally infinite), which prevents loading the signal source.
- **Gain Always** ≥ 1: The gain cannot be less than unity.
- **Buffer Capability**: With appropriate resistor values, it can serve as a buffer to isolate circuit stages.

Visualizing the Non-inverting Amplifier

Figures 10.11 and 10.12 show the non-inverting amplifier alongside a lever analogy in which both the input and output displacements occur on the same side of the fulcrum. This corresponds to the in-phase relationship between input and output. The figures show gain values of 2 and 3 respectively, obtained with $R_F = R_1$ and $R_F = 2R_1$.

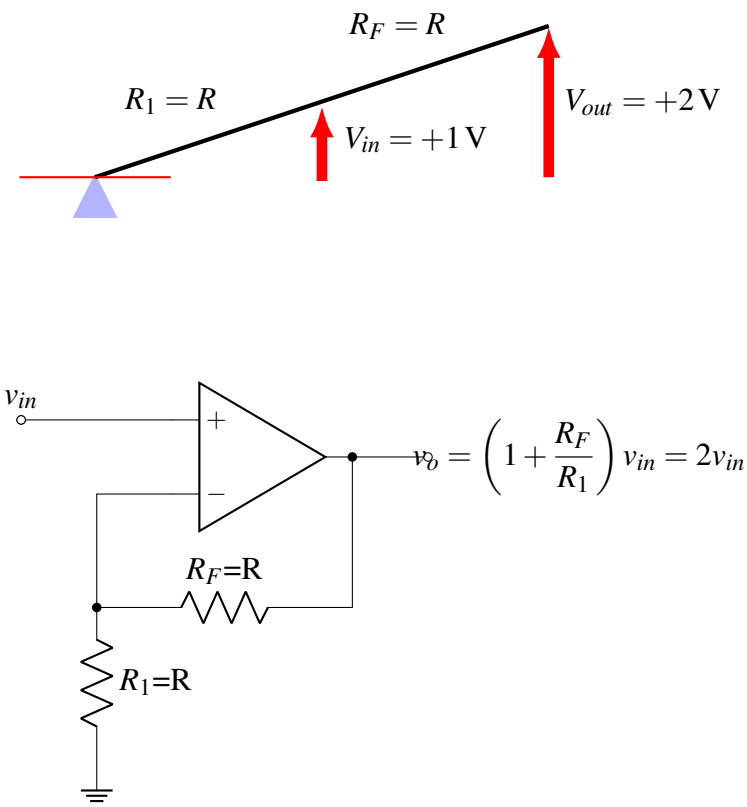

Figure 10.11: Lever analogy for a non-inverting amplifier with gain = 2. Input and output displacements are on the same side of the fulcrum, corresponding to the in-phase relationship between input and output.

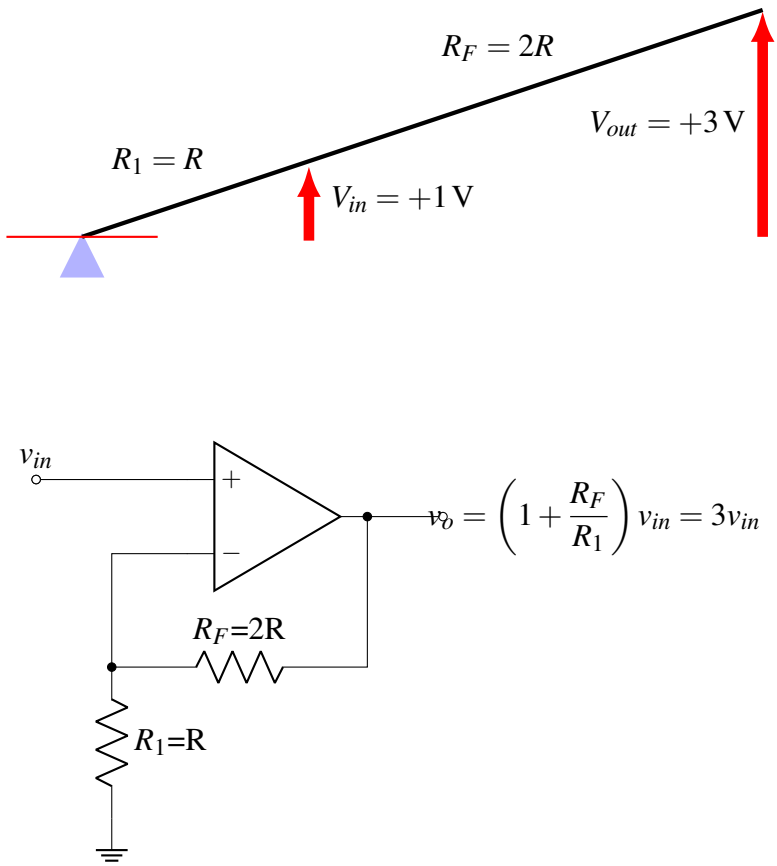

Figure 10.12: Lever analogy for a non-inverting amplifier with gain = 3.

Note

The choice between inverting and non-inverting configurations depends on the circuit requirements. Use an inverting amplifier when signal inversion or summing capability is needed. Use a non-inverting amplifier when high input impedance or in-phase gain is required.

10.4.4 Voltage Follower: The Perfect Buffer

Podcast: Op Amps Follower

The voltage follower (also called a unity-gain buffer) is a particularly useful op-amp circuit. It is a special case of the non-inverting amplifier where the gain is exactly 1.

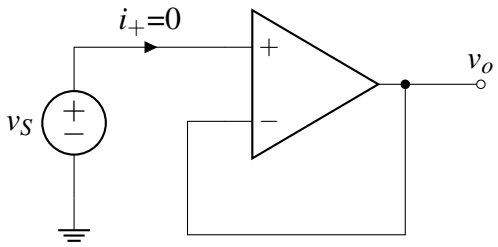

Figure 10.13: Voltage follower circuit. The output is connected directly to the inverting input, creating 100% feedback with a gain of exactly 1.

As shown in Figure 10.13, the voltage follower has direct feedback from the output to the inverting input with no resistors in the feedback path. The input signal is applied to the non-inverting input.

Analyzing the Voltage Follower

Applying the golden rules:

1. **Golden Rule 1** (Virtual Short): The op-amp adjusts its output so that $v_+ = v_-$.

   Since the non-inverting input receives the input signal, $v_+ = v_S$.

   The inverting input is connected directly to the output, so $v_- = v_o$.

   Therefore: $v_S = v_o$.

2. **Golden Rule 2** (Virtual Open): No current flows into the op-amp inputs.

The transfer function is:

$$v_o = v_S \tag{10.12}$$

The output voltage follows the input voltage exactly, hence the name "voltage follower."

Key Features of the Voltage Follower

This circuit may appear trivial: an op-amp is used to reproduce the input voltage unchanged. The value lies in its impedance properties, not its voltage gain:

- **Impedance transformation**: The circuit presents an extremely high input impedance (ideally infinite) and a very low output impedance (ideally zero). This prevents loading effects when connecting stages with different impedance characteristics.

- **Isolation**: The circuit isolates stages, preventing one stage from affecting another through loading.

- **Current amplification**: Although voltage gain is unity, the circuit can supply considerably more current to a load than the original signal source could.

- **Signal conditioning**: The circuit rejects common-mode noise, which can improve signal quality in noisy environments.

Example Voltage Follower Application

Consider a sensor with an output impedance of 10 MΩ connected directly to a circuit with an input impedance of 10 kΩ. The loading effect produces a voltage divider:

$$v_{circuit} = v_{sensor} \cdot \frac{10\,\text{k}\Omega}{10\,\text{M}\Omega + 10\,\text{k}\Omega} \approx v_{sensor} \cdot \frac{10\,\text{k}\Omega}{10\,\text{M}\Omega} = v_{sensor} \cdot 0.001$$

Only 0.1% of the sensor signal reaches the circuit.
This is the same loading problem encountered with voltmeters in Section **??**. Inserting a voltage follower between the sensor and the circuit resolves the issue: the sensor sees the op-amp's high input impedance (effectively infinite), and the circuit receives the full signal from the op-amp's low output impedance. Nearly 100% of the signal is preserved.

Practical Applications

Voltage followers appear in numerous practical contexts:

- **Sensor interfaces**: Buffering weak signals from high-impedance sensors
- **Audio equipment**: Isolating stages in audio signal chains
- **Voltage references**: Providing a stable reference that can drive a load without voltage droop
- **Signal distribution**: Driving multiple destinations from a single source without loading effects

Figure 10.14 shows a voltage reference circuit using a voltage follower. The resistor divider establishes a reference of $V_{cc}/2$, and the voltage follower buffers this reference so that the output voltage remains at $V_{cc}/2$ regardless of the load.

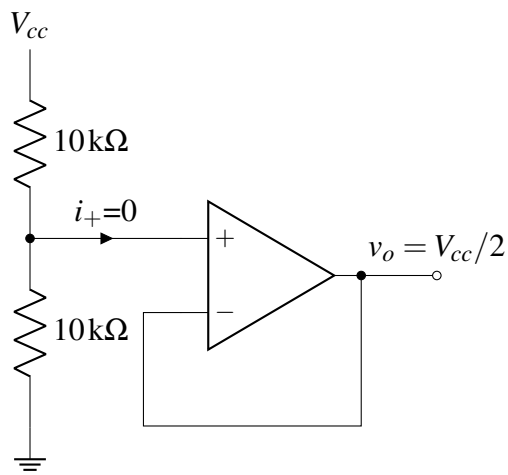

Figure 10.14: Voltage reference circuit using a voltage follower. The resistor divider establishes $V_{cc}/2$, and the voltage follower buffers this reference so that the output remains stable under load.

Note

The voltage follower is often the first op-amp circuit students build, because of its simplicity. Do not underestimate its importance: many professional circuit designs rely on voltage followers as essential components.

Chapter Summary

This chapter introduced the operational amplifier as a compelling illustration of abstraction in electrical engineering. Despite containing dozens of transistors internally, the op-amp can be analyzed and applied using just two rules and a small number of circuit configurations. This is the practical power of abstraction: complex systems become accessible by focusing on terminal behavior rather than internal implementation.

The ideal op-amp model defines an amplifier with infinite open-loop gain, infinite input impedance, and zero output impedance. While no physical device achieves these ideals, modern op-amps come close enough that the ideal model gives accurate results across most application conditions. The transfer characteristic shows that without feedback the linear operating range is limited to microvolts, making open-loop operation impractical for amplification.

Negative feedback resolves this limitation. When a portion of the output is returned to the inverting input, the circuit reaches equilibrium with the input difference driven to virtually zero. This yields the two golden rules: $v_+ \approx v_-$ (virtual short) and $i_+ = i_- = 0$ (virtual open). Applied together, these rules reduce any negative-feedback op-amp circuit to a straightforward problem in Ohm's law and Kirchhoff's laws.

Three fundamental configurations were analyzed. The inverting amplifier inverts the signal and sets gain by the resistor ratio R_F/R_S. The non-inverting amplifier preserves phase and provides a gain always greater than or equal to unity, set by $1 + R_F/R_1$. The voltage follower, a limiting case of the non-inverting amplifier, provides unity gain with extremely high input impedance and extremely low output impedance, solving the impedance-mismatch and loading problems encountered in earlier chapters.

Key Formulas

Configuration	**Transfer Function**	**Gain**
Inverting amplifier	$v_o = -\dfrac{R_F}{R_S} v_S$	$-\dfrac{R_F}{R_S}$
Non-inverting amplifier	$v_o = \left(1 + \dfrac{R_F}{R_1}\right) v_S$	$1 + \dfrac{R_F}{R_1}$
Voltage follower	$v_o = v_S$	1
Ideal Op-Amp Properties		
Open-loop gain A	∞ (practical: 10^5–10^6)	
Input impedance	∞ (practical: $\sim 10^{12}\,\Omega$)	
Output impedance	0 (practical: $<100\,\Omega$)	
Golden Rule 1 (virtual short)	$v_+ - v_- \approx 0$	
Golden Rule 2 (virtual open)	$i_+ = i_- = 0$	

The Culmination of the Learning Journey

This chapter marks the end of the main sequence. The circuit analysis skills developed in Chapter 3, the signal concepts from Chapters 5 and 6, the transient behavior from Chapter 7, and the impedance and filter framework from Chapter 9 all contribute directly to understanding op-amp circuits. Kirchhoff's laws, Ohm's law, and the voltage divider appear again here as the essential tools for working through every example.

The concept of abstraction, present since the very first chapter, reaches its clearest expression in the op-amp. A component containing thirty or more transistors is fully characterized for most purposes by two rules and a few terminal equations.

Beyond This Course

This chapter introduces only the most fundamental op-amp configurations. The concepts developed here form the foundation for a wide range of more advanced topics covered in subsequent courses:

- Integrators and differentiators (op-amp circuits that perform calculus operations on signals)
- Active filters (frequency-selective circuits that do not require inductors)
- Oscillators (circuits that generate periodic signals without an external source)
- Instrumentation amplifiers (precision differential measurement circuits)
- Analog-to-digital and digital-to-analog conversion

The abstraction principle extends into all of these areas: each new application introduces a more capable functional block, but the approach of identifying terminal behavior and applying the golden rules remains the same.

Caution

The ideal model used throughout this chapter simplifies the analysis considerably. Practical op-amp circuits require attention to frequency response (gain-bandwidth product), slew rate, input offset voltage, and supply voltage limitations. Datasheets provide the device-specific parameters needed for detailed design work.

10.5 Where to Learn More

The operational amplifier provides a gateway to advanced analog circuit design. Useful next steps include:

- Analog Devices Electronics I and II: Operational Amplifier Basics, Doug Mercer, Chapter 2 covers integrators, differentiators, and precision applications.
- Essential & Practical Circuit Analysis: Part 2, Op-Amps provides a comprehensive video treatment of practical circuits.
- Instrumentation amplifiers, which combine multiple op-amps for precision sensor measurement, are a natural next topic in analog design courses.

Mastering the material in this chapter provides the tools to engage with all of these topics productively.

Chapter 11

The Signal in the Difference

The op-amp circuits in Chapter 10 share a common characteristic: each amplifier processes a single voltage measured relative to a common ground. Many real-world sensors do not produce a single-ended output of this kind. A strain gauge changes its resistance when a force is applied. A thermocouple produces a small voltage between two metallic junctions at different temperatures. A bridge sensor for a digital scale generates a small differential voltage, a few millivolts, riding on a much larger common-mode voltage, a voltage that appears equally on both output terminals.

Amplifying such signals accurately requires an amplifier designed specifically for this purpose. This chapter develops the instrumentation amplifier from first principles, beginning with the simpler difference amplifier, introducing the Wheatstone bridge as the canonical transducer interface, and then showing how the three-op-amp topology resolves the limitations of the single op-amp approach. The chapter concludes with a practical framework for connecting a sensor, an instrumentation amplifier, and an analog-to-digital converter into a complete signal chain.

11.1 The Difference Amplifier

The most direct way to amplify a voltage difference is to add a single op-amp with four resistors so that it subtracts one input from the other and scales the result. Figure 11.1 shows this configuration.

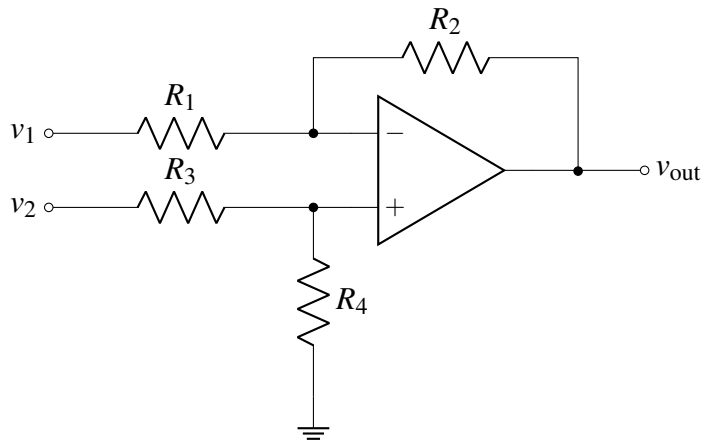

Figure 11.1: Single op-amp difference amplifier. Resistors R_1 and R_2 set the inverting-path gain; R_3 and R_4 set the voltage at the non-inverting input. When the four resistors are matched, the circuit amplifies only the voltage difference $v_2 - v_1$.

Analysis by Superposition

The output of a linear circuit with two independent inputs can be found by analyzing each input separately and summing the results.

Step 1: Set $v_1 = 0$. With v_1 replaced by a short to ground, R_1 connects the inverting input to ground. The non-inverting input sees the voltage divider formed by R_3 and R_4:

$$v_+ = v_2 \cdot \frac{R_4}{R_3 + R_4}.$$

The circuit is a non-inverting amplifier (Section 10.4) with feedback through R_1 and R_2. Its output due to v_2 alone is:

$$v_{\text{out},2} = v_+ \left(1 + \frac{R_2}{R_1}\right) = v_2 \cdot \frac{R_4}{R_3 + R_4} \cdot \frac{R_1 + R_2}{R_1}.$$

Step 2: Set $v_2 = 0$. With $v_2 = 0$, the non-inverting input is connected to ground through R_3 in series with R_4, giving $v_+ = 0$. The circuit is an inverting amplifier with input v_1 through R_1 and feedback through R_2:

$$v_{\text{out},1} = -\frac{R_2}{R_1} v_1.$$

Step 3: Superpose. The total output is:

$$v_{\text{out}} = v_{\text{out},1} + v_{\text{out},2} = -\frac{R_2}{R_1} v_1 + \frac{R_4}{R_3 + R_4} \cdot \frac{R_1 + R_2}{R_1} \cdot v_2. \tag{11.1}$$

Matched Resistors

Setting $R_1 = R_3$ and $R_2 = R_4$ simplifies Equation 11.1. The factor multiplying v_2 becomes:

$$\frac{R_2}{R_1 + R_2} \cdot \frac{R_1 + R_2}{R_1} = \frac{R_2}{R_1}.$$

The output reduces to:

$$v_{\text{out}} = \frac{R_2}{R_1}(v_2 - v_1). \tag{11.2}$$

The gain is R_2/R_1 and the circuit amplifies only the *differential* component $v_2 - v_1$. Any voltage common to both inputs (the common-mode voltage) cancels exactly. Setting all four resistors equal gives a unity-gain difference amplifier: $v_{\text{out}} = v_2 - v_1$.

Two Practical Limitations

Although the single op-amp difference amplifier is straightforward to build, it has two limitations that matter in precision applications.

Limitation 1: Finite input impedance. The non-inverting input loads v_2 through $R_3 + R_4$. The inverting input loads v_1 through R_1. When the source driving v_1 or v_2 has a non-zero output impedance, this loading changes the effective input voltage and therefore the gain. For sensors with source impedances of several kilohms, the resulting error can be significant.

Limitation 2: Sensitivity to resistor mismatch. The cancellation in Equation 11.2 is exact only when $R_1/R_2 = R_3/R_4$ precisely. Physical resistors have tolerances, and any mismatch allows common-mode voltage to appear at the output. Achieving a common-mode rejection ratio (CMRR) greater than 60 dB with discrete resistors requires matched components or a dedicated matched-resistor network.

These two limitations motivate the three-op-amp instrumentation amplifier of Section 11.4.

11.2 The Wheatstone Bridge

Many physical quantities, including force, pressure, and temperature, are most naturally sensed as a change in resistance. A strain gauge is a resistive element whose resistance increases when it is mechanically stretched. A thermistor changes resistance with temperature. The Wheatstone bridge is the standard circuit for converting a resistance change into a measurable voltage difference.

The bridge consists of four resistors arranged in a diamond between a reference voltage V_{ref} and ground. When all four arms respond to the measurand—two increasing by δR and two decreasing by δR in the opposing pattern shown in Figure 11.4—the configuration is called a *full bridge*. The load cell used in this project is a full-bridge device: four strain gauges are bonded to the beam, two on the top surface and two on the bottom (Figure 11.5), so that bending places two gauges in tension and two in compression simultaneously.

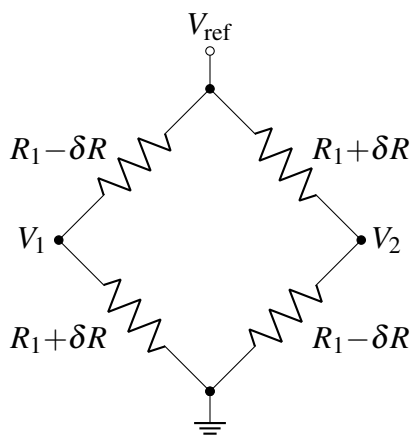

Figure 11.2: Full-bridge Wheatstone bridge circuit consisting of two parallel voltage dividers. All four arms are active: opposing arms change by $+\delta R$ and $-\delta R$ when a load is applied. The measured quantity is the differential output $V_1 - V_2$, which is proportional to δR.

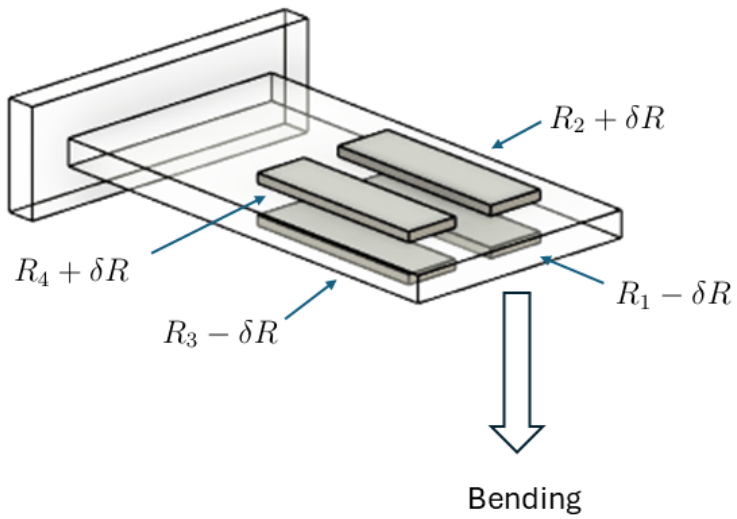

Figure 11.3: Full-bridge Type I load cell. Two strain gauges on the top surface are placed in tension under load ($+\delta R$); two on the bottom surface are placed in compression ($-\delta R$). This opposing arrangement realizes the full-bridge configuration of Figure 11.4 in a single mechanical assembly, and simultaneously rejects axial strain and temperature-induced drift.

The circuit can be analyzed as two voltage dividers connected in parallel between V_{ref} and ground. The left divider has a top resistor $R_1 - \delta R$ and a bottom resistor $R_1 + \delta R$, giving midpoint voltage:

$$V_1 = V_{\text{ref}} \cdot \frac{R_1 + \delta R}{(R_1 - \delta R) + (R_1 + \delta R)} = V_{\text{ref}} \cdot \frac{R_1 + \delta R}{2R_1}.$$

The right divider has a top resistor $R_1 + \delta R$ and a bottom resistor $R_1 - \delta R$, giving:

$$V_2 = V_{\text{ref}} \cdot \frac{R_1 - \delta R}{(R_1 + \delta R) + (R_1 - \delta R)} = V_{\text{ref}} \cdot \frac{R_1 - \delta R}{2R_1}.$$

The differential output is:

$$V_1 - V_2 = V_{\text{ref}} \cdot \frac{(R_1 + \delta R) - (R_1 - \delta R)}{2R_1} = V_{\text{ref}} \cdot \frac{2\,\delta R}{2R_1},$$

which simplifies exactly to:

$$V_1 - V_2 = V_{\text{ref}} \cdot \frac{\delta R}{R_1}. \tag{11.3}$$

The full-bridge arrangement produces this result because all four arms contribute: when two arms increase and two arms decrease, the differential outputs of the two dividers add rather than cancel. A configuration with only one active element and three fixed resistors (a quarter bridge) produces half this output for the same δR, because only one divider changes while the other remains fixed.

Example 11.1: Bridge Output Voltage

A load cell uses a full Wheatstone bridge with nominal resistance $R_1 = 1\,\mathrm{k\Omega}$ and supply $V_{\mathrm{ref}} = 5\,\mathrm{V}$. When the rated load is applied, each active element changes by $\delta R = 2\,\Omega$. Find the differential output voltage.

Solution. Using Equation 11.4:

$$V_1 - V_2 = 5 \cdot \frac{2}{1000} = 10\,\mathrm{mV}.$$

The bridge converts the full rated load into a differential signal of only 10 mV. Both V_1 and V_2 sit near 2.5 V; the common-mode voltage is $V_{\mathrm{ref}}/2$. An amplifier with high CMRR and a gain of at least 330 is required to bring this signal to the full 3.3 V range of a downstream ADC.

Physical Interpretation

The small output voltage in Example 11.1 illustrates a fundamental challenge in sensor interfacing. A typical 12-bit ADC operating from 0 to 3.3 V has a resolution of $3.3\,\mathrm{V}/2^{12} \approx 0.8\,\mathrm{mV}$ per count. A 5 mV signal spans only about six counts out of 4096, which gives an effective resolution of less than three bits. Amplifying the differential signal to span most of the ADC range before digitizing is not optional; it is a design requirement.

Two properties of the instrumentation amplifier are essential in this context. First, the differential gain must be large, on the order of 100 to 1000, to amplify the millivolt bridge output to the volt-level range of the ADC. Second, the CMRR must be high, typically greater than 80 dB, so that the 2.5 V common-mode voltage at the bridge output does not saturate the amplifier or corrupt the measurement.

11.3 The Wheatstone Bridge

Many physical quantities, including force, pressure, and temperature, are most naturally sensed as a change in resistance. A strain gauge is a resistive element whose resistance increases when it is mechanically stretched. A thermistor changes resistance with temperature. The Wheatstone bridge is the standard circuit for converting a resistance change into a measurable voltage difference.

The bridge consists of four resistors arranged in a diamond between a reference voltage V_{ref} and ground. When all four arms respond to the measurand—two increasing by δR and two decreasing by δR in the opposing pattern shown in Figure 11.4—the configuration is called a *full bridge*. The load cell used in this project is a full-bridge device: four strain gauges are bonded to the beam, two on the top surface and two on the bottom (Figure 11.5), so that bending places two gauges in tension and two in compression simultaneously.

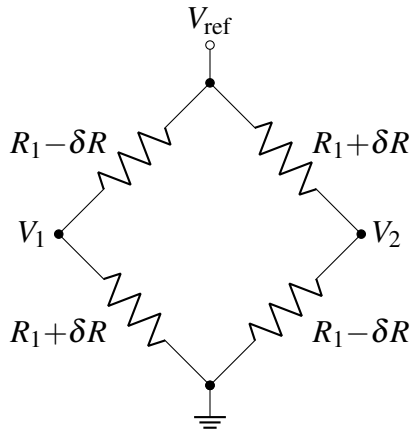

Figure 11.4: Full-bridge Wheatstone bridge circuit consisting of two parallel voltage dividers. All four arms are active: opposing arms change by $+\delta R$ and $-\delta R$ when a load is applied. The measured quantity is the differential output $V_1 - V_2$, which is proportional to δR.

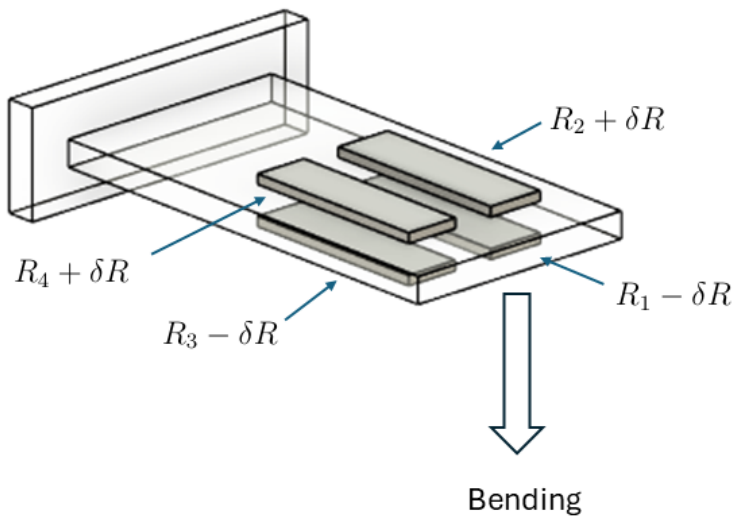

Figure 11.5: Full-bridge Type I load cell. Two strain gauges on the top surface are placed in tension under load ($+\delta R$); two on the bottom surface are placed in compression ($-\delta R$). This opposing arrangement realizes the full-bridge configuration of Figure 11.4 in a single mechanical assembly, and simultaneously rejects axial strain and temperature-induced drift.

The circuit can be analyzed as two voltage dividers connected in parallel between V_{ref} and ground. The left divider has a top resistor $R_1 - \delta R$ and a bottom resistor $R_1 + \delta R$, giving midpoint voltage:

$$V_1 = V_{\text{ref}} \cdot \frac{R_1 + \delta R}{(R_1 - \delta R) + (R_1 + \delta R)} = V_{\text{ref}} \cdot \frac{R_1 + \delta R}{2R_1}.$$

The right divider has a top resistor $R_1 + \delta R$ and a bottom resistor $R_1 - \delta R$, giving:

$$V_2 = V_{\text{ref}} \cdot \frac{R_1 - \delta R}{(R_1 + \delta R) + (R_1 - \delta R)} = V_{\text{ref}} \cdot \frac{R_1 - \delta R}{2R_1}.$$

The differential output is:

$$V_1 - V_2 = V_{\text{ref}} \cdot \frac{(R_1 + \delta R) - (R_1 - \delta R)}{2R_1} = V_{\text{ref}} \cdot \frac{2\,\delta R}{2R_1},$$

which simplifies exactly to:

$$V_1 - V_2 = V_{\text{ref}} \cdot \frac{\delta R}{R_1}. \tag{11.4}$$

The full-bridge arrangement produces this result because all four arms contribute: when two arms increase and two arms decrease, the differential outputs of the two dividers add rather than cancel. A configuration with only one active element and three fixed resistors (a quarter bridge) produces half this output for the same δR, because only one divider changes while the other remains fixed.

Example 11.1: Bridge Output Voltage

A load cell uses a full Wheatstone bridge with nominal resistance $R_1 = 1\,\text{k}\Omega$ and supply $V_{\text{ref}} = 5\,\text{V}$. When the rated load is applied, each active element changes by $\delta R = 2\,\Omega$. Find the differential output voltage.

Solution. Using Equation 11.4:

$$V_1 - V_2 = 5 \cdot \frac{2}{1000} = 10\,\text{mV}.$$

The bridge converts the full rated load into a differential signal of only 10 mV. Both V_1 and V_2 sit near 2.5 V; the common-mode voltage is $V_{\text{ref}}/2$. An amplifier with high CMRR and a gain of at least 330 is required to bring this signal to the full 3.3 V range of a downstream ADC.

11.4 The Instrumentation Amplifier

Instrumentation amplifiers are high-performance differential amplifiers with high input impedance, precise gain, and high common-mode rejection ratio (CMRR). They are particularly well-suited for amplifying low-level signals from sensors in noisy environments.

The configuration in Figure 11.6 places two buffer amplifiers before the differential stage. Each buffer has its own gain resistor R_g connected to ground, providing high input impedance. The overall output is:

$$V_{\text{out}} = \left(1 + \frac{2R_1}{R_g}\right)\left(\frac{R_3}{R_2}\right)(V_2 - V_1). \tag{11.5}$$

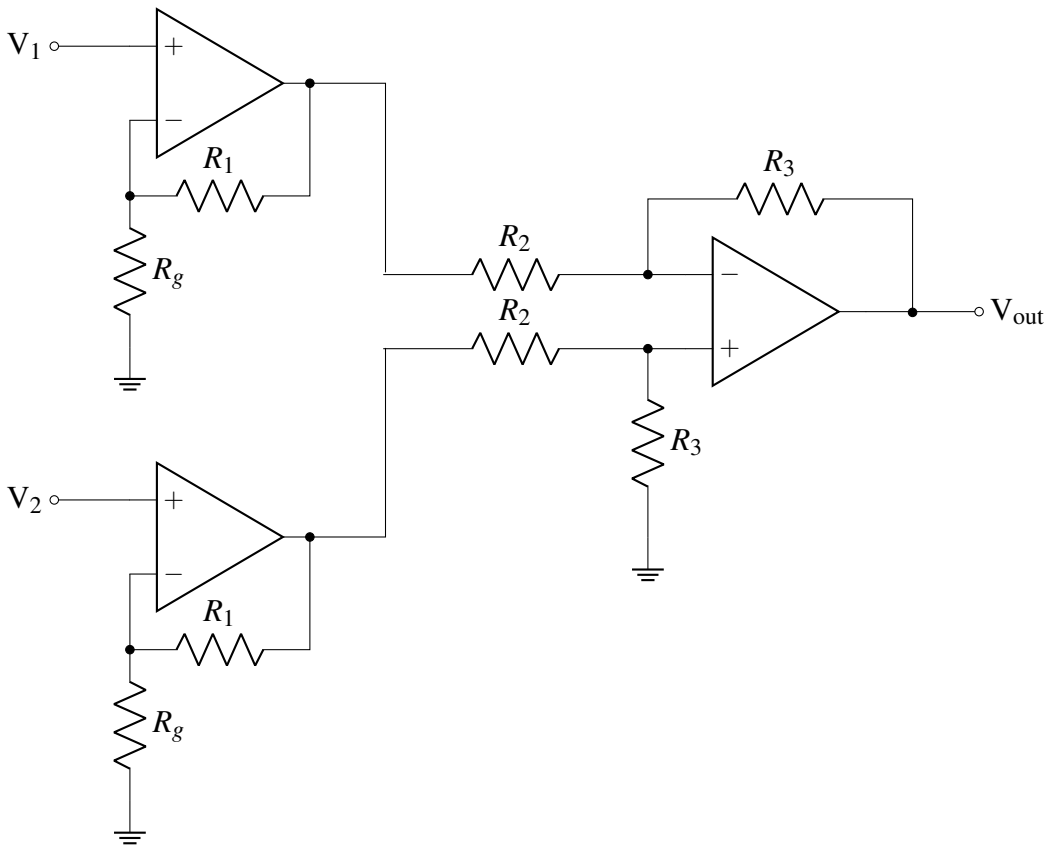

Figure 11.6: Instrumentation amplifier. Each input op-amp has a dedicated gain resistor R_g to ground.

The integrated circuit realization uses the improved topology shown in Figure 11.7. A single resistor R_g connects the two inverting inputs directly, rather than each to ground separately. This arrangement increases the differential-mode gain of the buffer pair while leaving the common-mode gain of the input stage equal to unity, improving CMRR. Applying the Golden Rules to the input stage, the voltage across R_g equals $V_2 - V_1$ exactly, because the virtual short forces each inverting input to follow its respective non-inverting input. The current through R_g flows through both R_1 resistors, so the differential output of the input stage is:

$$V_2' - V_1' = \left(1 + \frac{2R_1}{R_g}\right)(V_2 - V_1).$$

The output difference amplifier then applies a gain of R_3/R_2, giving the overall result:

$$V_{\text{out}} = \left(1 + \frac{2R_1}{R_g}\right)\left(\frac{R_3}{R_2}\right)(V_2 - V_1). \tag{11.6}$$

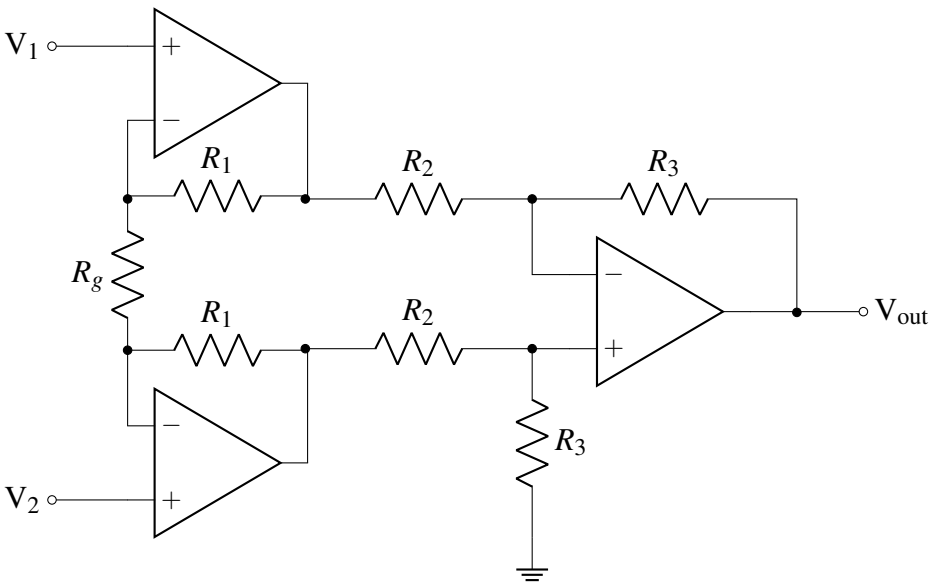

Figure 11.7: Improved instrumentation amplifier. A single resistor R_g connects the two inverting inputs. The differential-mode gain of the input stage is $1+2R_1/R_g$; the common-mode gain is unity.

The gain is adjusted by changing R_g alone. The resistors R_1, R_2, and R_3 are fixed and matched; in an integrated circuit they are laser-trimmed for precision. Changing R_g varies the differential gain without disturbing the resistor ratios that govern the CMRR of the output stage. Figure 11.8 shows the standard schematic symbol for an instrumentation amplifier IC.

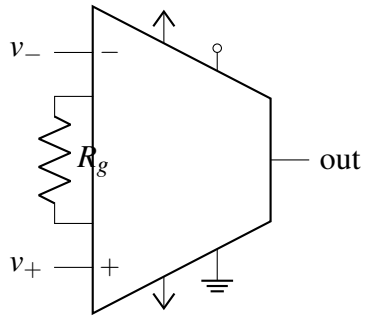

Figure 11.8: Schematic symbol of an instrumentation amplifier IC. The gain-setting resistor R_g connects to two dedicated external pins. Power supply and reference pins are also shown.

Integrated Circuit Realization: INA125

The INA125 is a precision instrumentation amplifier in a single package. Its gain is set by a single external resistor R_g connected between the two dedicated gain pins:

$$G = 4 + \frac{60\,\mathrm{k}\Omega}{R_g}.$$

In any design, the data sheet for the specific device must be consulted. Gain formulas, pin assignments, supply voltage limits, bandwidth, and offset specifications vary across manufacturers and device families. The output swing of the INA125 on a single supply is approximately 1.5 V to 4 V. To bring the signal to a full 5 V range for the M2K 12-bit ADC, the INA125 output

is followed by the summing amplifier of Section 10.4.2, which scales the signal and adds a DC offset to fully utilize the ADC input range.

Gain, Bandwidth, and Anti-Aliasing

Every op-amp has a finite gain-bandwidth product (GBW): as the closed-loop gain increases, the usable bandwidth decreases proportionally. For the INA125 the GBW is approximately 600 kHz. At a gain of $G = 330$, the -3 dB bandwidth is:

$$f_{-3\,\mathrm{dB}} = \frac{\mathrm{GBW}}{G} \approx \frac{600\,\mathrm{kHz}}{330} \approx 1.8\,\mathrm{kHz}.$$

At the higher gains used in this application (up to $G \approx 6000$), the bandwidth narrows to approximately 100 Hz. The INA therefore acts as a low-pass filter whose cutoff frequency is determined automatically by the gain.

A filter placed before the ADC to remove signal content above half the sampling rate is called an anti-aliasing filter; the Nyquist criterion (Section **??**) explains why such filtering is required. For a digital scale, the signals of interest are slow mechanical phenomena with bandwidths well below 10 Hz. At the gains required to amplify the bridge output, the gain-limited bandwidth of the INA125 is already several decades above the signal band and well below the ADC Nyquist frequency. The INA therefore serves as both the signal amplifier and the anti-aliasing filter simultaneously.

No separate anti-aliasing filter is needed for this application. Before finalizing any design, however, verify two conditions: that the signal bandwidth of interest falls within $f_{-3\,\mathrm{dB}}$ so the INA does not attenuate the signal, and that $f_{-3\,\mathrm{dB}}$ is below the Nyquist frequency of the ADC so that noise is rejected before sampling. When both conditions hold, adding a discrete anti-aliasing filter adds cost and complexity without improving performance.

11.5 Optimizing the Signal Chain

The instrumentation amplifier solves the two core problems of bridge sensor interfacing: it provides high differential gain and rejects the common-mode voltage. However, amplifying the signal is only half the problem. For the measurement to be useful, the amplified signal must also be compatible with the input range of the analog-to-digital converter that digitizes it. This section identifies what can go wrong at that interface and develops a systematic approach to resolving it.

ADC Resolution and Dynamic Range

An N-bit analog-to-digital converter maps a continuous input voltage over a full-scale range to one of 2^N discrete integer codes. The size of one step, called the least significant bit (LSB), is:

$$\Delta = \frac{V_{\mathrm{FS}}}{2^N}.$$

The key principle is: *the signal should span the full input range of the ADC*. If the signal occupies only a fraction f of the full scale, the effective number of distinguishable levels is $f \cdot 2^N$ instead of 2^N, and the effective resolution is:

$$N_{\mathrm{eff}} = N + \log_2 f.$$

Since $f \leq 1$, $\log_2 f \leq 0$: bits are lost whenever the signal does not span the full range.

Two Sources of Wasted Range

In bridge-based systems two distinct problems cause the INA output to fall short of the full ADC range, even after amplification.

Problem 1: Amplitude mismatch. The INA output may not span the full V_{FS}. For example, a bridge output of 10 mV amplified by $G = 125$ gives 1.25 V, which uses only 25% of a 5 V ADC range. The effective resolution is $12 + \log_2(0.25) = 10$ bits. Two bits are wasted. The solution is to choose a higher gain, limited only by the output swing of the INA and the available supply voltage.

Problem 2: DC offset. On the split ±5 V supply used in this application, the INA125 reference pin is tied to ground and the output at zero load is approximately 0 V, which sits at the midpoint of the ADC range. As load increases, the output rises into the positive half of the ADC window only. The negative half is never used, and one full bit of resolution is wasted regardless of the gain chosen.

Both problems are visible in Figure 11.9. Correcting them requires a second amplifier stage that shifts the INA output so that zero load corresponds to one boundary of the ADC range and full load reaches the other boundary. A summing amplifier (Section 10.4.2 in Chapter 10) is well suited to this role: it can apply a gain and add a fixed DC offset simultaneously using a single op-amp stage.

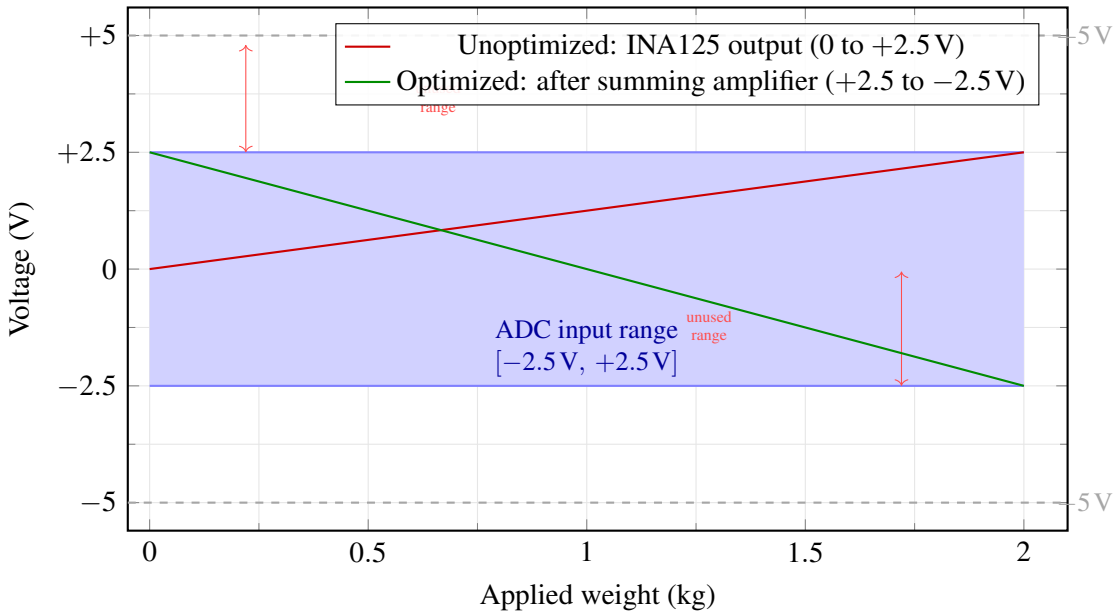

Figure 11.9: Output voltage versus applied weight on a split ±5 V supply. The blue shaded band is the M2K ADC input range (−2.5 V to +2.5 V); dashed lines show the supply rails. Without level shifting (red), the INA125 output spans only the positive half of the ADC range; the lower half is permanently unused. The inverting summing amplifier (green) applies a gain of approximately −1.25 and a DC offset, mapping zero load to +2.5 V and full load to −2.5 V. The inversion is a consequence of the inverting topology and must be accounted for in the calibration software. The complete 5 V ADC window is utilized.

Example 12.2: Signal Chain Design for the Digital Scale

A digital scale uses a full Wheatstone bridge load cell with nominal resistance $R_1 = 1\,\mathrm{k\Omega}$, excited by $V_{\mathrm{ref}} = 5\,\mathrm{V}$. At a 2 kg full-scale load, the bridge differential output is $v_d = 10\,\mathrm{mV}$. The INA125 is powered from $\pm 5\,\mathrm{V}$ with its reference pin (IAref) tied to ground. The M2K ADC has $N = 12$ bits and input range $[-2.5\,\mathrm{V}, +2.5\,\mathrm{V}]$. Design the INA gain and summing amplifier to fully utilize the ADC range.

Step 1: Choose the INA gain. The bridge output spans 0 to 10 mV over the 0 to 2 kg measurement range. With the reference pin at ground, the INA output at zero load is approximately 0 V and rises with increasing load. On a $\pm 5\,\mathrm{V}$ supply the INA125 output swing is approximately $\pm 4\,\mathrm{V}$. The maximum useful gain before the output clips at full load is therefore:

$$G_{\max} = \frac{4\,\mathrm{V}}{10\,\mathrm{mV}} = 400.$$

Select $G = 400$. The INA output then spans $[0\,\mathrm{V}, 4.0\,\mathrm{V}]$ at full scale, within the output swing limit.

Step 2: Design the summing amplifier. The INA output spans $[0\,\mathrm{V}, 4.0\,\mathrm{V}]$ but the ADC expects $[-2.5\,\mathrm{V}, +2.5\,\mathrm{V}]$. The inverting summing amplifier output is:

$$v_{\mathrm{ADC}} = -\frac{R_f}{R_a} v_{\mathrm{INA}} - \frac{R_f}{R_b} V_{\mathrm{offset}}.$$

Two conditions fix the two unknowns R_f/R_a and R_f/R_b:

- Zero load ($v_{\mathrm{INA}} = 0\,\mathrm{V}$) must map to $v_{\mathrm{ADC}} = +2.5\,\mathrm{V}$.
- Full load ($v_{\mathrm{INA}} = 4.0\,\mathrm{V}$) must map to $v_{\mathrm{ADC}} = -2.5\,\mathrm{V}$.

Subtracting the two equations gives the signal gain:

$$\frac{R_f}{R_a} = \frac{5.0\,\mathrm{V}}{4.0\,\mathrm{V}} = 1.25.$$

Using the $-5\,\mathrm{V}$ supply rail as V_{offset} and substituting the zero-load condition:

$$-\frac{R_f}{R_b}(-5\,\mathrm{V}) = +2.5\,\mathrm{V} \implies R_b = 2R_f.$$

The complete transfer function is:

$$v_{\mathrm{ADC}} = -1.25\, v_{\mathrm{INA}} + 2.5\,\mathrm{V}.$$

Verification: at $v_{\mathrm{INA}} = 0$, $v_{\mathrm{ADC}} = +2.5\,\mathrm{V}$; at $v_{\mathrm{INA}} = 4.0\,\mathrm{V}$, $v_{\mathrm{ADC}} = -1.25 \times 4.0 + 2.5 = -2.5\,\mathrm{V}$. ✓

The output is *inverted*: a heavier load produces a more negative ADC reading. This is a direct consequence of the inverting topology and is not a fault. The calibration software must account for the negative slope when converting ADC counts to weight.

Step 3: Effective resolution. The signal now spans the full 5 V ADC input range across 4096 levels:

$$\Delta = \frac{5\,\text{V}}{4096} \approx 1.2\,\text{mV per count},$$

corresponding to a weight resolution of:

$$\frac{2000\,\text{g}}{4096} \approx 0.49\,\text{g per count}.$$

This is the theoretical limit imposed by the ADC. Noise, component tolerances, and load cell non-linearity will raise the practical resolution floor above this value.

Design Priorities

Several practical considerations guide signal chain design.

Set the INA gain first. The INA provides differential gain and CMRR simultaneously. Maximize the gain within the limits set by the gain-bandwidth product and the available output swing on the chosen supply voltage.

Check the output swing against the supply. On a split ± 5 V supply, the INA125 output swing is approximately ± 4 V. Select the gain so that the full-scale output remains within this limit.

Configure the reference pin correctly. On a split supply, the INA125 reference pin (IAref, pin 5) must be connected to ground. This sets the output at zero load to approximately 0 V, enabling symmetric operation around ground.

Use the summing amplifier for offset and scale. Fine-tuning the gain and offset in the analog domain before the ADC is more efficient than attempting to correct for a poorly scaled signal in software. Each bit of resolution lost due to a mismatched signal chain requires doubling the number of ADC samples to recover the same noise floor by averaging.

Match the ADC supply. Where possible, use the ADC supply as the bridge reference V_{ref}. This ratiometric connection causes supply voltage variations to affect both the bridge output and the ADC reference equally, so their ratio, and therefore the measurement reading, remains stable.

Protect the ADC inputs. A resistor in series with the ADC input and two diodes to the supply and ground rails limits the voltage seen by the ADC in the event of an overload. This is standard practice in any interface between a high-gain analog chain and an ADC.

Chapter Summary

This chapter developed the amplifier chain needed to connect a resistive sensor to a digital measurement system. The single op-amp difference amplifier provides differential gain but suffers from finite input impedance and sensitivity to resistor matching. The Wheatstone bridge converts a resistance change into a small differential voltage while a common-mode voltage of approximately $V_{\text{ref}}/2$ appears on both output terminals. The three-op-amp instrumentation amplifier solves both limitations of the single op-amp circuit: its input impedance is ideally infinite, its differential gain is set by a single resistor R_G, and its CMRR is determined by the precision of the on-chip output stage resistors. The signal chain is completed by a summing amplifier that removes the DC offset and scales the signal to fill the ADC input range, maximizing effective resolution.

Table 11.1: Key formulas for Chapter 11.

Quantity	**Formula**	**Notes**
Difference amp output	$v_{\text{out}} = \frac{R_2}{R_1}(v_2 - v_1)$	Matched: $R_1 = R_3$, $R_2 = R_4$
Bridge output (full bridge)	$V_1 - V_2 = V_{\text{ref}} \frac{\delta R}{R_1}$	Exact result
IA gain	$G = \frac{R_3}{R_2}\left(1 + \frac{2R_1}{R_g}\right)$	Adjust R_g to set gain
Summing amp output	$v_{\text{out}} = -R_f\left(\frac{v_1}{R_1} + \frac{v_2}{R_2}\right)$	See Section 10.4.2
ADC resolution	$\Delta = V_{\text{FS}}/2^N$	One LSB
Effective bits lost	$N - N_{\text{eff}} = -\log_2 f$	f = fraction of range used