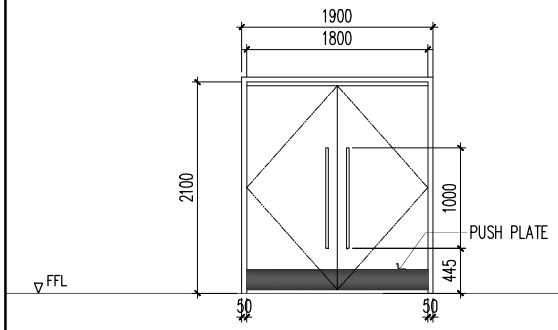

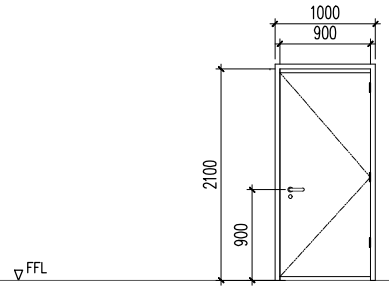

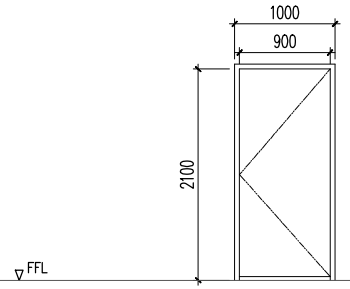

MARK	D-1 / 1800	
DESCRIPTION	APPROX. 100mm THK. DOUBLE LEAF, SINGLE SWING DOOR IN ACOUSTIC PANEL FINISH INSIDE THE CINEMA AND FINISH TO MATCH AMENITIES OUTSIDE THE CINEMA; SOUND TRANSIMISSION CLASS 55 (STC 55)	
LOCATION	CINEMA 1-2 ENTRANCES, CINEMA 1-2 FOYER ENTRANCES	
QUANTITY	4 SETS	
SWING ACTION	SINGLE SWING ; 180 °	
DOOR LEAF FINISH	FIRE RATED FABRIC INSIDE CINEMA AND FINISH TO MATCH AMENITIES OUTSIDE CINEMA	
DOOR FRAME/ FINISH	AS PER MANUFACTURER'S RECOMMENDATION	
HARDWARE	HINGE	FULL MORTISE, HEAVY WEIGHT BALL BEARING HINGE BY 'HAGER' IN STAINLESS STEEL SATIN FINISH OR APPROVED EQUAL
	HANDLE/ LOCKSET	STAINLESS STEEL PULL BARS
	DOOR CLOSER	SURFACE MOUNTED OVERHEAD POSITION

MARK	D-2 / 900	
DESCRIPTION	45mm THK. HOLLOW CORE DOOR	
LOCATION	AUX. ROOMS	
QUANTITY	2 SETS	
SWING ACTION	SINGLE SWING	
DOOR LEAF FINISH	PLASTIC LAMINATE FINISH	
DOOR FRAME/ FINISH	FROM 50 TO 150mm TREATE KD WOOD IN SPRAY PAINT FINISH TO MATCH PLASTIC LAMINATE	
HARDWARE	HINGE	FULL MORTISE, HEAVY WEIGHT BALL BEARING HINGE BY 'HAGER' IN STAINLESS STEEL SATIN FINISH (3 NOS. PER DOOR) OR APPROVED EQUAL
	HANDLE/ LOCKSET	STAINLESS STEEL LEVER HANDLES WITH LOCKSET AND MORTISE DOOR LATCH
	DOOR CLOSER	

MARK	D3 / 900	
DESCRIPTION	45mm THK. HOLLOW CORE DOOR SINGLE LEAF SINGLE SWING DOOR IN ACOUSTIC PANEL FINISH INSIDE CINEMA	
LOCATION	INSIDE CINEMA SECRET DOOR	
QUANTITY	TWO SETS	
SWING ACTION	SINGLE SWING	
DOOR LEAF FINISH	ACOUSTIC PANEL FINISH	
DOOR FRAME/ FINISH	FROM 50 TO 150mm TREATE KD WOOD IN ACOUSTIC PANEL FINISH INSIDE CINEMA	
HARDWARE	HINGE	CONCEALED MORTICE / SOSS DOOR HINGE,
	HANDLE/ LOCKSET	
	DOOR CLOSER	

1 / A-004.0

DOOR SCHEDULE

SCALE: 1:50 MTS.

CONSULTANT

ARRAYSTECH DIGITAL SYSTEMS INC.
NO. 16 BAYANIHAN ST., WEST TRIANGLE HOMES, QC, PHILIPPINES
E-mail address: admin@arraystech.com Tel. no.: 283-4156; 366-1597
E-mail address: info@mydigitalcinema.net Tel. no.: 366-1598 / 3661599
Web Site: www.arraystech.com

SEC.25 R.A. 545

DRAWINGS AND SPECIFICATIONS DULY SIGNED,STAMPED OR SEALED AS INSTRUMENTS OF SERVICE ARE THE PROPERTY AND DOCUMENTS OF THE ARCHITECT,WHETHER THE OBJECT FOR WHICH ARE THEY ARE MADE IS EXECUTED OR NOT. IT SHALL BE UNLAWFUL FOR ANY PERSON WITHOUT THE WRITTEN CONSENT OF THE ARCHITECT TO DUPLICATE OR TO MAKE COPIES OF SAID DOCUMENTS USE IN THE REPETITION OF AND FOR OTHER PROJECTS OR BUILDINGS EXECUTED PARTLY OR IN WHOLE.

APPROVED BY:

PRESIDENT

REY DEL POSO

ARCHITECT

MICAELA FRANCESCA REYES

PROJECT TITLE

PROPOSED
PUREGOLD BAYAWAN CINEMAS
DOOR SCHEDULE

LOCATION

BAYAWAN CITY, NEGROS ORIENTAL

PROJECT OWNER

S I G N A T U R E

DESIGNED	ADSIDESIGN
DATE	17-Jun-19
CAD BY	GCDC
REV. DATE	17-Jun-19
PROJECT#	----
NOTE:	A3 PRINT

SHEET NO.

A-004.0

SCHEME 1A

PP____OF____

PLOT DATE: 17-Jun-19

FOR CONSTRUCTION
DATE:6-18-2019 RELEASED BY: ADSI