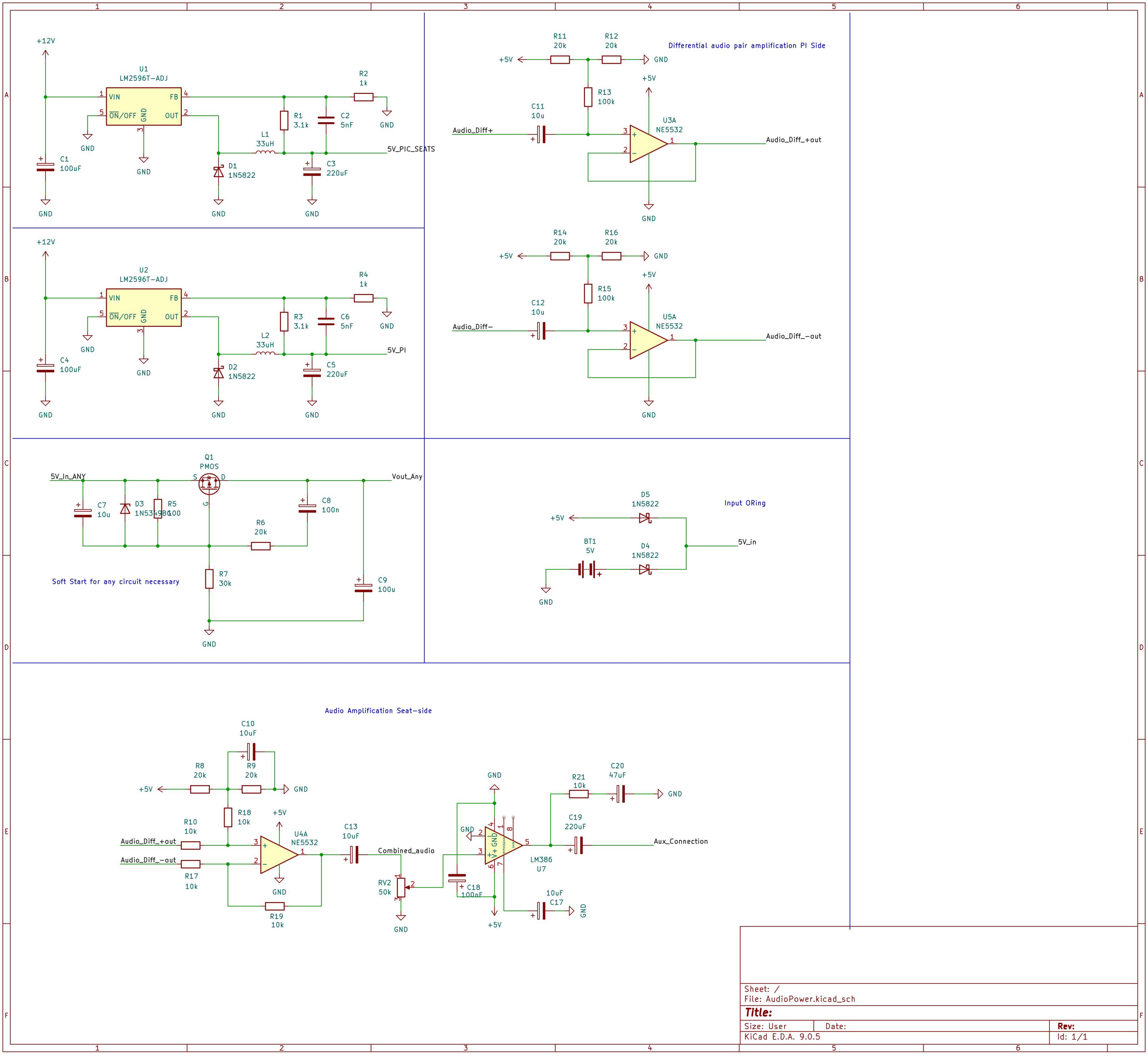

Sheet: /
File: AudioPower.kicad_sch

Title:

Size: User	Date:	Rev:
KiCad E.D.A. 9.0.5		Id: 1/1

Peripherals Module

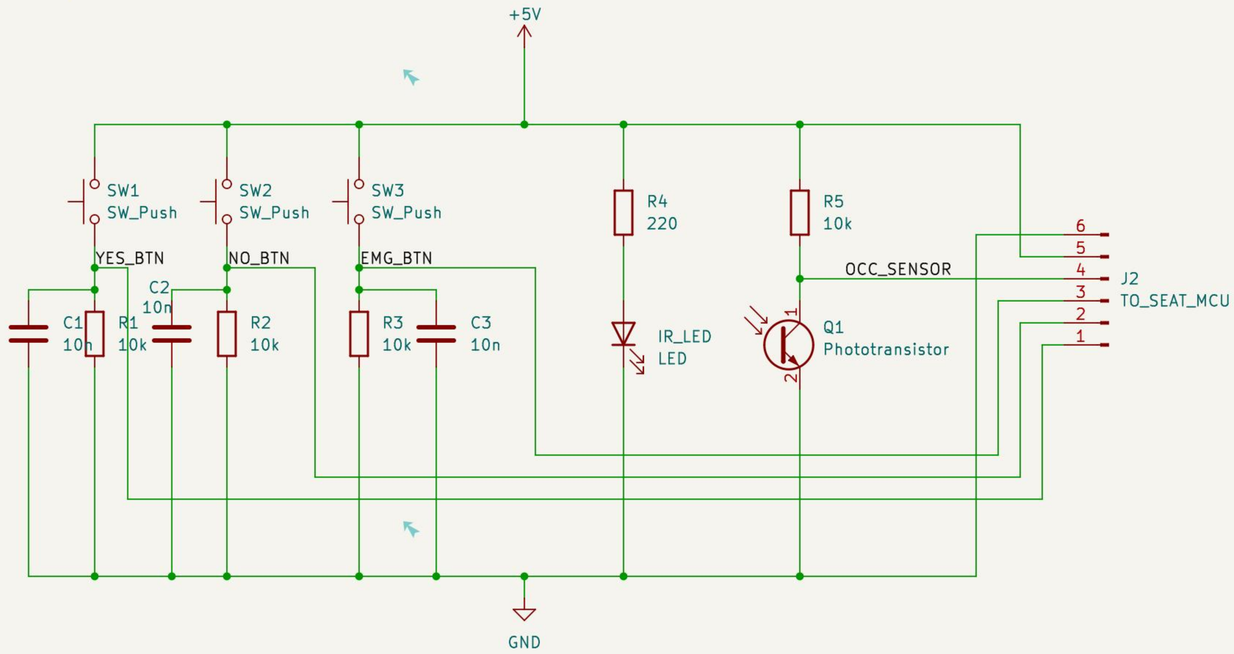

Sheet: /
File: sigma3-castẽlao.kicad_sch

Title:

Size: A4	Date:	**Rev:**
KiCad E.D.A. 8.0.8		Id: 1/1