Software Engineering for HPC - Notes

260236

April 2024

Preface

Every theory section in these notes has been taken from two sources:

- None

About:

GitHub repository

Contents

1 Introduction

1.1 The importance of software engineering

Software engineering is so important because it is everywhere. Our society is now totally dependent on software-intensive systems. Think about it. The society could not function without software, for example:

- Transportation systems;
- Energy systems;
- Manufacturing systems.

For these reasons, **software failures cannot be tolerated**.

In the following list, we can see some famous software issues:

- **911 Outage on April 2014**. On 10th April 2014, Washington State had no 911 service for six hours. A software issue causes this event. The software dispatching the calls had a counter used to assign a unique identifier to each call. The counter went over the threshold defined by developers. All calls from that moment on were rejected.

  More info is here.

- **Ariane 5, 1996**. On 4th June 1996, forty seconds after take off, Ariane 5 broke up and exploded. The total cost for developing the launcher has been 8000 million dollars. The launcher contained a cluster of satellites for 500 million dollars. Again, the explosion was caused by software failure.

  More info is here: accident tech report and video.

1.2 Software engineering: definition

There are some fields of computer science dealing with software systems:

- Large and complex;
- Built by teams;
- It exists in many versions;
- Last many years;
- Undergo changes.

In each field, a software engineer needs to have some skills. In contrast to a *programmer* that has the following abilities:

- They develop a complete program;
- They work on known specifications;
- They work individually.

A **software engineer** has the following **skills**:

- **Identifies** *requirements* and develops *specifications*;
- **Designs** a component to be combined with other components, developed, maintained, and used by others; component can become part of several systems;
- **Works in a team**.

We can summarize the skills of a software engineer as follows:

- Technical
- Project management
- Cognitive
- Enterprise organization
- Interaction with different cultures
- Domain knowledge

The **main goal** of a software engineer is to **develop software products**. Not only is the product significant, but the **process is also fundamental**. The quality of the process affects the quality of the product.

1.3 The software product and the process

The product developed by a software engineer differs from traditional product types. It isn't easy to describe and evaluate because it is intangible. Some **aspects affecting the product quality**:

- **Development technology**;
- **Process quality**;
- **People quality**;
- **Cost, time and schedule**.

1.3.1 ISO/IEC 25010

An ISO (International Organization for Standardization) called **ISO/IEC 25010** comprises the **nine quality characteristics**:

SOFTWARE PRODUCT QUALITY								
FUNCTIONAL SUITABILITY	PERFORMANCE EFFICIENCY	COMPATIBILITY	INTERACTION CAPABILITY	RELIABILITY	SECURITY	MAINTAINABILITY	FLEXIBILITY	SAFETY
FUNCTIONAL COMPLETENESS FUNCTIONAL CORRECTNESS FUNCTIONAL APPROPRIATENESS iso25000.com	TIME BEHAVIOUR RESOURCE UTILIZATION CAPACITY	CO-EXISTENCE INTEROPERABILITY	APPROPRIATENESS RECOGNIZABILITY LEARNABILITY OPERABILITY USER ERROR PROTECTION USER ENGAGEMENT INCLUSIVITY USER ASSISTANCE SELF-DESCRIPTIVENESS	FAULTLESSNESS AVAILABILITY FAULT TOLERANCE RECOVERABILITY	CONFIDENTIALITY INTEGRITY NON-REPUDIATION ACCOUNTABILITY AUTHENTICITY RESISTANCE	MODULARITY REUSABILITY ANALYSABILITY MODIFIABILITY TESTABILITY	ADAPTABILITY SCALABILITY INSTALLABILITY REPLACEABILITY	OPERATIONAL CONSTRAINT RISK IDENTIFICATION FAIL SAFE HAZARD WARNING SAFE INTEGRATION

Figure 1: ISO/IEC 25010

1.3.2 Productivity

A process quality to consider is **productivity** (the **process of producing a product**). The definition can be: "ability to produce a good amount of product". To **measure it**, we can use **delivered items by unit of effort**, where:

- **Delivered items**: lines of code (and variations) function points;
- **Unit of effort**: person month (note: persons and months cannot be interchanged).

1.3.3 Timeliness

Another process quality to consider is timeliness. The definition is: "**the ability to respond to change requests in a timely fashion**".

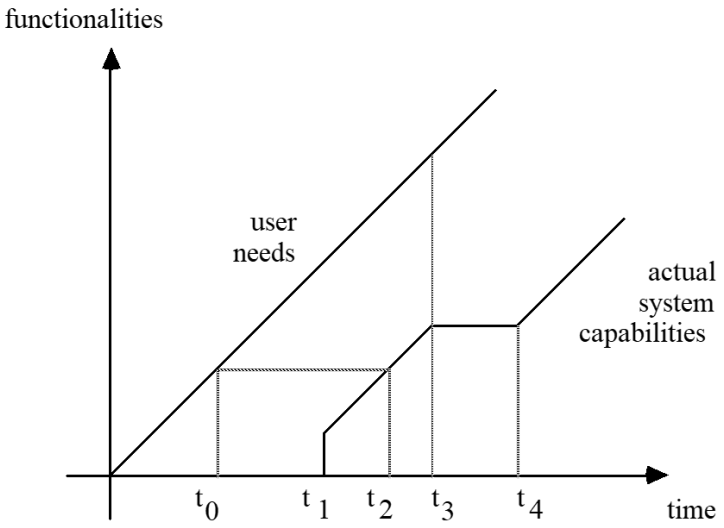

As you can see by the graph, the "*user needs*" is a linear function (and sometimes can be exponential!). A software engineer should be able to respond to the client's requests as soon as possible. As the graph shows, a request made on time t_0 is completed on time t_2; but another request can be made at that time, and so on. The actual system capabilities can't grow up always because sometimes there are "brainstorming times" to increase product quality (ISO/IEC 25010).

1.4 Software Lifecycle

Initially, no reference model is inside a software lifecycle: code and fix (or refactoring). However, a traditional waterfall model is chosen to react to the many problems that a software engineer faces.

1.4.1 Waterfall model

The **waterfall model** is a **breakdown of development activities into linear sequential phases**, meaning they are passed down onto each other, where each phase depends on the deliverables of the previous one and corresponds to a specialization of tasks. [1] Its organization is the following:

- High phases:
  - **Feasibility Study**: this is a **cost-benefit analysis**.

    The ***main goal*** is determining whether the project should be started (e.g. buy or make), possible alternatives, and needed resources.

    The ***outcome*** is a **feasibility study document**. This paper provides:
    * A preliminary problem description;
    * Some scenarios describing possible solutions;
    * Costs and schedules for the different alternatives.
  - **Requirements Analysis and Specification**: this is an **analysis of the domain in which the application takes place**.

    The ***main goal*** is to **identify requirements** and **derive specifications for the software**. Note these specifics require a (continuous) interaction with the user and an understanding of the properties of the domain.

    The ***outcome*** is a particular document called **Requirements Analysis and Specification Document** (RASD).
  - **Design**: this is the **definition of the software architecture**. There, the definition of components (modules) and the relations/interactions among these components.

    The ***main goal*** is to **support the concurrent development of separate responsibilities**.

    The ***outcome*** is a summary of this info in a **design document**.
- Low phases:
  - **Coding and Unit Test**: each module is **implemented using the chosen programming language**. Furthermore, each module is **tested in isolation** by the module developer. Also, the programs should include their documentation.
  - **Integration and System Test**: the modules are **integrated into (sub)systems**. The integrated (sub)systems are **tested**. Follows an incremental implementation scheme. A complete system test is needed to verify the overall properties. Note that sometimes we have alpha test and beta test.

- **Deployment**: is the process used to conceive, specify, design, program, document, test, and bug fix to create and maintain applications, frameworks, or other software components.
- **Maintenance**: the maintenance is divided into **two types**:
  * **Corrective** deals with the **repair of faults or defects found**.
  * **Evolution** is also divided into **three types**:
    · ***Adaptive*** maintenance: consists of **adapting software to changes in the environment** (the hardware or the operating system, business rules, government policies).
    · ***Perfective*** maintenance: mainly deals with accommodating **new or changed user requirements**.
    · ***Preventive*** maintenance: concerns activities aimed at **increasing the system's maintainability**.

⚠ Problems derived from correction and evolution

Note: the **distinction between correction and evolution can be unclear** because specifications often must be completed and clarified. This causes problems because specs are usually part of a developer and customer contract.

- **Early frozen specs** can be problematic because they are more likely to be wrong.
- Another problem is **software evolution** because **it is never anticipated or planned**. Since the software is easy to change, often, under emergency, changes are applied directly to code, and consequently, the state of project documents is inconsistent.

✔ Solutions - Best practices

Some good engineering practices exist to solve the evolution problem: **first, modify the design, then change implementation and apply changes consistently in all documents**. Also, the **software must be designed to accommodate changes cost-effectively**. This is one of the *main goals* of software engineering.

✔ Flexible processes

We can make the **waterfall model more flexible**. In this case, the **main goal is to adapt to changes (especially in requirements and specs)**. The idea is that the stages are **not necessarily sequential**, and **processes** become **iterative and incremental**.

2 HPC Software, Relevant Qualities and Systems Engineering Methods

2.1 High Performance Computing Software

There's no single definition of HPC, but it can be explained in a number of ways:

Definition 1

The practice of aggregating computing power in a way that delivers much high performance than one could get out of a typical desktop computer or workstation to solve large problems in science, engineering, or business.

Thousands of processors working in parallel to analyze billions of pieces of data in real time, performing calculations thousands of times faster than a normal computer.

The use of parallel processing for running advanced, large-scale application programs efficiently, reliably and very quickly on supercomputer systems.

The platform technology concerned with programming for performance, where performance takes the broad meaning of:

- Speed (reducing time to solution);
- Energy efficiency (doing more with less power);
- Upscaling (handling larger problems such as simulating a wing aand then a full plane, or a cell and then an organ);
- High throughput (the ability to handle large volumes of data in near real-time, as required in the financial services industry, telecoms or satellite imagery).

As **Parallel and Distributed Computing (PDC)** exist, it is necessary to explain the difference. The main characteristics of PDC are:

- **Concurrency**: it is a property of software. **A piece of software is also concurrent if it can have more than one active execution context**.
- **Parallelism**: it is a property of software. **The execution of different tasks/pieces of software at the same time**.
- **Distribution**. **The execution of different tasks/pieces of software on physically distinct computing nodes connected through a network, lack of a global clock**.

PDCs are **multi-core machines**, whereas **HPCs** are **quantum computers**. However, **both share parallel machines**, **HPC clusters** and **cloud infrastructures**.

There are **two categories** of HPC software:

- **Compute-intensive applications**. These are **complex calculations that require a large number of computing resources**. They also often require parallel computing.
- **Data-intensive applications**. They **focus on processing, storing and retrieving large amounts of data**. Typically built as distributed systems to ensure reliability and scalability.

2.2 Relevant Qualities

For the two categories explained, there are some important characteristics:

- For **Compute-intensive applications**:
  - **Correctness**: the **software is correct if it satisfies the specifications**, but be careful! Sometimes, modelling reality into a model (using the specifications) isn't the bigger problem. Instead, it is difficult or impossible to show actual correctness concerning reality. For **example**, imagine you are building a simulator of a planet lander before you have ever visited it.

    How can you fix this issue? We can **check that the software output fulfils the important desired properties** and **identify and apply a measure of accuracy**.
  - **Performance**: it is the **efficient use of resources**. Again, be careful! Is it a good idea? Is performance improvement always a good idea? Because it is **not necessarily if**:
    * It makes software **more difficult to read** and **maintain**
    * It **reduces the portability** of software
  - **Portability**.
  - **Maintainability**. A system can have this feature if it follows **three principles**:
    1. **Operability**: **make it easy for the operations team to run the system and keep it running**. There are a number of things that need to be done to achieve this:
       * Provide visibility into the runtime behavior and internals of the system, with good monitoring.
       * Provide good support for automation and integration with standard tools.
       * Avoidance of dependencies on individual machines (allowing machines to be taken down for maintenance while the system as a whole continues to run uninterrupted).
       * Provide good documentation and an easy to understand operational model ("If I do X, Y will happen").
       * Provide good default behavior, but also give administrators the freedom to override defaults when necessary.
       * Self-healing when appropriate, but also giving administrators manual control over system state when needed.
    2. **Simplicity**: **make it easy for other software engineers to understand the system**. This is necessary because complex systems take more time to understand and increase the cost of maintenance. There are several techniques for doing this:
       * Reducing *accidental complexity*.
       * Using abstractions, such as organising the architecture into well-defined components that hide the internal complexity behind a clear and easy-to-use interface; or reusing known solutions.

3. **Evolvability**: make it easy for engineers to change the system as new requirements emerge. There are a number of things that need to be done to achieve this:
    * Organize your development process to cope with evolution.
    * Keep track of how requirements are mapped to your software structure.
    * Update documentation.
    * Continue to ensure simplicity and operability.

- For **Data-intensive applications**:
  - **Reliability**: can be mathematically defined as **probability of absence of failures for a certain period**. The typical expectations are:
    * The application **performs the expected function**
    * It can **tolerate mistakes by users**
    * It **prevents unauthorized access** and **abuse**
  - **Scalability**: the **system ability to cope with increased load**. The load unit depends on the product: for web apps can be represented with the number of requests per second; for databases can be the number of read and write operation (or their ratio).
  - **Maintainability**. Same as above.

In the software, there can be some errors, but a software engineer should be able to recognize the type of failure, faults or defects:

- A **defect** is an **imperfection or deficiency in a work product** where that work product does not meet its requirements or specifications and needs to be either repaired or replaced.
- A **defect encountered during software execution** is a **fault** (a fault is a subtype of defect, and can be of two types, see below).
- A **system failure** can be:
  - Termination of the ability of a product to perform a required function or its inability to perform within previously specified limits.
  - An event in which a system or system component does not perform a required function within specified limits.

There are some exceptions where systems are **fault-tolerant** or **resilient**. These are systems that can **cope with faults and prevent faults from occurring**. An **advantage of fault-tolerance** is that **reliability is increased**.

The **fault** can be of **two types**:

- **Hardware Faults**.

  Description of the problem

  It is a defect encountered during hardware execution. In a large datacenter these can happen on a daily basis. Different pieces of hardware usually fail independently from each other.

  Possible solutions

  The possible solutions are two: **hardware redundancy** and **software fault-tolerance techniques**.

- **Software Faults**.

  Description of the problem

  They result from **software development errors**. Can stay dormant for a long time and appear suddenly. They can **determine failures in multiple components** at the same time.

  Possible solutions

  There is no single solution! It is a combination of strategies. So use defensive programming, by testing before release and during operation:

  - Reboot the system frequently (rejuvenation)
  - Continuous monitoring and alerting in case of possible symptoms
  - Deliberately introduce failures to train the fault tolerance machinery (chaos engineering)

2.3 Systems Engineering Methods

There are several systems engineering methodologies required in High Performance Computing:

- Modelling the software structure and checking its properties.
- Performance analysis and improvement.
- Source code management.
- Documentation, standards, support to maintainability.
- Support to scalability.
- Attention to operability and automation.

3 Requirement Engineering

3.1 Definition

Before the definition, we give a possible scenario to understand what requirement engineering is.

The municipality of Milan says the following: "*The time it takes to make decisions on building permits for residential buildings in the city is too long. We want to develop software that will help us reduce this time*". So where do we start? How do we identify the most important aspects? How do we make sure that we have understood what our customers want from us?

Definition 1

Software measure engineering (**Requirement Engineering**) is the process of discovering the purpose for which the software is intended by identifying stakeholders and their needs, and documenting these in a form suitable for analysis, communication and subsequent implementation.

The questions derived from requirements engineering are:

- Identify stakeholders
- Identify their needs
- Produce documentation
- Analyze, communicate, implement requirements

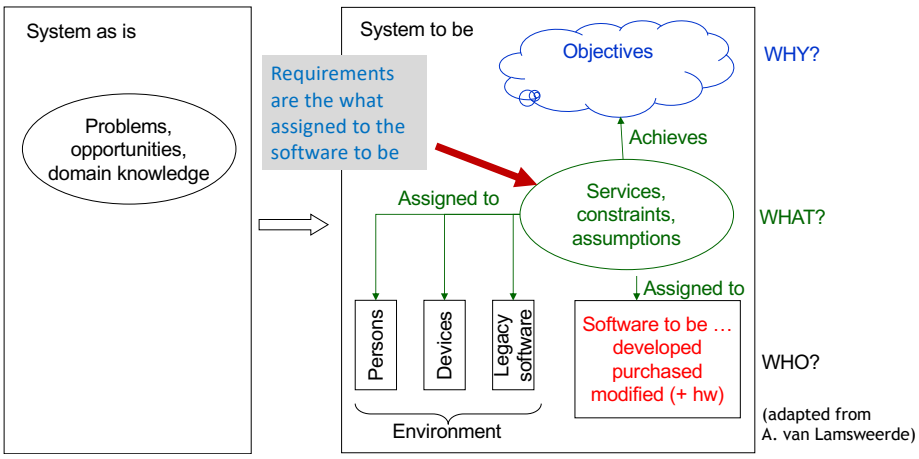

Figure 2: Analyzing the system as is and the system to be.

3.2 Studying the interplay between the world and the machine

Example 1: ambulance dispatching system

For every urgent call reporting an incident, an ambulance should arrive at the incident location within 14 minutes. For every urgent call, details about the incident are correctly encoded.
When an ambulance is dispatched, it will reach the incident location in the shortest possible time. Accurate ambulance locations are known by GPS. Ambulance crews correctly notify ambulance availability through a mobile data terminal.

Given the previous problem, are you able to extract requirements from this description? Some possible questions might be:

- Should the software system drive the ambulance?
- Who or what will "correctly encode" details about incidents?
- Do terminals already exist or not?

And more in general:

- What are the boundaries of the system? What is inside/outside? What is in-between?
- How do we think about these aspects in a systematic way?

This example is necessary to understand the **phenomena of world and machine**. The **machine is the part of the system to be developed** (typically a software-to-be and a hardware). The **world** (or environment) **is the part of the real world that is affected by the machine**.

Requirements engineering is **concerned with the phenomena that occur in the world**. In the previous **example**, RE is concerned with the following phenomena:

- Occurrence of incidents
- Reports of incidents by public calls
- Encoding of call details into dispatching software
- Assignment of an ambulance
- Arrival of an ambulance at the scene of an incident

But RE is also interested in the phenomena that occur inside the machine. In the previous **example**

- The creation of a new object of the class `Incident`
- The updating of a database entry

Requirements models are models of the world!

Using the **example** on the previous page, we can show the phenomena we are interested in the world or in the machine set.

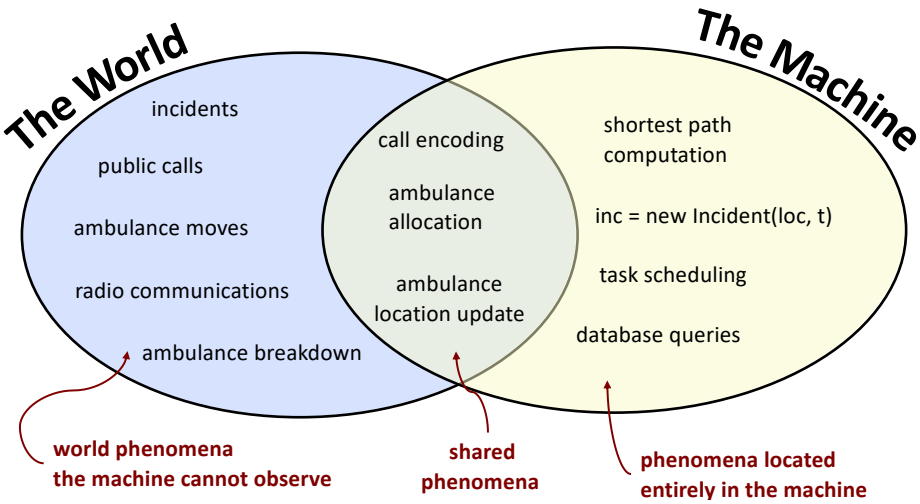

Figure 3: The world and the machine sets, with reference to example on page 17.

More generally, we can divide the machine and the world sets as:

- The world which have goals and domain properties;
- The machine which have computers and programs;
- The requirements which is the bridge between the world and the machine.

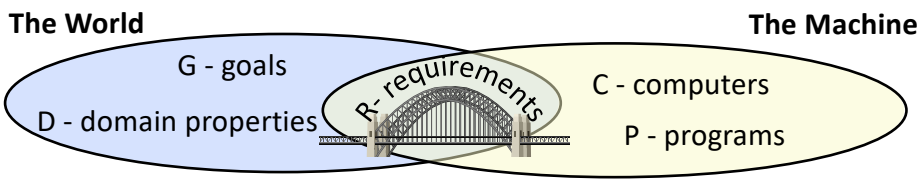

Figure 4: Goals, domain properties, requirements, computers and programs.

We explain more detailed these value inside the two sets:

- **Goals** are **prescriptive assertions formulated in terms of world phenomena** (not necessarily shared)
- **Domain properties** (or assumptions) are **descriptive assertions assumed to hold in the world**
- **Requirements** are **prescriptive assertions formulated in terms of shared phenomena**

Using the **example** on the page 17, we can identify the goal, the domain assumptions and the requirement as follows:

- **Goal**: *For every urgent call reporting an incident, an ambulance should arrive at the incident scene within 14 minutes.*
- **Domain assumptions**:
  - *For every urgent call, details about the incident are correctly encoded.*
  - *When an ambulance is mobilized, it will reach the incident location in the shortest possible time.*
  - *Accurate ambulances' location are known by GPS.*
  - *Ambulance crews correctly signal ambulance availability through mobile data terminals on board of ambulances.*
- **Requirement**: *When a call reporting a new incident is encoded, the Automated Dispatching Software should mobilize the nearest available ambulance according to information available from the ambulances' GPS and mobile data terminals.*

3.2.1 Completeness of Requirements

Given the set of requirements **R**, goals **G** and domain assumptions **D**.

Definition 2

We say that **R** is **complete** <u>if and only if</u>:

- **R** ensures satisfaction of **G** in the context of domain assumptions **D**

$$\mathbf{R} \text{ and } \mathbf{D} \mid = \mathbf{G}$$

  We can make an analogy with program correctness. A program P running on a particular computer C is correct if it satisfies the requirement R: P and C $\mid =$ R.

- **G** captures all the **stakeholders' needs**.
- **D** represents **valid properties/assumptions about the world**.

3.3 Formulating and classifying requirements

The requirements can be of three types:

- **Functional requirements**: describe the interactions between the system and its environment (independent from implementation). In other words, are the **main** (functional) **goals the software has to realize**.

  For ***example***: "*the word processor shall allow users to search for strings in the text*"; "*the system shall allow users to reserve taxis*".

- **Non-functional requirements (NFRs)**: further characterization of user-visible aspects of the system not directly related to functions.

  For ***example***: "*the response time must be less than 1 second*"; "*the server must be available 24 hours a day*".

- **Constraints requirements**: imposed by the customer or the environment in which the system operates.

  For ***example***: "*the implementation language must be Java*"; "*the credit card payment system must be able to be dynamically invoked by other systems relying on it*".

We make some observations about non-functional requirements. NFRs predicate on **external** non-functional qualities, and these qualities must be **measurable by metrics**. NFRs have some characteristics:

- Constraints on **how functionality must be provided to the end user**.
- The **application domain determines** their **relevance** and their **prioritization**.
- Have a **strong influence on the structure of the system to be built**. For **example**, a system may require 24/7 availability. As a result, it is likely to be designed as a replicated system (with redundant components).

Example 2: are these requirements?

1. "*The user should insert correct information in the enrolment form*".

This is not a requirement! How can the software prevent a user from entering incorrect information? Specifically, is a domain assumption!

2. "*The system should check whether fiscal code are well formed*".

Yes, the software can do this! So it is a requirement.

Example 3: types of requirements

Example of **functional requirements**:

- "*The system shall allow users to reserve taxis*".
- "*The system should never allowe non-registered users to see the list of other users willing to share a taxi*".

- "*The system should guarantee that the reserved taxi picks the user up*".

But attention! There is **unfeasible** (from the perspective of the software to be) **functional requirements**:

- "*The system should guarantee that the reserved taxi picks the user up*".

This is because the software cannot guarantee this feature!
Example of **non-functional requirements**:

- "*The system has to provide a feedback in 5 seconds*".
- "*The system should be available 24/7*".

Example of **technical requirements**:

- "*The system should be implemented in Java*".
- "*The search for the available taxi should be implemented in class* `Controller`".

Example 4: bad requirements

1. "*The system shall process all mouse clicks very fast to ensure users do not have to wait*".

The problem here is that it **cannot be verified (tested)**, because what does "fast" mean? Do we have a metric? Can you quantify it?

2. "*The user must have Adobe Acrobat installed*".

The problem here is that it **cannot be achieved by the software system itself**. It is not something that the system has to do. But it could be expressed as a domain assumption, so it is not a functional requirement for our software.

3.4 Eliciting requirements

The **Requirements Elicitation** is the **practice of researching and discovering the requirements of a system from users, customers, and other stakeholders**. The **goal** of requirements elicitation is to ensure that the software development process is based on a clear and comprehensive understanding of the customer's needs and requirements. To do that, exist a simple and effective tool called **scenario**s.

Definition 3

A **scenario** is a concrete, focused, informal description of a single feature of the system to be.

Example 5: warehouse on fire

Bob driving down main street in his patrol car notices smoke coming out of a warehouse. His partner, Alice, reports the emergency from her car.

Alice enters the address of the building, a brief description of its location (i.e. north west corner), and an emergency level. In addition to a fire unit, she requests several paramedic units on the scene given that area appears to be relatively busy. She confirms her input and waits for an acknowledgment.

John, the Dispatcher, is alerted to the emergency by a beep of his workstation. He reviews the information submitted by Alice and acknowledges the report. He allocates a fire unit and two paramedic units to the incident site and sends their estimated time of arrival (ETA) to Alice.

Alice received the acknowledgment and the ETA.

There are heuristics for finding scenarios, such as asking the customer a few questions:

- Which user groups are supported by the system to perform their work?
- What are the primary tasks that the system needs to perform?
- What data will the actor create, store, change, remove or add in the system?
- What external changes does the system need to know about?
- What changes or events will the actor of the system need to be informed about?

However, it's very important <u>not</u> **to rely on questionnaires alone**! **Insist on task observation** (if possible), ask to **speak to the end user**, not just the software contractor, and expect resistance, but try to overcome it.

Scenarios provide a nice summary of what the requirements analysis team can derive from observation, interviews, analysis of documentation. By generalizing the scenarios, we can get **Use Cases**.

To specify a use case, it's very important to follow the following scheme.

Definition 4: Use Cases Schema

- **Name of Use Case**
- **Actors**
  - *Description of Actors involved in use case.*
- **Entry condition**
  - "*When this use case starts the following condition is true...*".
- **Flow of Events**
  - *Free form, informal natural language.*
- **Exit condition**
  - "*This use case terminates when the following condition holds...*".
- **Exceptions**
  - *Describe what happens if things go wrong.*
- **Special Requirements**
  - *Nonfunctional Requirements, Constraints.*

The following **suggestions** are useful in defining an appropriate use case:

- Use cases named with verbs that indicate what the user is trying to accomplish
- Actors named with nouns
- Use cases steps in active voice
- The causal relationship between steps should be clear
- A use case per user transaction
- Separate description of exceptions
- Keep use cases small (no more than two/three pages)
- The steps accomplished by actors and those accomplished by the system should be clearly distinguished (this helps us in identifying the boundaries of the system)

First of all, we present an example of a **bad use case**.

Example 6: bad use case

Example of a bad use case referring to the ambulance dispatching example on page 17:

- Use case name: Accident
- Participating Actors:
  - Field Officer
- Flow of Events:
  1. The Field Officer reports the accident
  2. An ambulance is dispatched
  3. The Dispatcher is notified when the ambulance arrives on site

The errors are as follows:

- In the *use case name* field, the **word is a noun**. It's better to use a verb that indicates what the user is trying to achieve.
- The Dispatcher actor is **not declared** in the *Participating Actors* field, but is mentioned in the *Flow of Events* field.
- There are two main errors in the *Flow of Events* section: the first is in the sentence "*An ambulance is dispatched*". But **who sends it?** The second is in the third sentence, because **who notifies the Dispatcher?**

Now we present an example of a *well composed* use case.

Example 7: use case `ReportEmergency` with reference to the example on page 22

There are two **actors** involved:

- Field Officer (Bob and Alice in the Scenario)
- Dispatcher (John in the Scenario)

The **Entry Condition** is always true because an emergency can be reported at any time. The **sequence of events** is as follows:

- The **FieldOfficer** activates the Report Emergency function of her terminal.
- **Friend** (the system to be developed) responds by presenting a form to the officer.
- The FieldOfficer fills the form, by selecting the emergency level, type, location, and brief description of the situation. The FieldOf-

ficer also describes possible responses to the emergency situation. Once the form is completed, the FieldOfficer submits the form.

- At which point, the **Dispatcher** is notified.
- The Dispatcher reviews the submitted information and allocates resources by invoking the AllocateResources use case. The Dispatcher selects a response and acknowledges the emergency report.

The **Exit Condition** is the following: the FieldOfficer has received the acknowledgment and the selected response.

There are two possible **exceptions**:

- The FieldOfficer is notified immediately if the connection between her terminal and the control room is lost.
- The Dispatcher is notified immediately if the connection between any logged in FieldOfficer and the control room is lost.

And the **special requirements** are:

- The FieldOfficer's report is acknowledged within 30 seconds;
- The selected response arrives no later than 30 seconds after it is sent by the Dispatcher.

Example 8: use case `AllocateResources` with reference to the example on page 22

- Use case name: AllocateResources
- Participating Actors:
  - Dispatcher (John in the Scenario. The Dispatcher allocates a resources to an Emergency if the resource is available; of course, he also updates and removes Emergency Incidents, Actions, and Requests in the system)
  - Resource Allocator (the Resource Allocator is responsible for allocating resources in case they are scarce)
  - Resources (the Resources that are allocated to the Emergency)
- Entry Condition:
  - An Incident has been opened
- Flow of Events:
  - The Dispatcher selects the types and number of Resources that are needed for the incident.

  - Friend replies with a list of Resources that fulfill the Dispatcher's request.
  - The Dispatcher selects the Resources from the list and allocates them for the incident.
  - Friend automatically notifies the Resources.
  - The Resources send a confirmation.

- Exit Condition:
  - The use case terminates when the resource is committed.
  - The selected Resource is now unavailable to any other Emergences or Resource Requests.

- Exceptions:
  - If the list of Resources provided by Friend is insufficient to fulfill the needs of the emergency, the Dispatcher informs the Resource Allocator.
  - The Resource Allocator analyzes the situation and selects new Resources by decommitting them from their previous work.
  - Friend automatically notifies the Resources and the Dispatcher.
  - The Resources send a confirmation.

4 Software Design

4.1 Software Architecture

Definition 1

The **Software Architecture (SA)** of a system is the **set of structures** needed to reason about the system. These structures comprise software **elements**, **relations** among them, and **properties** of both.

The software architecture is a tool for thinking about systems, and it's made up of a set of structures.

The Architecture is so important because it is the vehicle for communication: internal (different teams) and external (teams and stakeholders). The Architecture manifests the first set of design decisions and is a portable abstraction of a system.

4.2 Architecture and multiple structures

There is a set of structures relevant to the software:

- **Component-and-connector (C&C)** structures. Describe how the system is structured as a **set of elements** that have **runtime behavior** (called components) and interactions (called connectors).
  - The **components** are the principal units of computation (for **example** the clients, servers, services, etc.)
  - The **connectors** represent communication (for **example** request-response mechanisms, pipes, asynchronous messages, etc.)

  The ***purpose*** of these structures is to **enable us to answer questions** such as:

  - *What are the major executing components and how do they interact at runtime?*
  - *What are the major shared data stores?*
  - *Which parts of the system are replicated?*
  - *How does data progress through the system?*
  - *Which parts of the system can run in parallel?*
  - *How does the system's structure evolve during execution?*

  Also, **allow us to study runtime properties** such as availability and performance.

- **Module** structures. Show how a system is structured as **a set of code or data units** that have to be procured or constructed, **together with their relations**. An **example** of modules: packages, classes, functions, libraries, layers, database tables, etc.

  Modules constitute **implementation units** that can be used as the basis for work splitting (identifying functional areas of responsibility). Typical relations among modules are: uses, is-a (generalization), is-part-of.

  The ***purpose*** of these structures is to **allow us to answer questions** such as:

  - *What is the primary functional responsibility assigned to each module?*
  - *What other software elements is a module allowed to use?*
  - *What other software does it actually use and depend on?*
  - *What modules are related to other modules by generalization or specialization (i.e. inheritance) relationships?*

  Can also be used to answer questions about the **impact on the system when the responsibilities assigned to each module change**.

- **Allocation** structures. Define **how the elements** from component-and-connector or module structures **map** onto things that are not software. For **example** hardware (possibly virtualized), file systems, teams. Some typical allocation structures include deployment structure, implementation structure, work assignment structure.

4.3 Software design descriptions and UML

In the following pages we present some diagrams that are fundamental to creating appropriate documentation. The following diagrams show how to create some UML diagrams.

4.3.1 Component Diagram (C&C structure)

A **Component Diagram** breaks down the actual **system** under development into **various high levels of functionality**. Each component is responsible for one clear aim within the entire system and only interacts with other essential elements on a need-to-know basis.

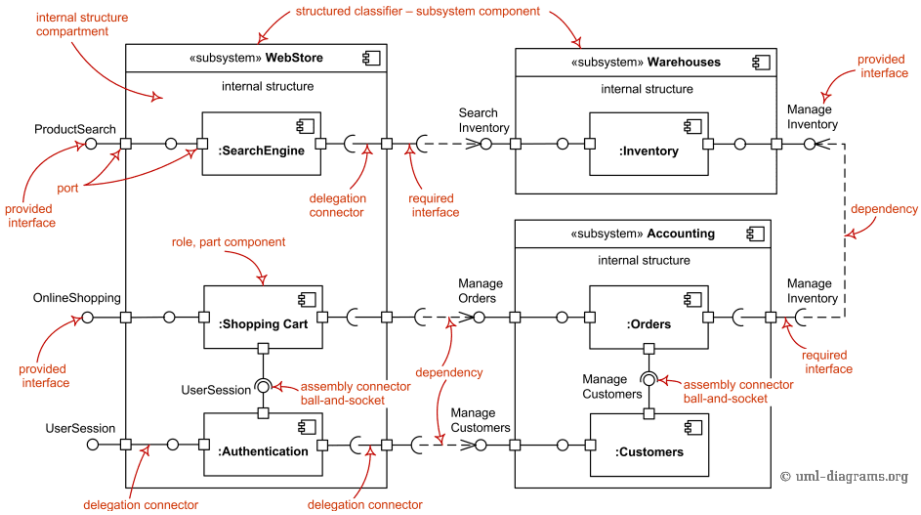

Figure 5: Component Diagram.

To view the component diagram in high resolution, scan (or click) the QR code below.

A complete guide can be found on the following page: What is Component Diagram?

4.3.2 Sequence Diagram (C&C structure)

Sequence Diagram show **elements as they interact over time** and they are organized according to object (horizontally) and time (vertically).

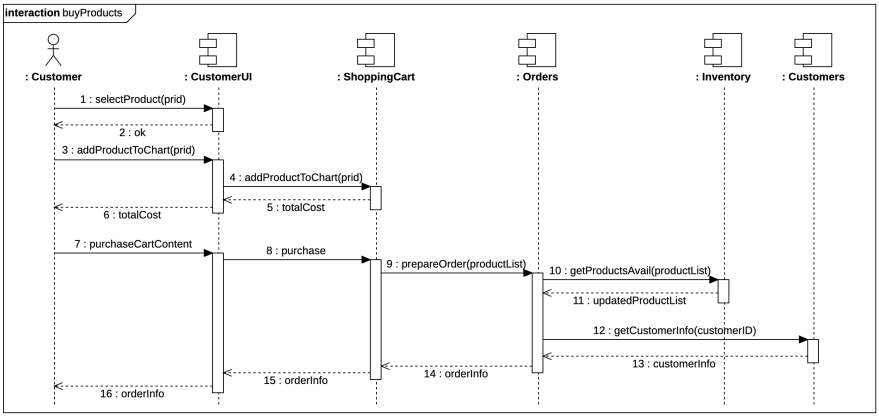

Figure 6: Sequence Diagram.

To view the sequence diagram in high resolution, scan (or click) the QR code below.

A complete guide can be found on the following page: What is Sequence Diagram?

4.3.3 Class Diagram (module structure)

A **Class Diagram** is **a type of static structure diagram** that describes the structure of a system by showing the system's classes, their attributes, operations (or methods), and the relationships among objects.

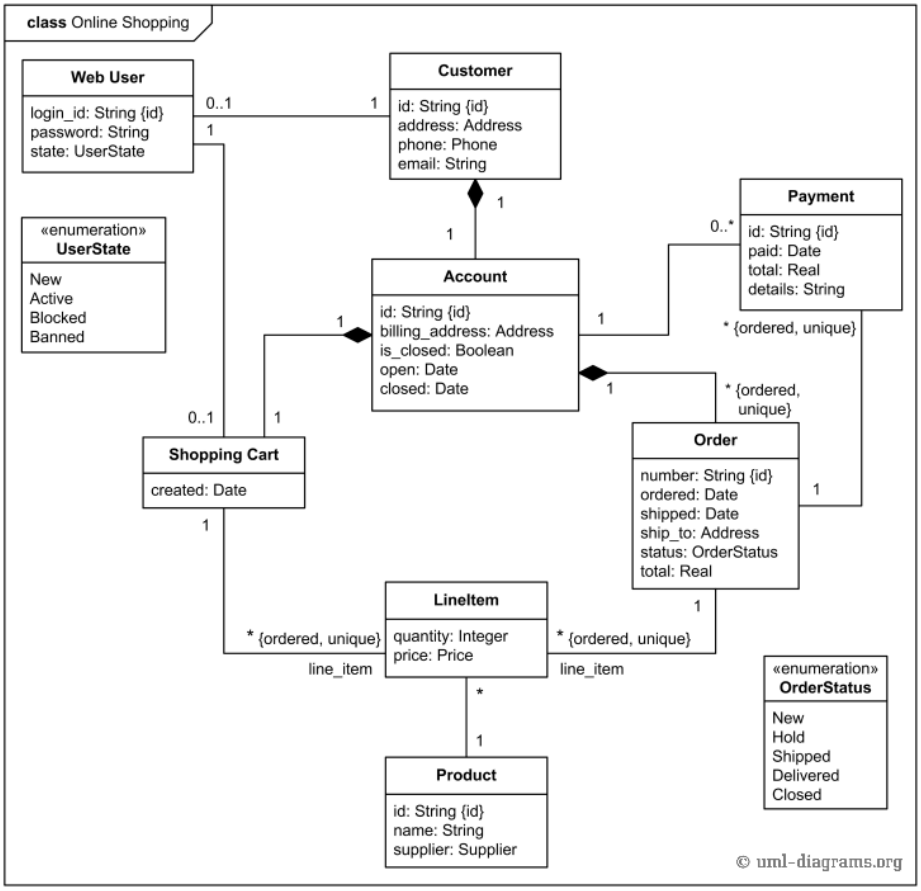

Figure 7: Class Diagram.

To view the sequence diagram in high resolution, scan (or click) the QR code below.

A complete guide can be found on the following page: What is Class Diagram?

4.3.4 Package Diagram (module structure)

A **Package Diagram**, a kind of structural diagram, shows the **arrangement and organization of model elements in middle to large scale project**. Package diagram can show both structure and dependencies between sub-systems or modules, showing different views of a system, for example, as multi-layered (aka multi-tiered) application - multi-layered application model.

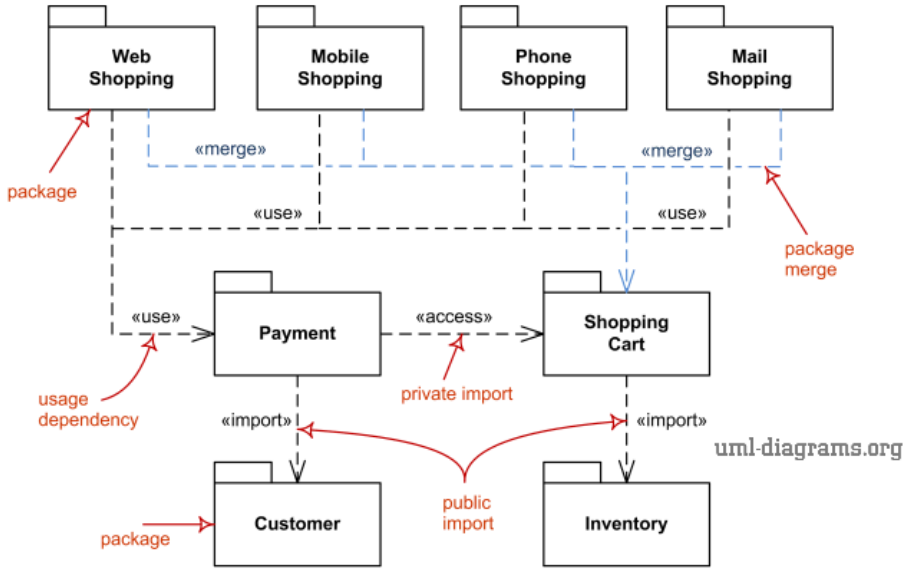

Figure 8: Package Diagram.

To view the sequence diagram in high resolution, scan (or click) the QR code below.

A complete guide can be found on the following page: What is Package Diagram?

4.3.5 Deployment Diagram (allocation structure)

A **Deployment Diagram** is a diagram that shows the **configuration of run time processing nodes and the components that live on them**. Deployment diagrams is a kind of structure diagram used in modeling the physical aspects of an object-oriented system. They are often be used to model the static deployment view of a system (topology of the hardware).

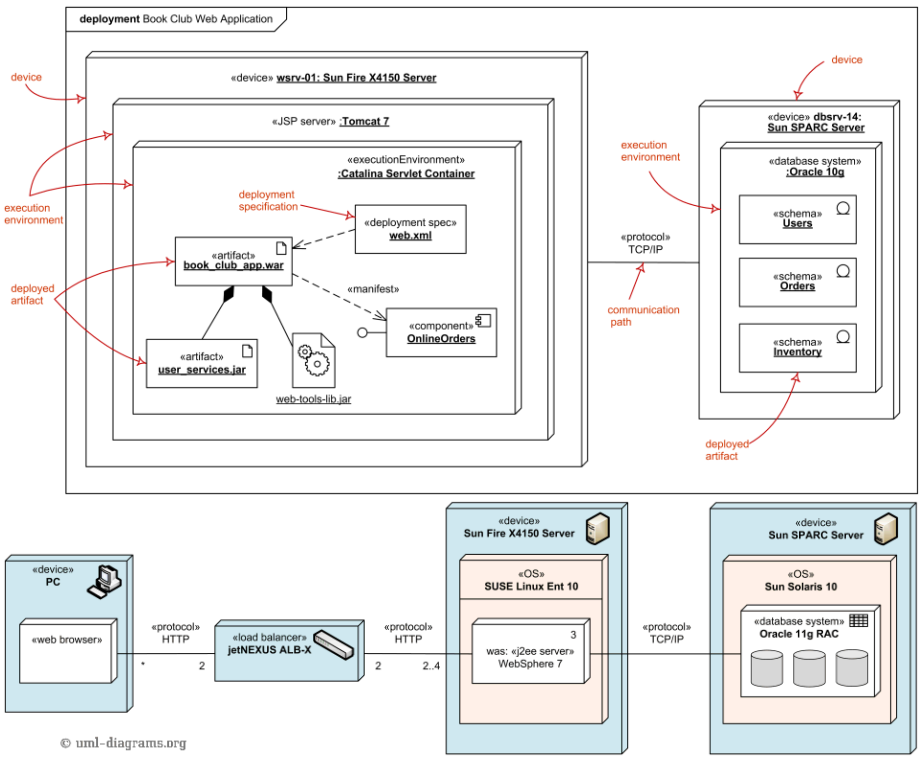

Figure 9: Deployment Diagram.

To view the sequence diagram in high resolution, scan (or click) the QR code below.

A complete guide can be found on the following page: What is Deployment Diagram?

4.4 Design principles

The following is a list of important design principles in software engineering.

Definition 2

1. **Divide et impera** (also called *divide and conquer*)
2. **Keep the level of abstraction as high as possible**
3. **Increase cohesion where possible**
4. **Reduce coupling where possible**
5. **Design for reusability**
6. **Reuse existing designs and code**
7. **Design for flexibility**
8. **Anticipate obsolescence**
9. **Design for portability**
10. **Design for testability**
11. **Design defensively**

1. Divide et impera (*divide and conquer*)

Divide and Conquer is a **problem-solving strategy** that involves **breaking down a complex problem into smaller**, more manageable **parts**, solving each part individually, and then combining the solutions to solve the original problem.

2. Keep the level of abstraction as high as possible

Ensure that your designs allow you to **hide or defer consideration of details, thus reducing complexity**. A good abstraction is said to provide ***information hiding***. Abstractions allow you to understand the essence of a subsystem without having to know unnecessary details.

3. Increase cohesion where possible

In general, a file, module, class or whatever should contain the same logical methods. For example, in the following class we have two functions with two different purposes (error!).

```
Class Utility {
    ComputeAverageScore(Student s[])
    ReduceImage(Image i)
}
```

4. Reduce coupling where possible

Coupling is the **degree of interdependence between software modules**; a measure of how closely connected two routines or modules are; the strength of the relationships between modules. There are different **types of couplings**:

- **Content coupling** is said to occur when **one module uses the code of another module**, for instance a branch. This violates *information hiding* (2nd design principle).
- **Communication coupling** is said to occur when one **module sends too many messages to another module**. The creation of a message can be optimized and the number of messages sent between these two modules can be reduced.
- **Control coupling** is one **module controlling the flow of another**, by passing it information on what to do. For **example**, passing a what-to-do flag or the following code:

```
class b {
    func(flag f) {
        if(f == flag1) do this
        else if(f == flag2) do that
        else...
    }
}
```

Other types can be viewed here.

5. Design for reusability

Design the various aspects of your system so that they can be **used again in other contexts**. To do this, you need to follow these rules:

- Generalize your design as much as possible;
- Simplify your design as much as possible;
- Follow the preceding all other design principles;
- Design your system to be extensible.

6. Reuse existing designs and code

Design with reuse is complementary to design for reusability. Take advantage of the investment you or others have made in reusable components. Note: cloning should not be seen as a form of reuse.

7. Design for flexibility

Actively **anticipate changes that a design may have to undergo in the future**, and prepare for them. To do this, you need to follow these rules:

- Reduce coupling and increase cohesion;
- Create abstractions;
- Use reusable code and make code reusable;
- Do not hard-code anything.

8. Anticipate obsolescence

Plan for changes in the technology or environment so the software will continue to run or can be easily changed. So do not rush using early releases of technology. If possible:

- Avoid using software libraries that are specific to particular environments;
- Avoid using undocumented features or little-used features of software libraries;
- Avoid using software or special hardware from companies that are less likely to provide long-term support;
- Use standard languages and technologies that are supported by multiple vendors.

9. Design for portability

Have the **software run on as many platforms as possible**. Avoid, if possible, the use of facilities that are specific to one particular environment (e.g. a library only available in Microsoft Windows).

10. Design for testability

Take steps to **make testing easier**. Design a program to automatically test the software:

- Ensure that all the functionality of the code can be driven by an external program, bypassing a graphical user interface;
- Create proper code to exercise the other methods/functions;
- Use unit test automation frameworks.

11. Design defensively

Be careful when you trust how others will try to use a component you are designing. Handle all cases where other code might attempt to use your component inappropriately. Check that all of the inputs to your component are valid: the preconditions. Unfortunately, over-zealous defensive design can result in unnecessarily repetitive checking.

5 Architectural styles

5.1 Definition

Definition 1

An architectural style determines the **vocabulary** of **components** and **connectors** that can be used in instances of that style, together with a set of **constraints** on how they can be combined.

These can include topological constraints on architectural descriptions (e.g., no cycles). Other constraints - say, having to do with execution semantics - might also be part of the style definition.

5.2 Client-Server

A **Client-Server Architecture** is a **network-based computing structure** where responsibilities and operations get **distributed between clients and servers**. Client-Server Architecture is widely used for network applications such as email, web, online banking, e-commerce, etc.

✔ When to use it

The three most common cases are:

- When **multiple users** need to access a **single resource** (e.g. database).
- When there is a preexisting software and we must **access remotely** (e.g. email server).
- When it is convenient to organize the system around a **shared piece of functionality used by multiple components** (e.g. authentication or authorization server).

⚠ Technical issues

With this architecture, it's necessary to **design** and **document** proper **interfaces** for our server. It is also necessary to ensure that the server can **handle multiple simultaneous requests**.

5.2.1 Interface design

An **interface design** is a **boundary** across which components interact. Proper definition of interfaces is an architectural concern (affects maintainability, usability, testability, performance, integrability). There are two important **guiding principles** for interface design: **information hiding** and **low coupling**. An interface should encapsulate a component implementation so that it can be changed without affecting other components.

There are several aspects to interface design that need to be considered:

- **Contract principle**: any resource (operation, data) added to an interface implies a **commitment to maintaining** it.
- **Least surprise principle**: interfaces should **behave** consistently **with expectations**.
- **Small interfaces principle**: interfaces should limit the **exposed resources to the minimum**.

There are also some important elements to define: **interaction style** (e.g. sockets, RPC, REST); **representation** and structure of exchanged data (affecting expressiveness, interoperability, performance and transparency); **error handling**.

5.2.2 Error handling, multiple interfaces and interface evolution

Sometimes there may be some problems, for example: an operation is called with invalid parameters and consequently the call doesn't return anything. This simple example can provoke some scenarios: the component cannot handle the request in its current state; or hardware/software errors prevent successful execution; or there is a misconfiguration issue (e.g. the server is not correctly connected to the database).

There are three possible **solutions**: **raising an exception**; **return an error code** (common); **log the problem**. There's no single solution, but we can choose several (e.g. error code and log the problem).

A **server** can offer **multiple interfaces** at the same time. This enables separation of concerns, different levels of access rights and support ot **interface evolution**.

Interface evolution occurs for many reasons (e.g. to support new requirements). Several **strategies** are needed to support continuity:

- **Deprecation**: declare well in advance that an interface version will be retired by a certain date;
- **Versioning**: maintain multiple active versions of the interface;
- **Extension**: a new version extends the previous one.

5.2.3 Handling multiple requests

The server must be able to receive and process requests from multiple clients. There are two main approaches to this: *forking* and *worker pooling*.

Forking

The **forking** approach is the same as that used by the Apache Web Server: **one process per request or per client**.

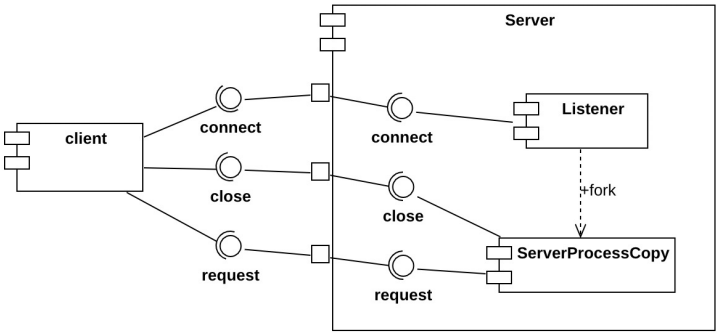

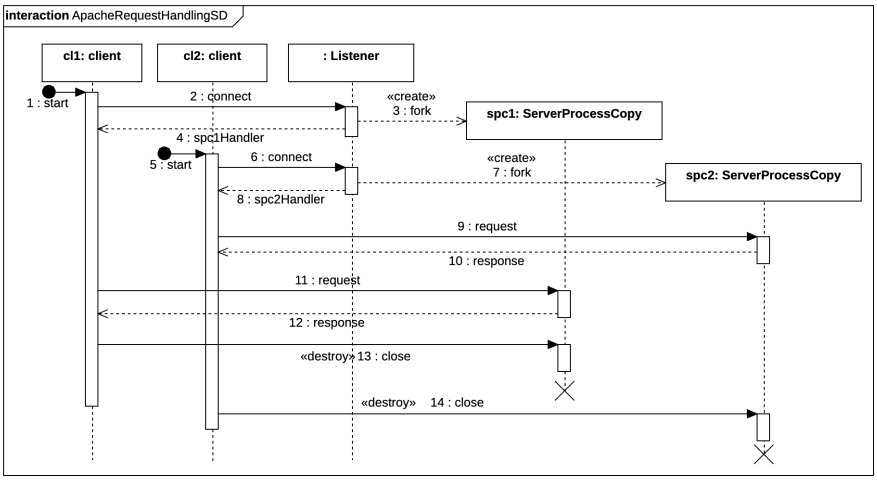

Figure 10: Forking diagrams.

✔ Forking Advantages

- Architectural **simplicity**.
- **Isolation** and **protection** given by the one-connection-per-process model. Note: slow processes do not affect other incoming connections.
- **Simple to program**.

Forking Issues

- Growth of the WWW over the last 20 years (number of users and weight of web pages).
- The number of **active processes** at time t is **difficult to predict** and may **saturate resources**.
- **Expensive** fork-kill operations for each **incoming connection**.

Worker pooling

It is an alternative approach adopted by NGINX Web Server. It is **designed for high concurrency** but has to deal with **scalability issues**.

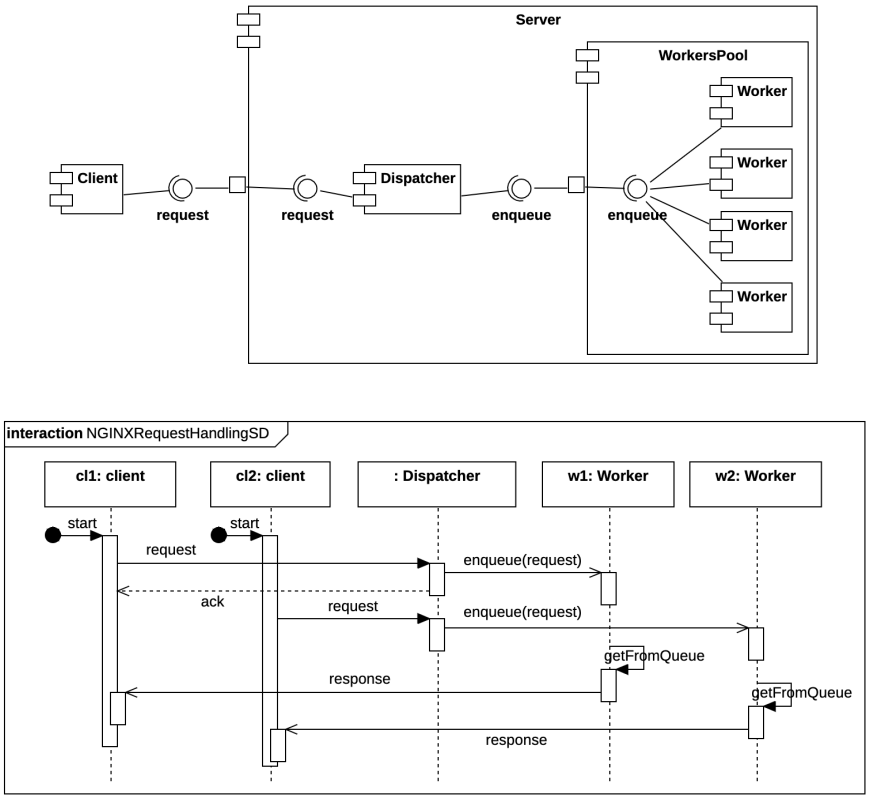

Figure 11: Worker pooling diagrams.

Despite the well-known problem of this architecture (scalability), NGINX addresses the previous problems by introducing a new **architectural tactic**. A *tactic* is a **design decision that affects the control of one or more quality attributes**.

✔ Worker Pooling Advantages (quality attribute trade-offs)

- Number of **workers** is fixed, so they **do not saturate available resources**.
- **Each worker** has a **queue**.
- When **queues** are **full** the **dispatcher drops the incoming requests** to keep high performance (**optimize scalability and performance by sacrificing availability**).
- Dispatcher **balances** the **workload** among available workers **according to specific policies**.

5.3 Three-Tier Architecture

The following is a summary of the IBM guide.

Three-tier architecture is a well-established software application architecture that **organizes applications into three logical and physical computing tiers**:

- The **presentation** tier, or user interface;
- The **application** tier, where data is processed;
- The **data** tier, where application data is stored and managed.

✔ **Benefits**

The chief benefit of three-tier architecture is its **logical and physical separation** of functionality. Each tier can run on a separate operating system and server platform - for example, web server, application server, database server - that best fits its functional requirements. And each tier runs on at least one dedicated server hardware or virtual server, so the services of **each tier can be customized and optimized without impacting the other tiers**. Other benefits include:

- **Faster development**: Because *each tier can be developed simultaneously by different teams*, an organization can bring the application to market faster. And programmers can use the latest and best languages and tools for each tier.
- **Improved scalability**: *Any tier can be scaled independently* of the others as needed.
- **Improved reliability**: An outage in one tier is less likely to impact the availability or performance of the other tiers.
- **Improved security**: Because the *presentation tier and data tier can't communicate directly*, a well-designed application tier can function as an internal firewall, preventing SQL injections and other malicious exploits.

5.3.1 N-tier architecture

N-tier architecture (also called or multitier architecture) refers to any application architecture with **more than one tier**. But applications with more than three layers are rare because extra layers offer **few benefits** and can make the **application slower**, **harder to manage** and **more expensive to run**. As a result, n-tier architecture and multitier architecture are usually synonyms for three-tier architecture.

5.4 Microservice architectural style

The microservice architectural style is an approach to developing a single application as a suite of **small services**, each running in its own process and communicating **lightweight mechanisms**, often an HTTP resource API.

✔ Benefits

There are two main benefits:

- **Technology heterogeneity**. **Each service uses its own technology stack**. The technology stack can be selected to fit the task best (e.g. data analysis vs video streaming). The teams can experiment with new technologies within a single microservice (e.g. we can deploy two versions and do A/B testing). Also, no unnecessary dependencies or libraries for each service.
- **Scaling**. **Each microservice can be scaled independently**. Also, identified bottlenecks can be addressed directly. Parts of the system that do not represent bottlenecks can remain simple and unscaled.

5.5 Event-Driven Architecture

An **Event-Driven Architecture** uses **events to trigger and communicate between decoupled services** and is common in modern applications built with microservices. An event is a change in state, or an update, like an item being placed in a shopping cart on an e-commerce website. Events can either carry the state (the item purchased, its price, and a delivery address) or events can be identifiers (a notification that an order was shipped).

Often it's called **publish-subscribe** (publish is the event generation, and subscribe is the declaration of the interest).

✔ Benefits

- **Very common in modern development practices** (e.g. continuous integration and deployment, such as GitHub Actions).
- **Easy addition/deletion of components** (publishers and subscribers are decoupled; the event dispatcher handles this dynamic set).

⚠ Problems

- **Potential scalability problems** (the event dispatcher may become a bottleneck under high workload).
- **Ordering of events** (not guaranteed, not straightforward).

Other characteristics of this architecture:

- THe messages and the events are **asynchronous**.
- Computation is **reactive** (driven by receipt of message).
- **Destination** of messages **determined by receiver**, not sender (location/identity abstraction).
- **Loose coupling** (senders and receivers added without reconfiguration).
- **Flexible** communication means (one-to-many, many-to-one, many-to-many).

Some **examples** of relevant technologies are: Apache Kafka and RabbitMQ.

5.5.1 Apache Kafka

Kafka is a **framework** for the event-driven paradigm:

- Includes primitives to create **event produces** and **consumers** and a runtime infrastructure to handle **event transfer** from producers to consumers.
- **Stores events** durably and reliably.
- Allow consumers to **process events** as they occur or retrospectively.

These services are offered in a distributed, highly scalable, elastic, fault-tolerant, and secure manner.

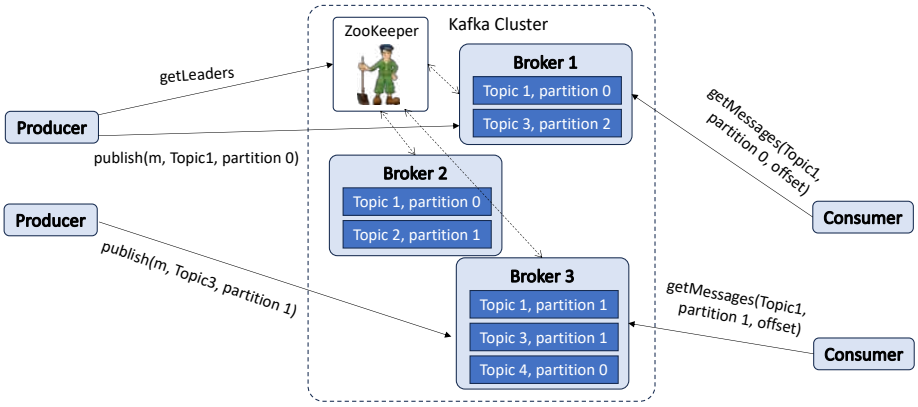

Figure 12: Kafka architecture (the ZooKeeper is a "health manager").

Some important features:

- Each **broker** handles a set of **topics** and **topic partitions**, parts including sets of messages on the topic.
- The *partitions* are independent from each other and can be **replicated** on multiple brokers for fault tolerance.
- There is **one leading broker per partition**. The other brokers containing the same partition are **followers**.
- The **producers** know the available leading brokers and send messages to them.
- **Messages in the same topic** are organized in **batches** at the producers' side and then sent to the broker when the batch size overcomes a certain threshold.
- **Consumers** adopt a **pull approach**. They *receive in a single batch all messages* belonging to a certain partition starting from a specified offset.
- **Messages** remain **available** at the brokers' side **for a specified period** and can be **read multiple times** in this period.

- The leader keeps track of the **in-synch followers**.
- **ZooKeeper is used to monitor the correct operation of the cluster**. All brokers send heartbeats to ZooKeeper. ZooKeeper will replace a failed broker by electing a new leader for all partitions that the failed broker was leading. It can also start/restart brokers.

Message delivery

Producer

1. Brokers commit messages by storing them in the corresponding partition;
2. Leader adds the message to followers (replicas) if available.

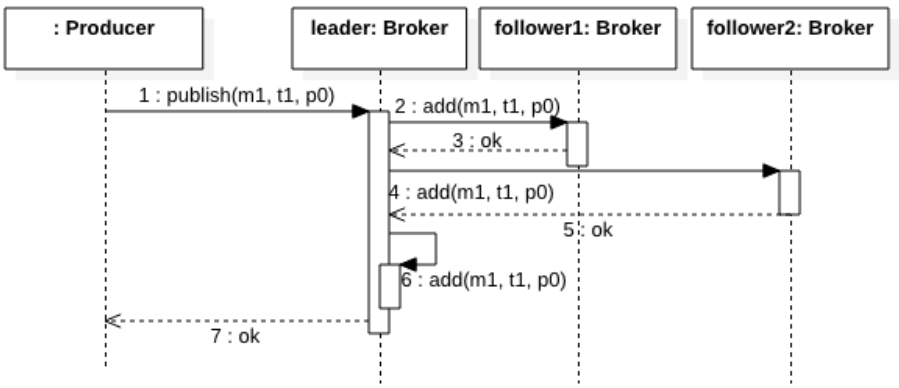

Figure 13: Sequence diagram Kafka producer.

A possible **issue**: in case of failure, the **producer may not get the response** (message number 7 in figure). In this case, the producer has to resend the message and kafka brokers can identify and eliminate duplicates.

Synchronization with replicas can be transactional and it's possible to choose between the following options:

- **Exactly-once** semantics is possible but long waiting time. So **replicas are not allowed**, but the problem is that Kafka spent a **long time trying to guarantee uniqueness**.
- **At-least-once** can be chosen by excluding duplicates' management.
- **At-most-once** can be chosen by publishing messages asynchronously.

Consumer

Each **consumer** can rely on a **persistent log** to keep track of the **offset** so that it is not lost in case of failure.

Issue case: if the consumer fails after having elaborated messages and before storing the new offset in the log, the same messages will be retrieved again (**at-least-once semantics**). Note that the delivery semantics can be changed if

the new offset is store before the elaboration and we can choose **at-most-once semantics** because, if failing after storing the offset, the effect of the received messages does not materialize. Finally, transactional management of the log also allows for **exactly-once semantics**.

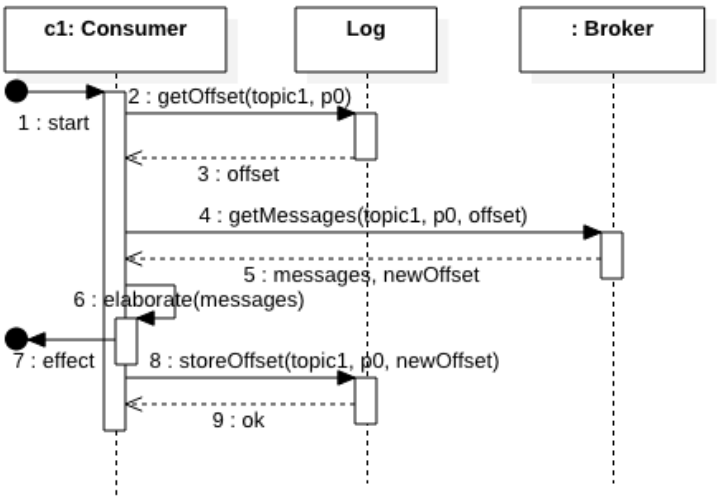

Figure 14: Sequence diagram Kafka consumer.

Kafka architectural tactics

There are some tactics used to improve some features of Kafka. In the following section we can see scalability and fault tolerance.

Improve Scalability

By **creating multiple partitions and multiple brokers**, we can create the ability to distribute producers/consumers to different partitions handled by different brokers. We can also **scale the operations** because Kafka supports the **creation of clusters of brokers**. Consider that each cluster contains up to a hundred brokers capable of handling trillions of messages per day.

Improve Fault Tolerance

By **creating partitions**, we use the **persistence** of the partitions. **Replication** also reduces the risk of data loss. Finally, cluster management takes care of restarting brokers and setting leaders as needed.

5.6 Data-Intensive applications

Before we introduce the architectural styles for data-intensive applications, we explain the difference between batch and stream processing.

Batch processing is a method of running software programs called jobs in batches automatically. While users are required to submit the jobs, no other interaction by the user is required to process the batch.

Stream processing (also known as event stream processing, data stream processing, or distributed stream processing) is a programming paradigm which views streams, or sequences of events in time, as the central input and output objects of computation.

Batch	**Stream**
Has access to all data.	Computes a function of one data element, or a smallish window of recent data.
Might compute something big and complex.	Computes something relatively simple.
Is generally more concerned with throughput than latency of individual components of the computation.	Needs to complete each computation in near-real-time - probably seconds at most.
Has latency measured in minutes or more.	Computations are generally independent.
	Asynchronous - source of data doesn't interact with the stream processing directly, like by waiting for an answer.

Table 1: Batch vs Stream processing.

5.6.1 Batch approach: MapReduce

MapReduce is a **programming architecture** and an associated implementation for processing and generating big data sets with a parallel, distributed algorithm on a cluster.

A MapReduce is composed of a **map procedure**, which performs filtering and sorting (such as sorting students by first name into queues, one queue for each name), and a **reduce method**, which performs a summary operation (such as counting the number of students in each queue, yielding name frequencies). The "MapReduce System" (also called "infrastructure" or "framework") orchestrates the processing by marshalling the distributed servers, running the various tasks in parallel, managing all communications and data transfers between the various parts of the system, and providing for redundancy and fault tolerance.

Example 1: an example of a batch approach using MapReduce

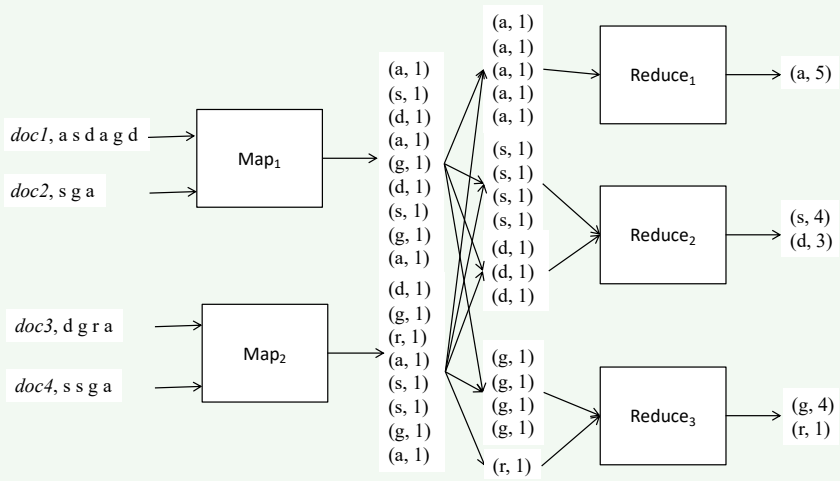

The workflow is the following:

1. Read a set of input files and break it into records;
2. Call the `map` function. It extracts a key and a value from each record (the assigned value is application-dependent);
3. Sort all the key-value pairs by key;
4. Call the reduce function. It iterates over the ordered sets of key-value pairs and combines the values (the combination logic is application-dependent)

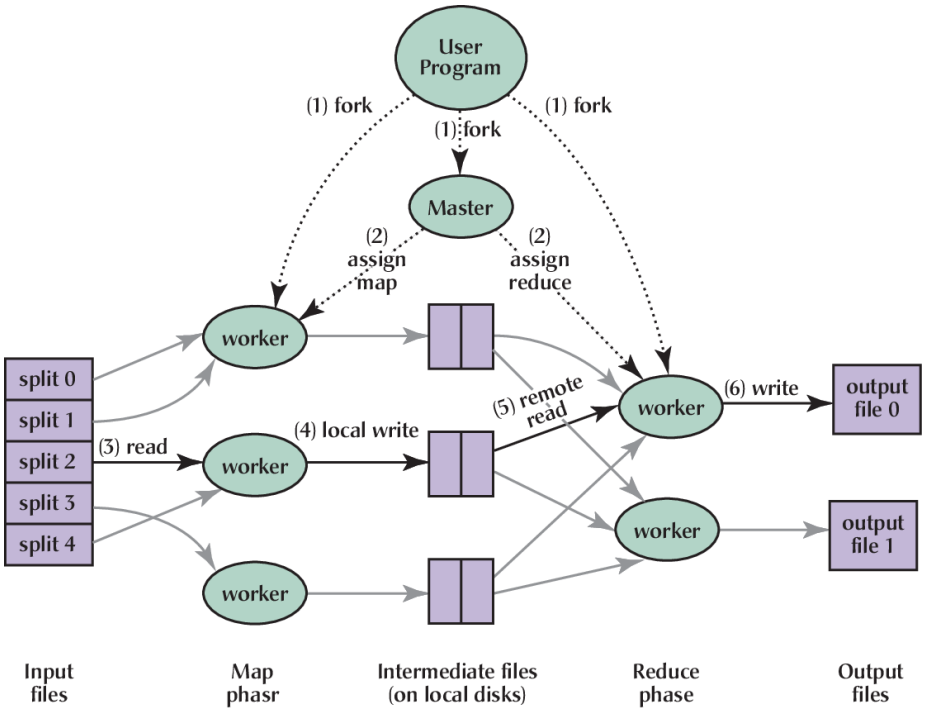

Figure 15: MapReduce architecture.

✔ Advantages

- Works well on commodity hardware.[1]

⚠ Disadvantages

- Implementing a complex processing job is not simple (high level programming model have been built on top of it);
- Reducers have to wait until the preceding Mappers have concluded their job;
- Materialization of intermediate states can be overkilling;
- Sometimes it is not necessary to sort the results of mappers;
- New batch computation approaches supported by frameworks as Spark, Tez, Flink, etc.

[1] Commodity hardware in computing is computers or components that are readily available, inexpensive and easily interchangeable with other commodity hardware. Almost all PCs use commodity hardware.

5.6.2 Stream approach: Apache Storm

Apache Storm is a **distributed stream processing computation framework** written predominantly in the Clojure programming language. Originally created by Nathan Marz and team at BackType, the project was open sourced after being acquired by Twitter. It uses custom created "spouts" and "bolts" to define information sources and manipulations to allow batch, distributed processing of streaming data.

Some features:

- Support stream processing.
- More than 1 million messages per second per node.
- Can scale up to thousands of nodes per cluster.
- Expects and manages failures (fully fault tolerant).
- Provides guaranteed message delivery with exactly once semantics (reliable).

A Storm application is designed as a "topology" in the shape of a **directed acyclic graph** (DAG) with **spouts** (source of streams) and **bolts** (receives messages) acting as the graph vertices. **Edges on the graph are named streams** and direct data from one node to another. Together, the topology acts as a data transformation pipeline. At a superficial level the general topology structure is similar to a MapReduce job, with the main difference being that data is processed in real time as opposed to in individual batches. Additionally, Storm topologies run indefinitely until killed, while a MapReduce job DAG must eventually end.

Stream Grouping	Description
Shuffle	Sends messages to bolts in random, round robin sequence. Use for atomic operations, such as math.
Fields	Sends messages to a bolt based on one or more fields in the tuple. Used to segment an incoming stream and to count tuples of a specified type with a specified value.
All	Sends a single copy of each message to all instances of a receiving bolt. Use to send a signal, such as clear cache or refresh state, to all bolts.
Custom	Customized processing sequence. Use to get maximum flexibility of topology processing based on factors such as data types, load, and seasonality.
Direct	Source decides which bolt receives a message.
Global	Sends messages generated by all instances of a source to a single target instance. Use for global counting operations.

Example 2: example of topology with different groupings

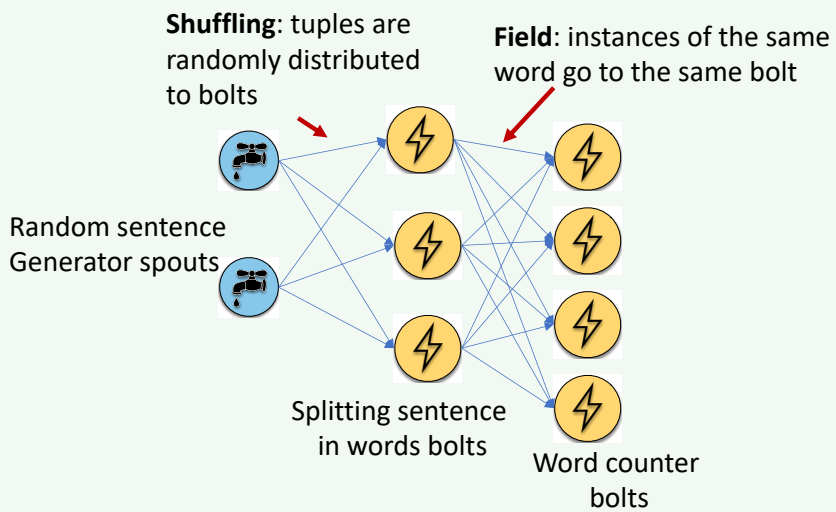

References

[1] F. Bomarius, M. Oivo, P. Jaring, and P. Abrahamsson. *Product-Focused Software Process Improvement: 10th International Conference, PROFES 2009, Oulu, Finland, June 15-17, 2009, Proceedings*. Lecture Notes in Business Information Processing. Springer Berlin Heidelberg, 2009.

Index