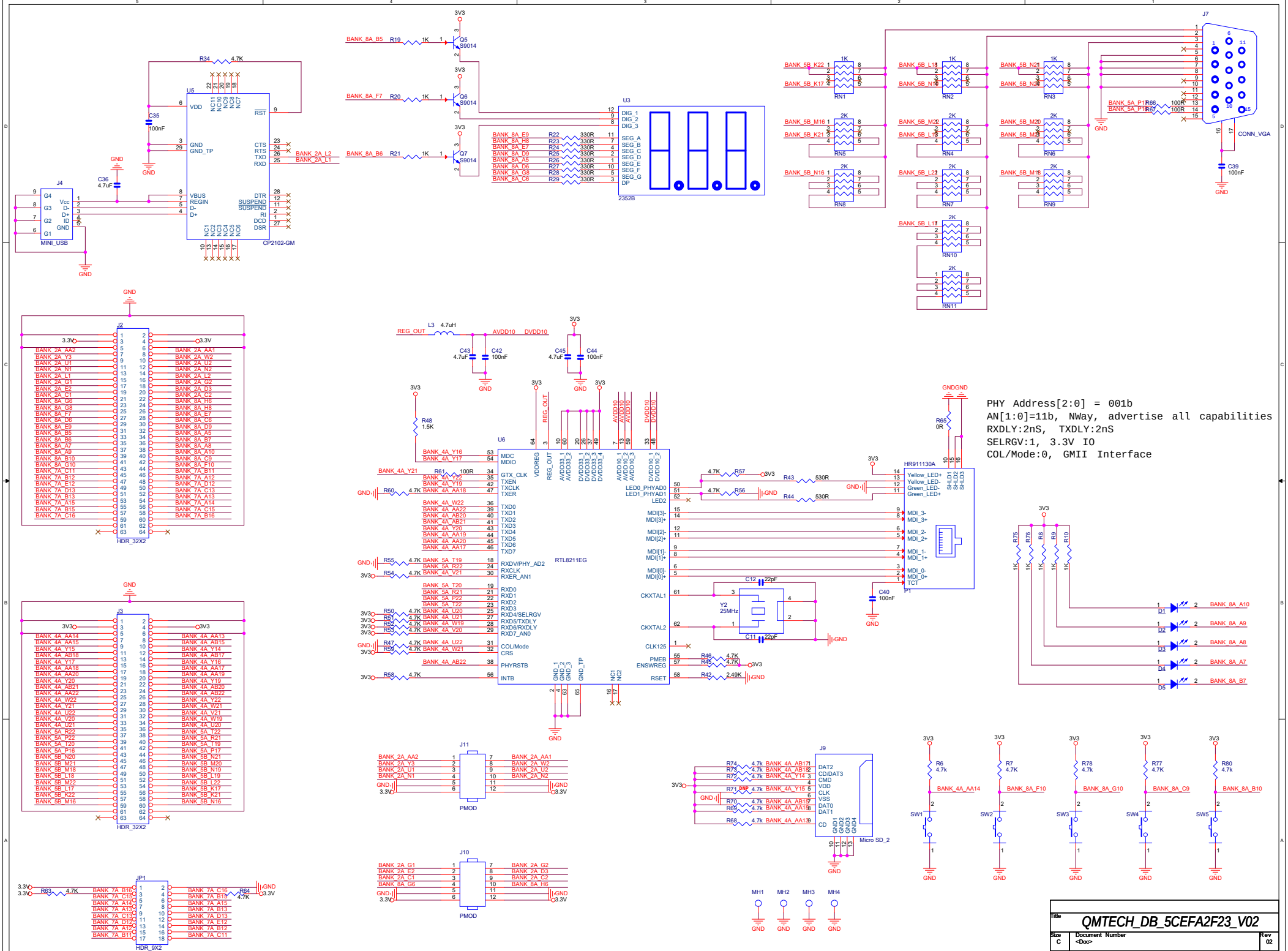
PHY Address[2:0] = 001b
AN[1:0]=11b, NWay, advertise all capabilities
RXDLY:2nS, TXDLY:2nS
SELRGV:1, 3.3V IO
COL/Mode:0, GMII Interface
U5
CP2102-GM
U3
2352B
J7
CONN_VGA
J4
MINI_USB
J2
HDR_32X2
J3
HDR_32X2
JP1
HDR_9X2
U6
RTL8211EG
HR911130A
P1
J11
PMOD
J10
PMOD
J9
Micro SD_2
MH1
MH2
MH3
MH4
Title
QMTECH_DB_5CEFA2F23_V02
Size
C
Document Number
<Doc>
Rev
02
Date:
Thursday, December 27, 2018
Sheet
1
of
1