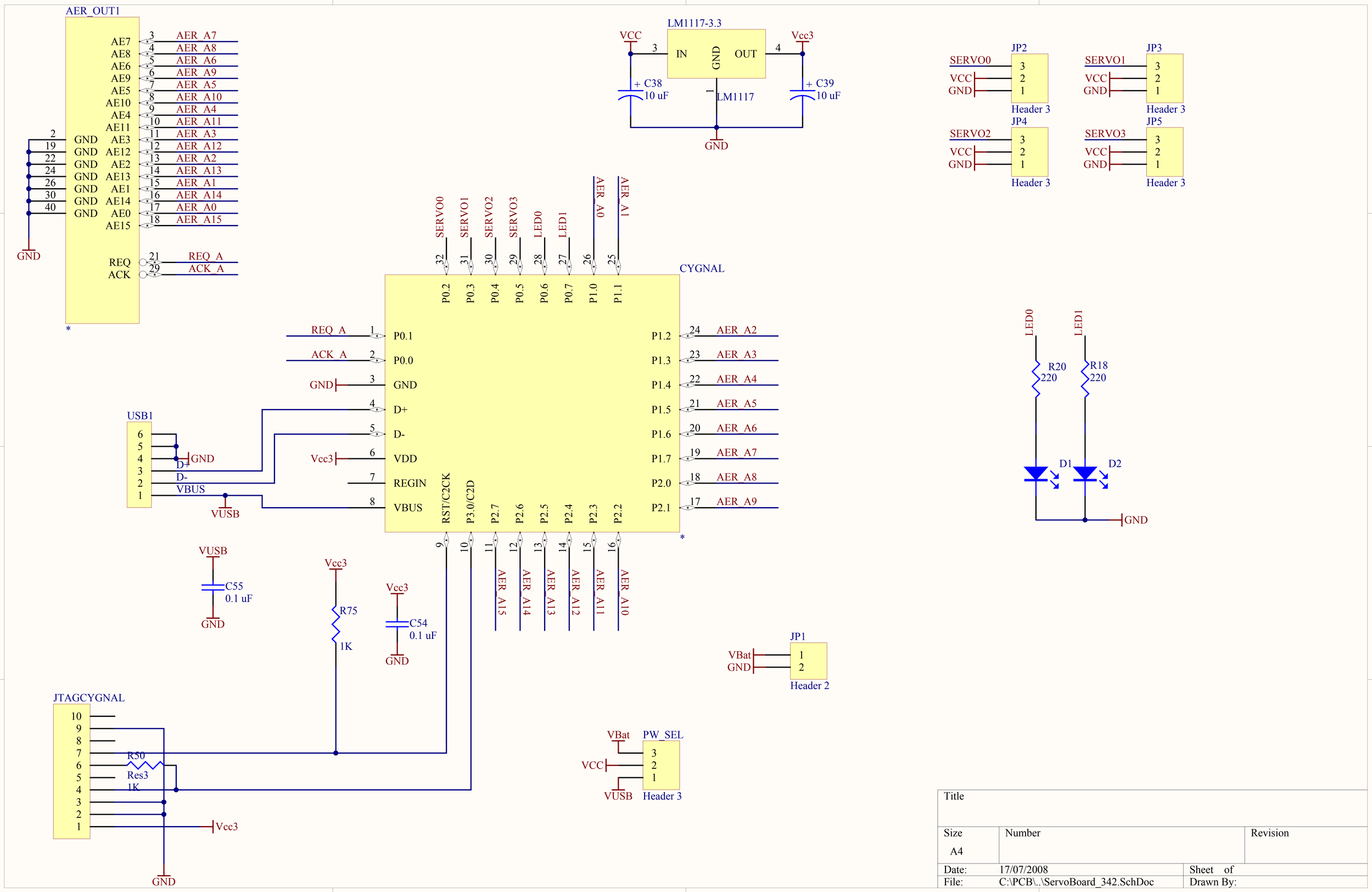

Title		
Size A4	Number	Revision
Date: 17/07/2008		Sheet of
File: C:\PCB\..\ServoBoard_342.SchDoc		Drawn By:

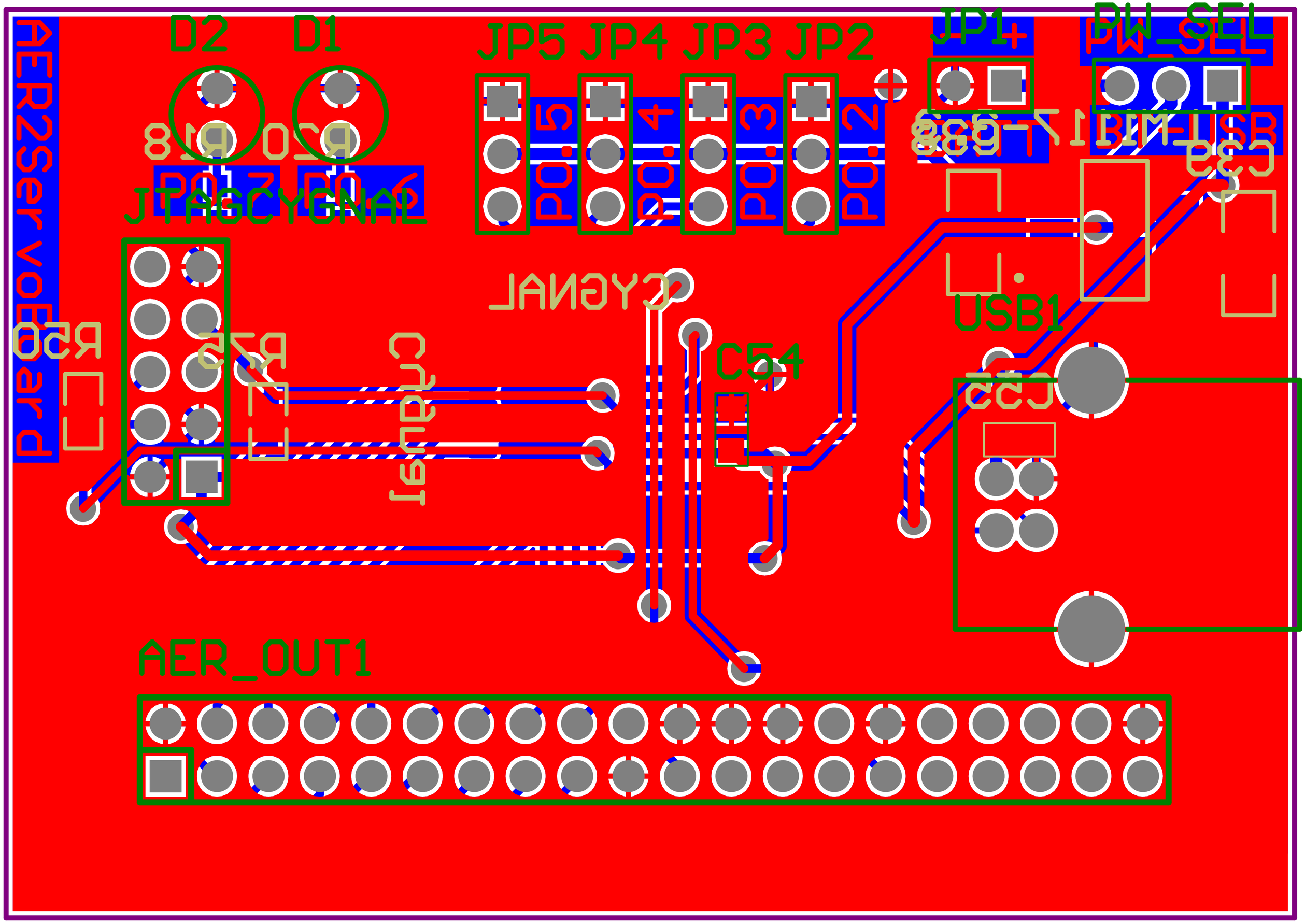
AER2Server board
D2
D1
JP5 JP4 JP3 JP2
JP1
PW_SEL
PO5
PO4
PO3
PO2
PO7
PO6
JTAGCYGNAL
USB1
C54
C53
C52
R29
R28
R27
AER_OUT1