POLITECNICO MILANO 1863 | DIPARTIMENTO DI MECCANICA

LAB – INNOVATIVE APPLICATIONS OF INDUSTRIAL ROBOTICS

A.Y. 2024/2025

19.06.2025 Alessandro Gorla, Alice Di Domenico, Andrea Galenda, Daniele Firmani

Contents

01 Support

02 End-effector

03 Robot programming

04 Status inspection

05 Experimental Results

Support

01

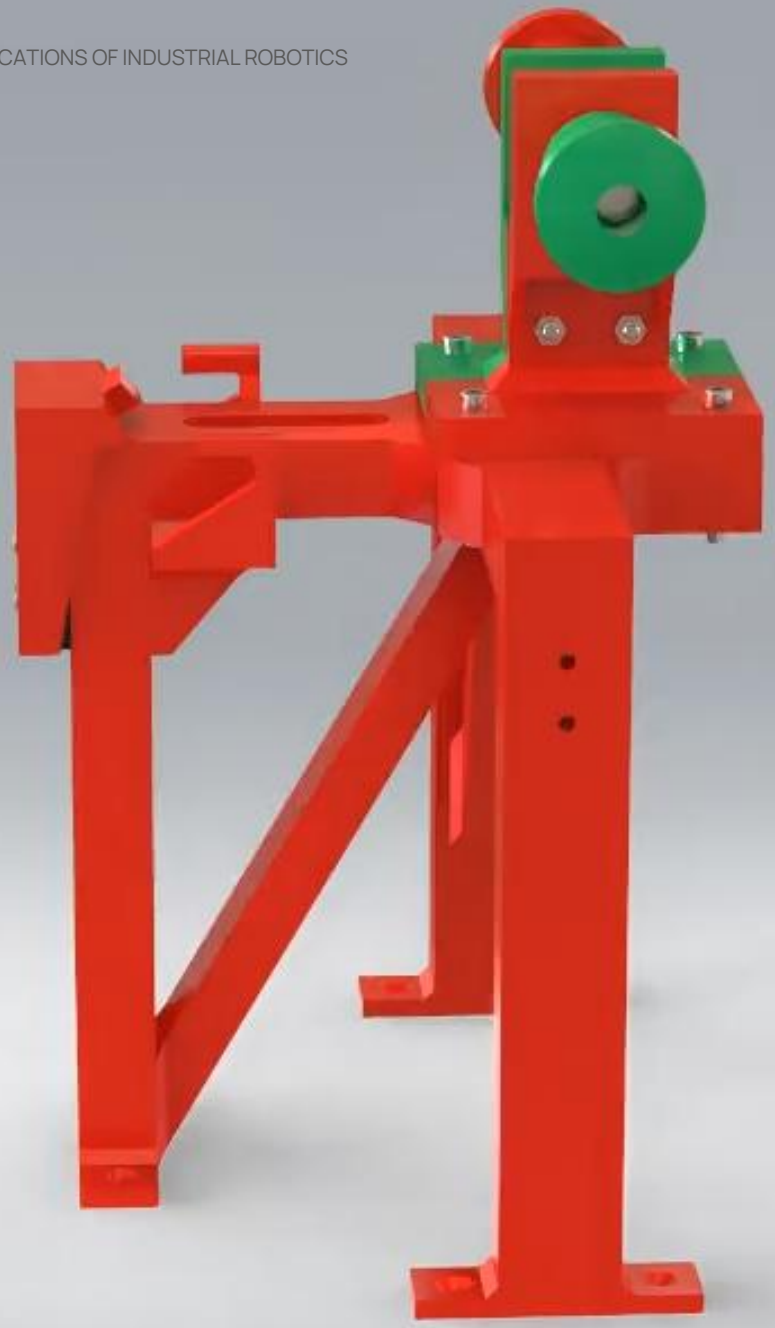

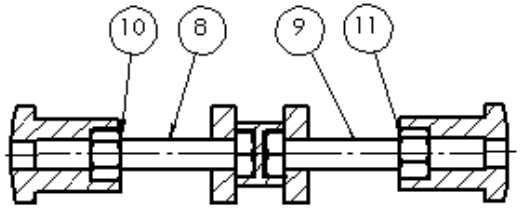

A-A

Num. articolo	Num. parte	Quantità
1	Base	1
2	Screw support	2
3	Pad	2
4	Hexagon	1
5	Back support	1
6	XXXL spacer	1
7	Back locking piece	1
8	ISO 4015 - M12 x 60	2
9	ISO 4015 - M12 x 60 LH	1
10	ISO 4034 - M12	2
11	ISO 4034 - M12 LH	1
12	ISO 4036 - M4	8
13	ISO 4762 - M4 x 35	6
14	ISO 4762 - M4 x 35	2

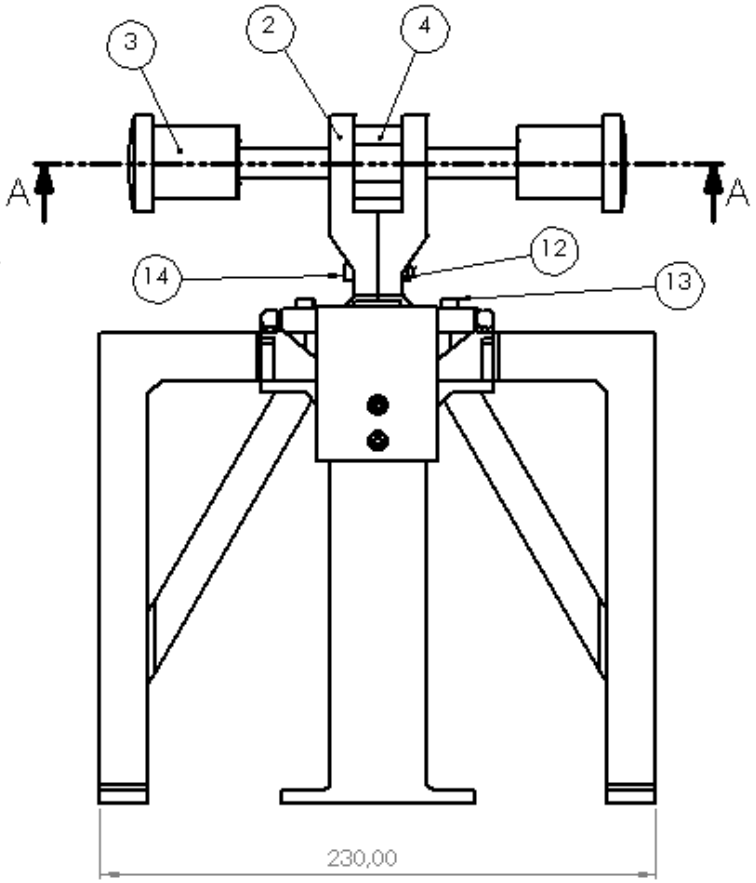

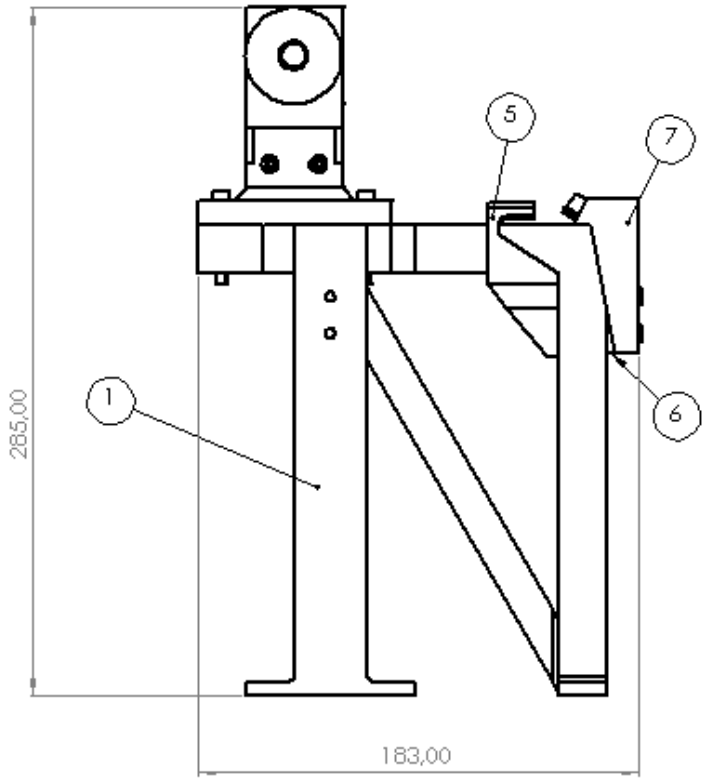

Size of the support (mm): 230x285x183

Locking strategy

1. **Locking on the back**
   - Blocks the longitudinal translation
   - Consists in 2 3D printed parts that are linked to the base thought a couple of bolts M4

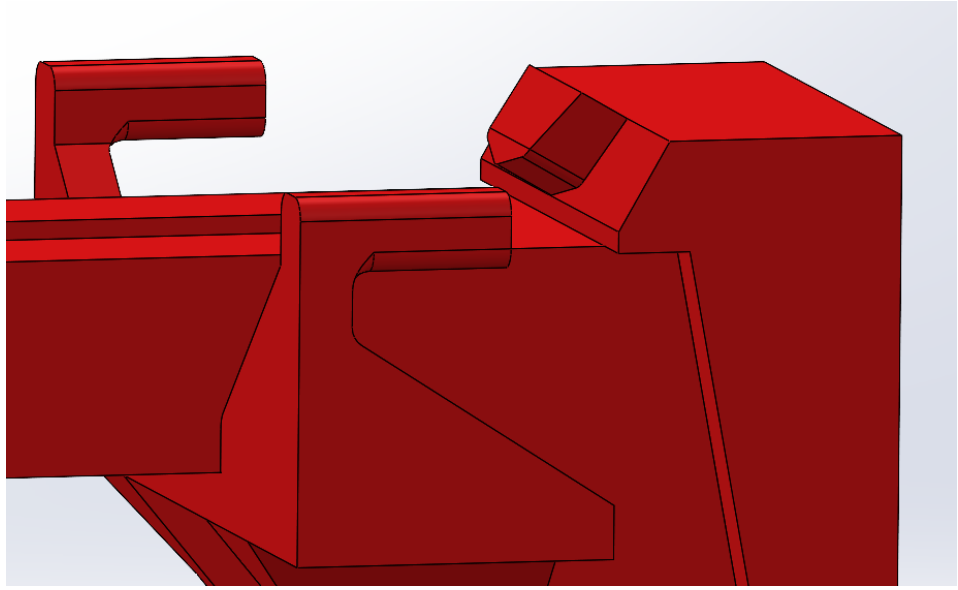

Locking on the back of the helmet

2. **Internal locking**
   - Blocks the transversal translation
   - Using 2 M12 screws with opposite thread, we developed a device able to compress the cheek pads of the helmet

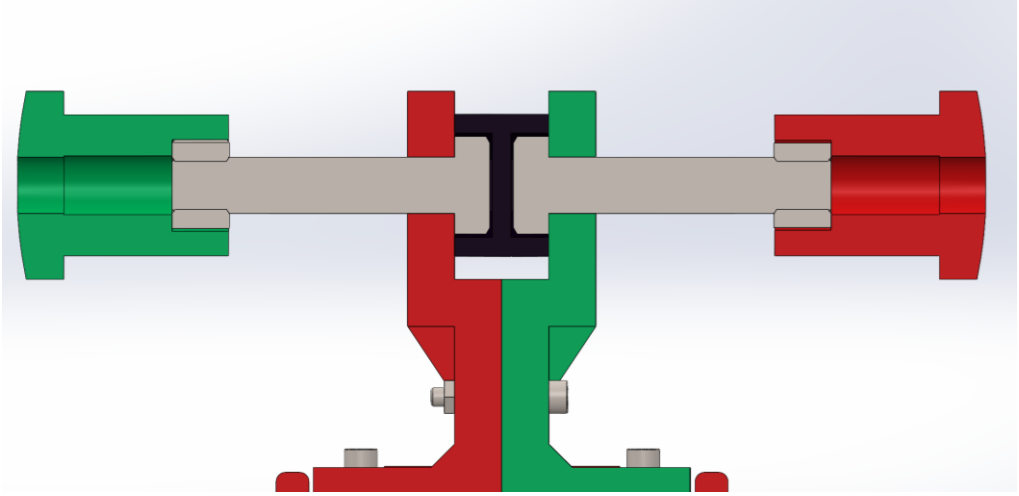

Internal locking of the helmet

Locking strategy

The chin guard and visor movement generate similar loading conditions on the support.

Using the previous 2 strategies combined with the contact of the helmet on the support, the helmet is locked in 3 points (providing a reliable and strong locking mechanisms able to resist against possible impacts of the robot's end effector).

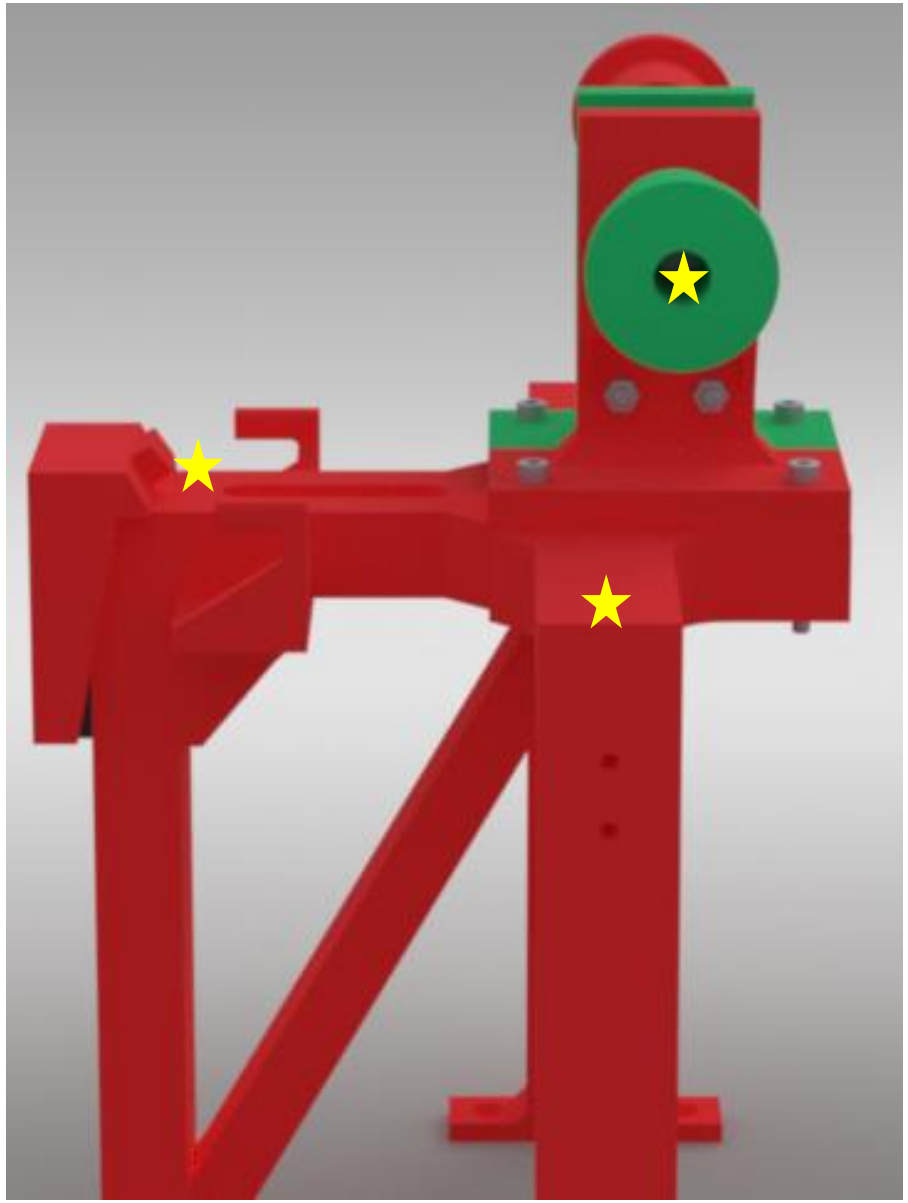

Helmet mounting procedure

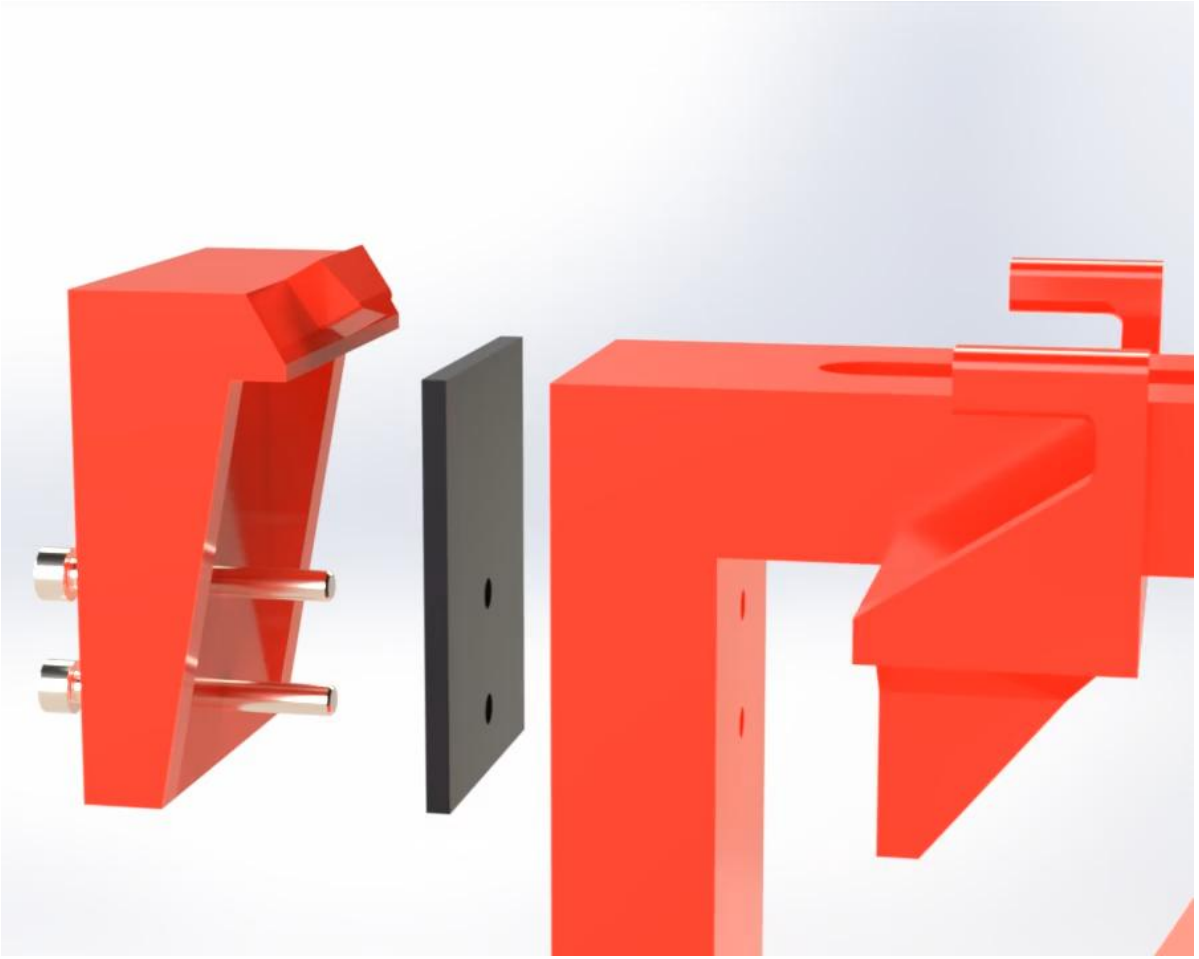

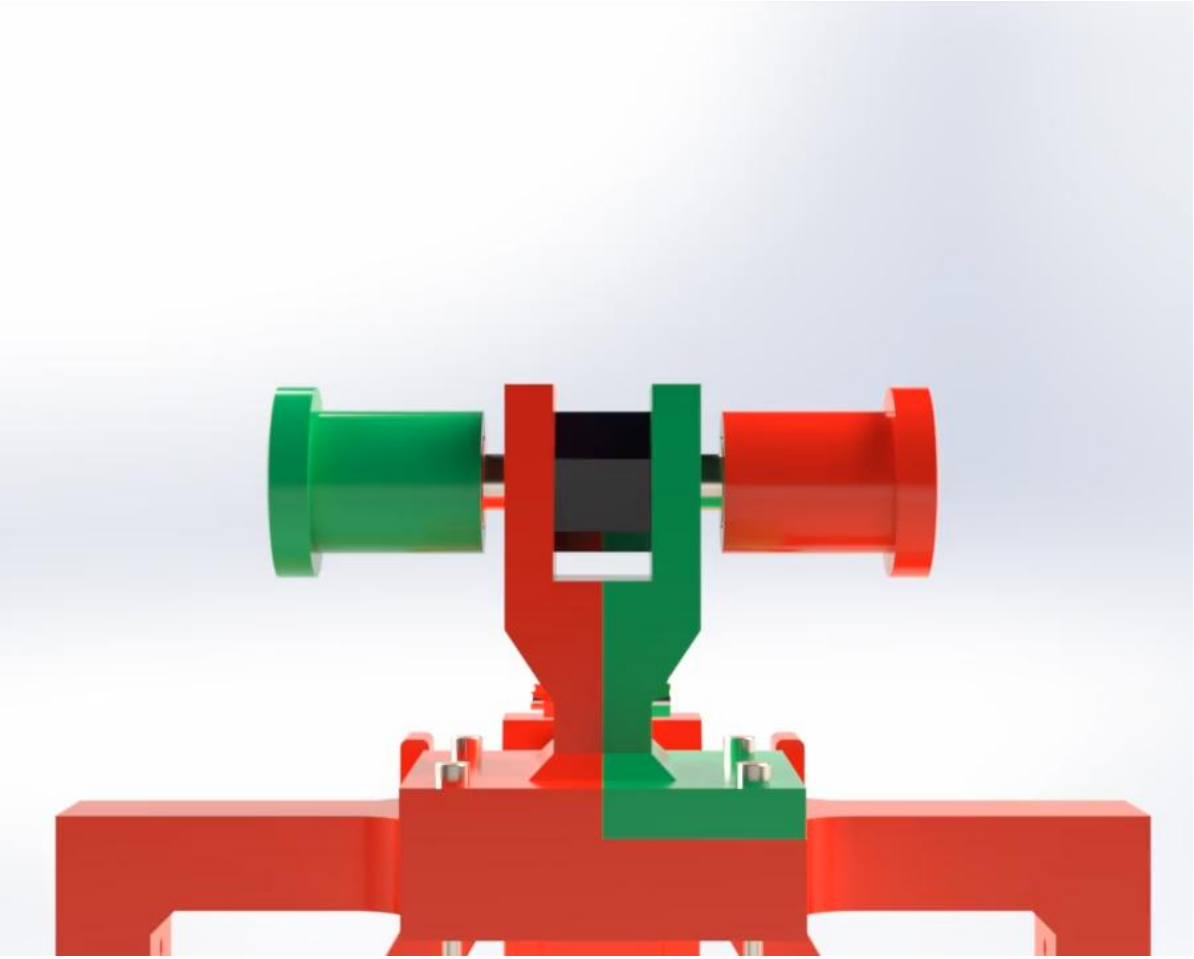

End-effector

02

Functionalities

- Unlock the chin guard release mechanism
- Open and close the visor
- Servomotor-driven rack-and-pinion opening and closing system
- Directly mounted to the robotic arm

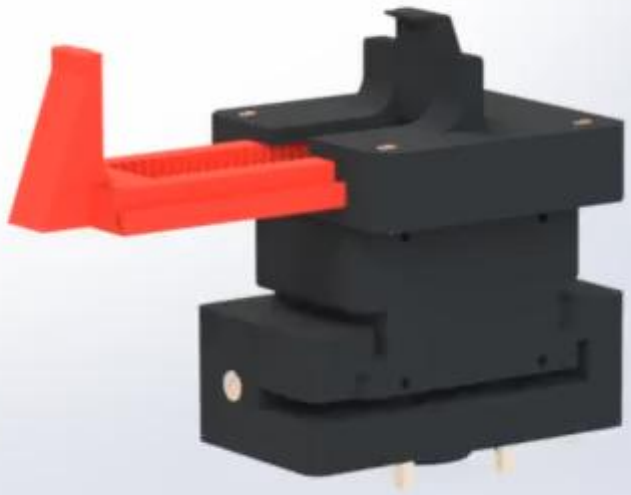

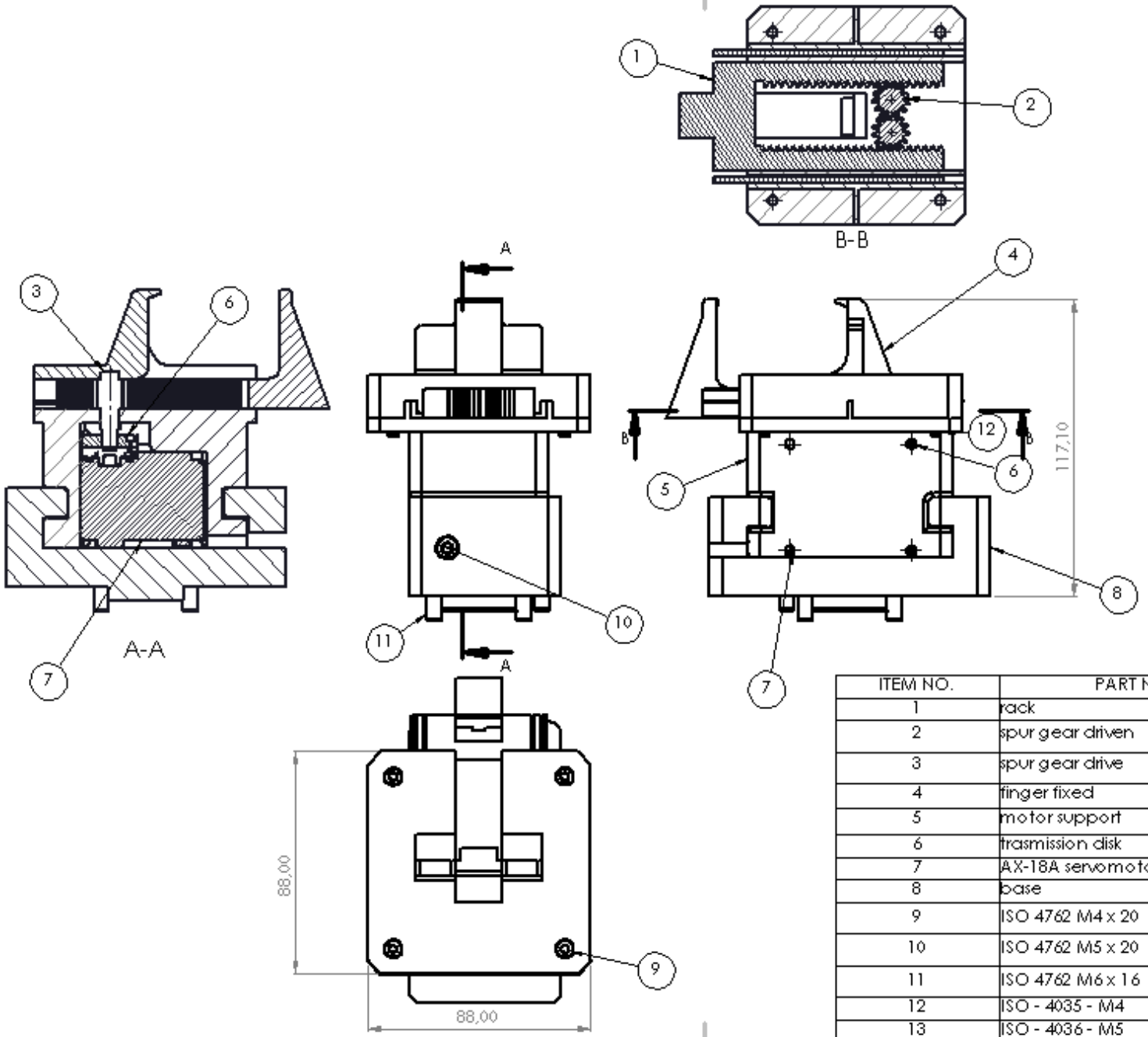

ITEM NO.	PART NUMBER	QTY.
1	rack	1
2	spur gear driven	1
3	spur gear drive	1
4	finger fixed	1
5	motor support	1
6	trasmission disk	1
7	AX-18A servomotor	1
8	base	1
9	ISO 4762 M4 x 20	4
10	ISO 4762 M5 x 20	2
11	ISO 4762 M6 x 16	4
12	ISO - 4035 - M4	4
13	ISO - 4036 - M5	2

Size of the gripper (mm): 117x88x88

Motion mechanism

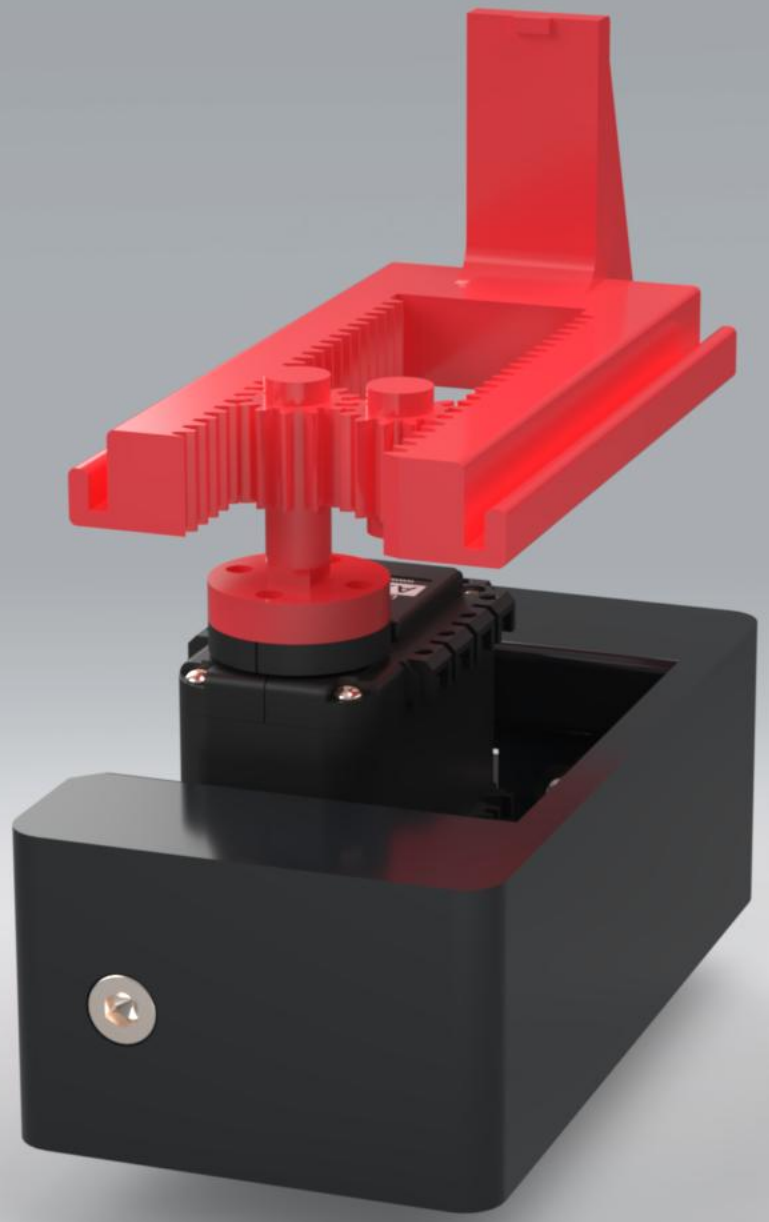

Coupling with the robotic arm

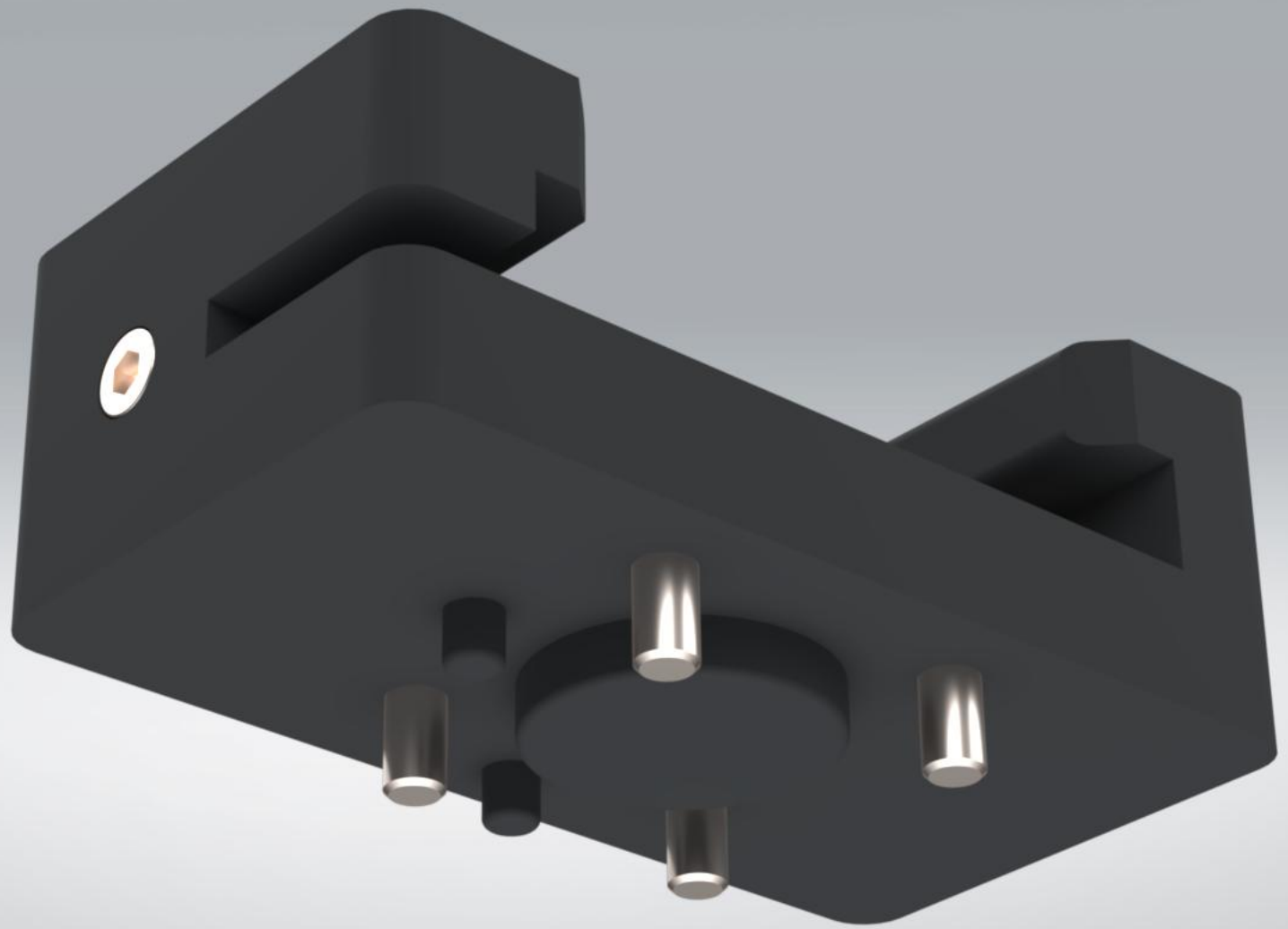

Robot programming

03

Robot programming

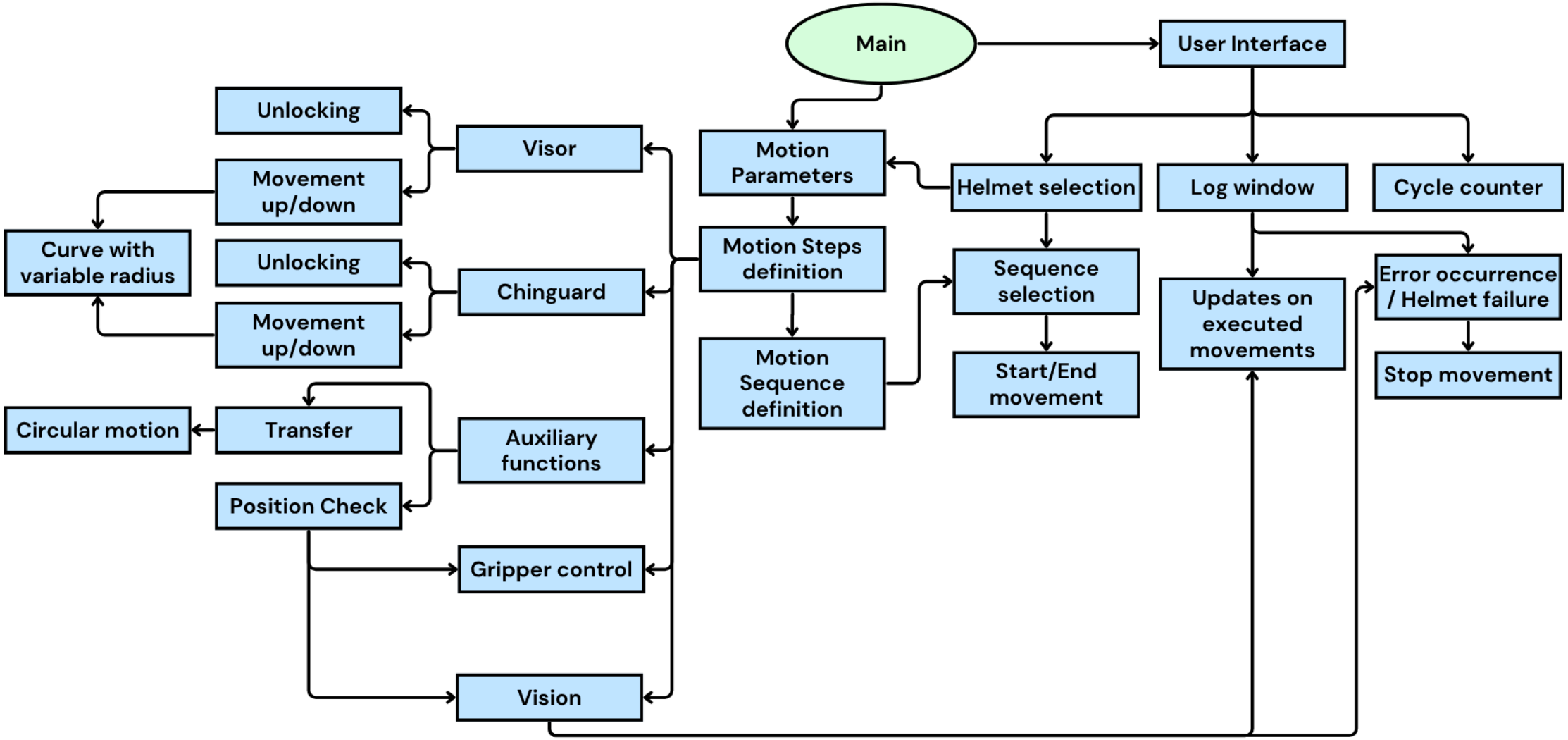

Path planning

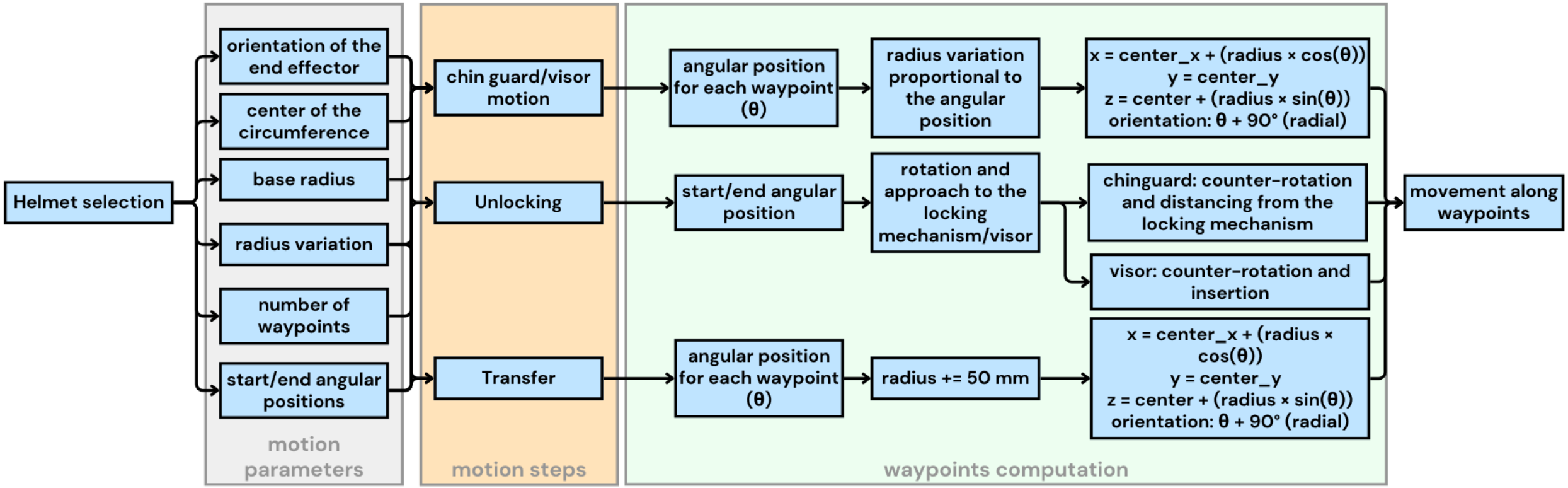

Motion sequences

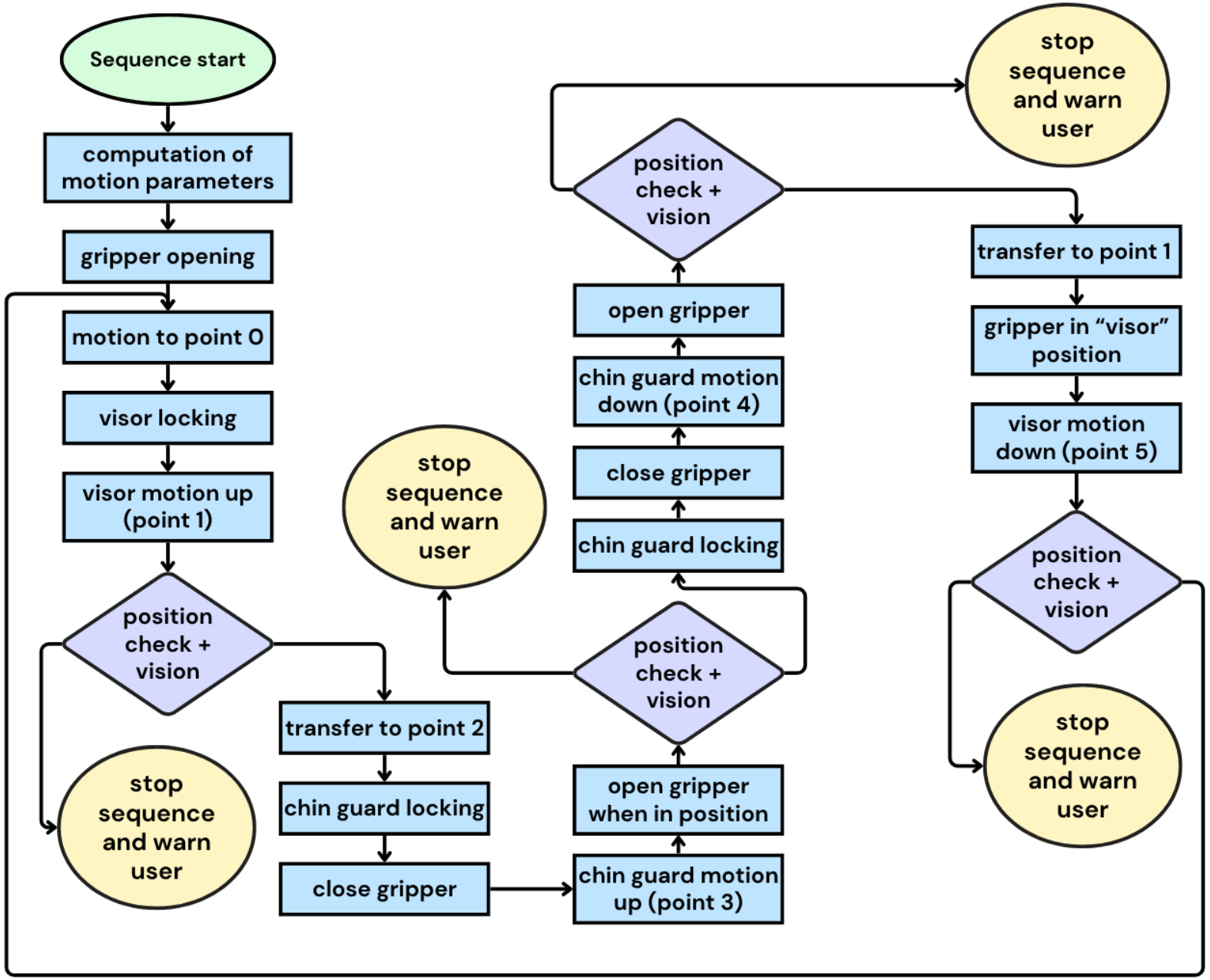

Main features

- **Adaptability**: the code is unique independently on the helmet size and sequence and does not need to be re-run each time a change is performed

- **Fault detection**: through the robot integrated camera, results in the stop of the motion sequence and an error message on the user interface

- **Live updates** on the performed motion on the user interface

- **Flexibility**: the code may work also for different helmets just by tuning the parameters in the specific function

- **Monitoring of cycle count**: cycle counter displayed and updated live on the user interface

- **Easiness of usage**: simple user interface, displaying instructions step by step and robust with respect to mis-clicking thanks to buttons deactivation

Status inspection

04

User Interface

- Select helmet size and test sequence
- Real-time feedback for each movement
- Error notifications and cycle counter always visible

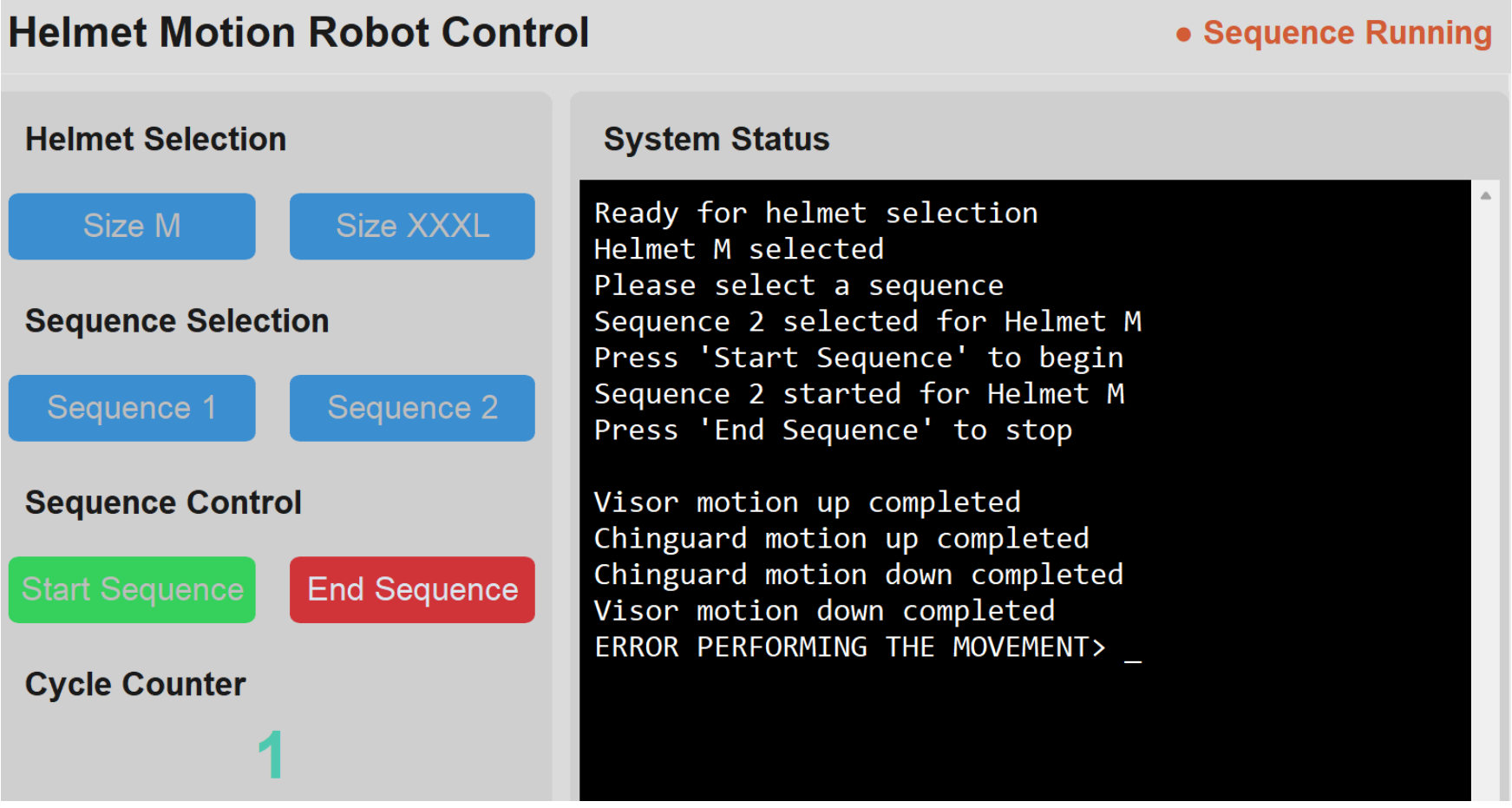

Task Verification with Vision Job

- Color markers placed on key helmet areas
- TMFlow Vision Job in color recognition mode
- Movement proceeds only if color is detected
- Error = motion stop + user alert

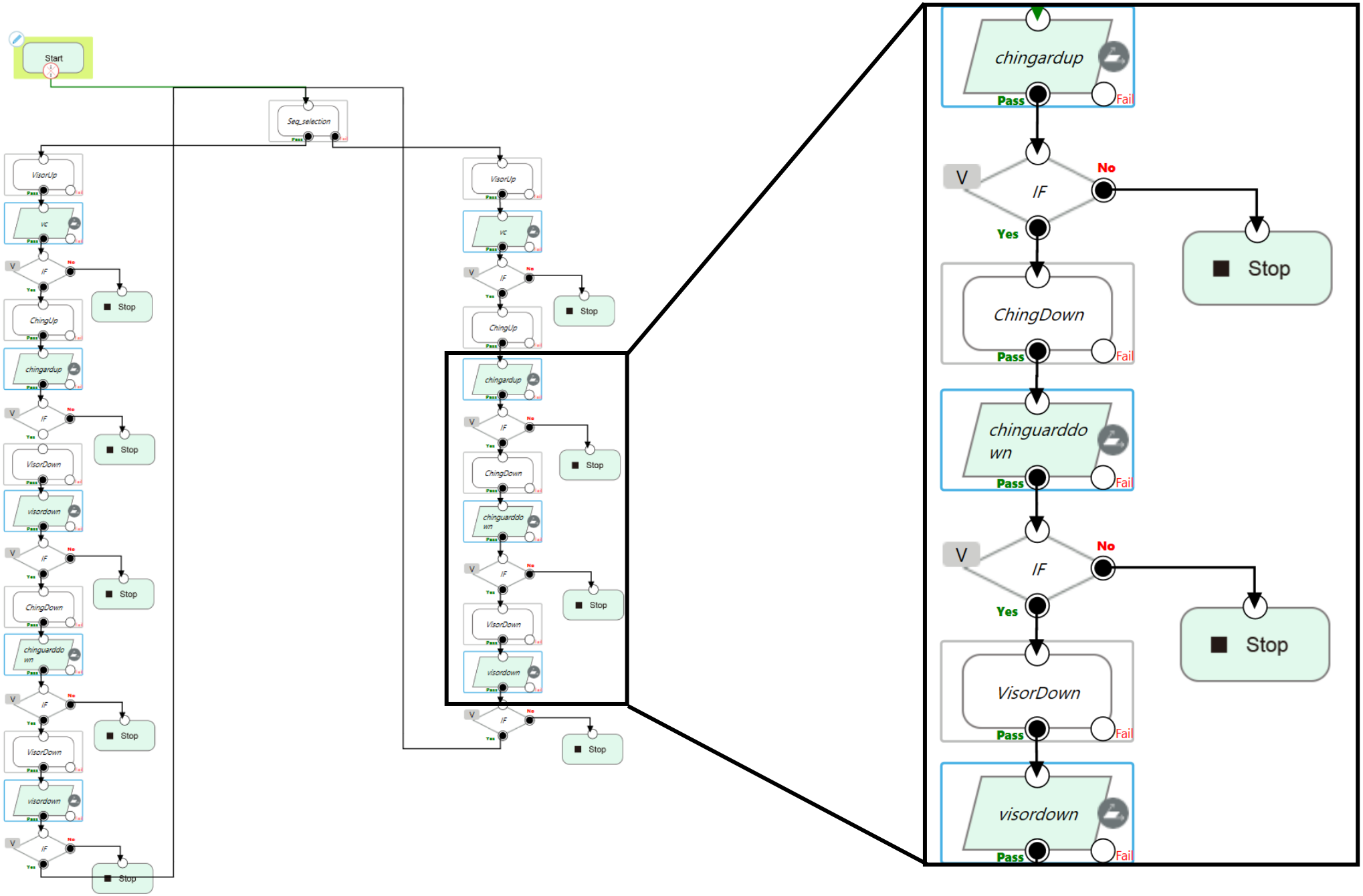
Start
Seq_selection
VisorUp
vc
IF
Stop
ChingUp
chingardup
VisorDown
visordown
ChingDown
chinguarddown
chingardup
Pass
Fail
No
Yes
ChingDown
chinguarddown
Pass
Fail
No
Yes
VisorDown
Pass
Fail
visordown
Pass
Fail

Future developments

- Approximately a **50% increase in task execution speed** can be achieved by modifying the motion function in the main code from 'point-to-point' to 'point-to-line', so to avoid robot vibrations (as tested during the live demonstration).

- **Improvement of the locking mechanism on the back** of the support, replacing bolts and screws with an interlocking mechanism similar to a retention clip.

- Raising the height of the support so to avoid the wooden base extension.

- **Further time optimization** focusing on the **transfer movements**, by substituting the circular motion with a spline-like path.

Thank You!