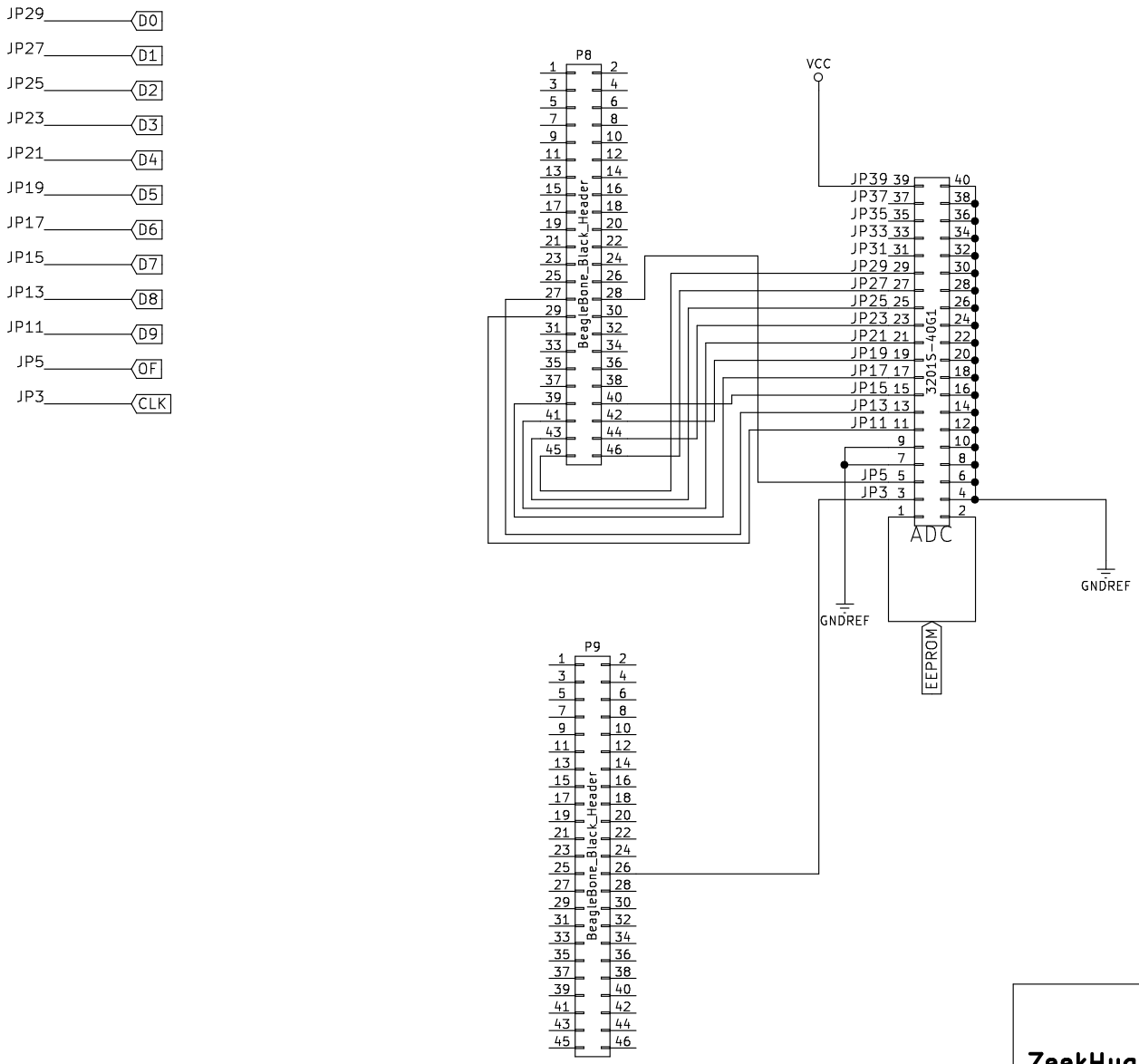

ZeekHuge

Sheet: /
File: BBtoADC.sch

Title: Beaglebone black to ADC interfacing

Size: A4	Date: 27 May 2016	Rev: A
KiCad E.D.A. kicad 4.0.2+e4-622538ubuntu14.04.1-stable		Id: 1/1