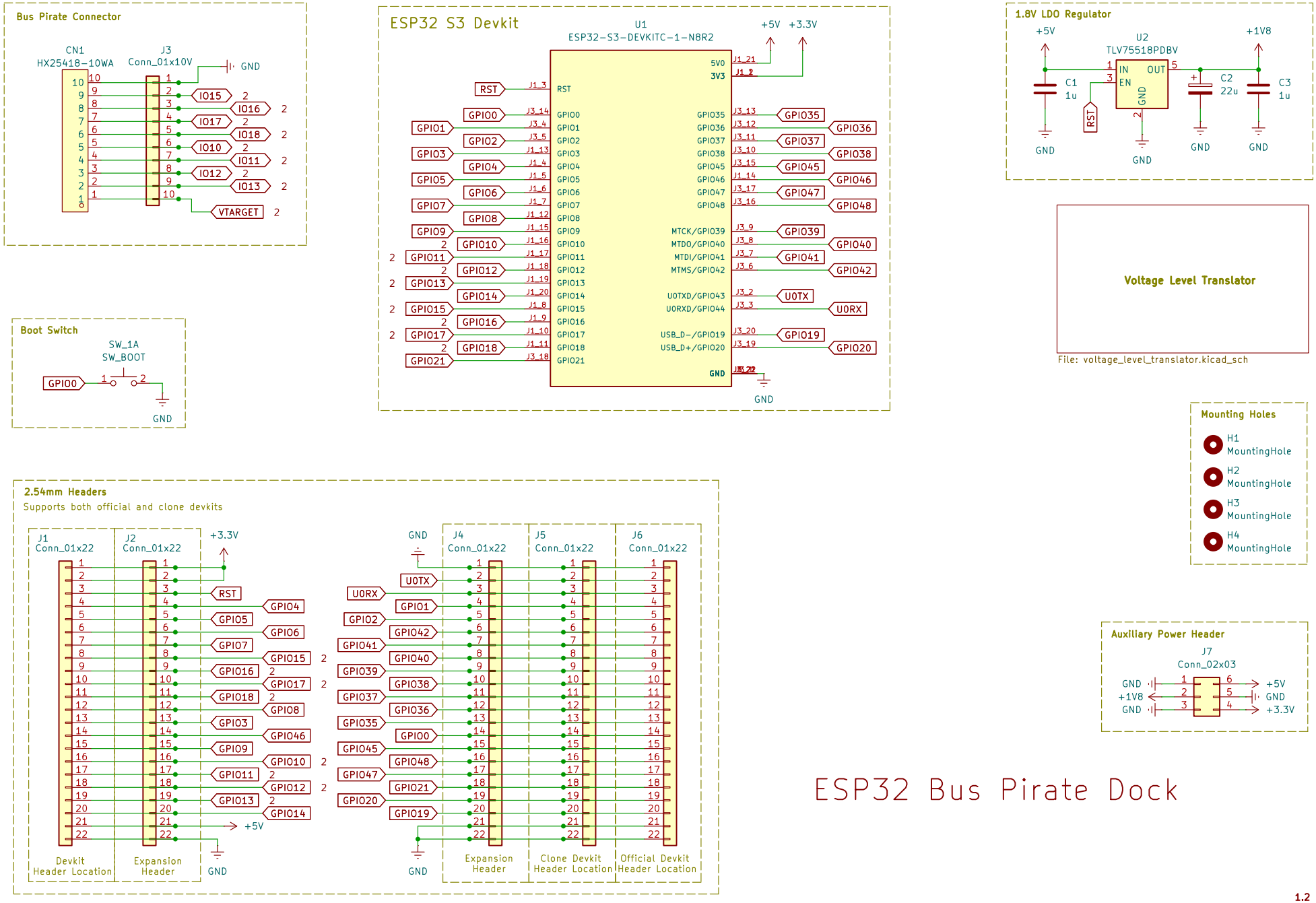
Bus Pirate Connector
CN1
HX25418-10WA
J3
Conn_01x10V
GND
IO15
IO16
IO17
IO18
IO10
IO11
IO12
IO13
VTARGET
ESP32 S3 Devkit
U1
ESP32-S3-DEVKITC-1-N8R2
+5V
+3.3V
5V0
3V3
RST
GPIO00
GPIO01
GPIO02
GPIO03
GPIO04
GPIO05
GPIO06
GPIO07
GPIO08
GPIO09
GPIO010
GPIO011
GPIO012
GPIO013
GPIO014
GPIO015
GPIO016
GPIO017
GPIO018
GPIO021
GPIO035
GPIO036
GPIO037
GPIO038
GPIO045
GPIO046
GPIO047
GPIO048
GPIO039
GPIO040
GPIO041
GPIO042
U0TX
U0RX
GPIO019
GPIO020
MTCK/GPIO039
MTDO/GPIO040
MTDI/GPIO041
MTMS/GPIO042
U0TXD/GPIO043
U0RXD/GPIO044
USB_D-/GPIO019
USB_D+/GPIO020
GND
1.8V LDO Regulator
+5V
U2
TLV75518PDBV
+1V8
IN
OUT
EN
GND
C1
1u
C2
22u
C3
1u
RST
Voltage Level Translator
File: voltage_level_translator.kicad_sch
Boot Switch
SW_1A
SW_BOOT
GPIO00
GND
Mounting Holes
H1
MountingHole
H2
MountingHole
H3
MountingHole
H4
MountingHole
2.54mm Headers
Supports both official and clone devkits
J1
Conn_01x22
J2
Conn_01x22
+3.3V
RST
GPIO04
GPIO05
GPIO06
GPIO07
GPIO015
GPIO016
GPIO017
GPIO018
GPIO8
GPIO3
GPIO46
GPIO9
GPIO010
GPIO011
GPIO012
GPIO013
GPIO014
+5V
GND
Devkit
Header Location
Expansion
Header
J4
Conn_01x22
J5
Conn_01x22
J6
Conn_01x22
U0TX
U0RX
GPIO01
GPIO02
GPIO42
GPIO41
GPIO40
GPIO39
GPIO38
GPIO37
GPIO36
GPIO35
GPIO00
GPIO45
GPIO48
GPIO47
GPIO021
GPIO020
GPIO019
Expansion
Header
Clone Devkit
Header Location
Official Devkit
Header Location
Auxiliary Power Header
J7
Conn_02x03
GND
+1V8
GND
+5V
GND
+3.3V
ESP32 Bus Pirate Dock
1.2

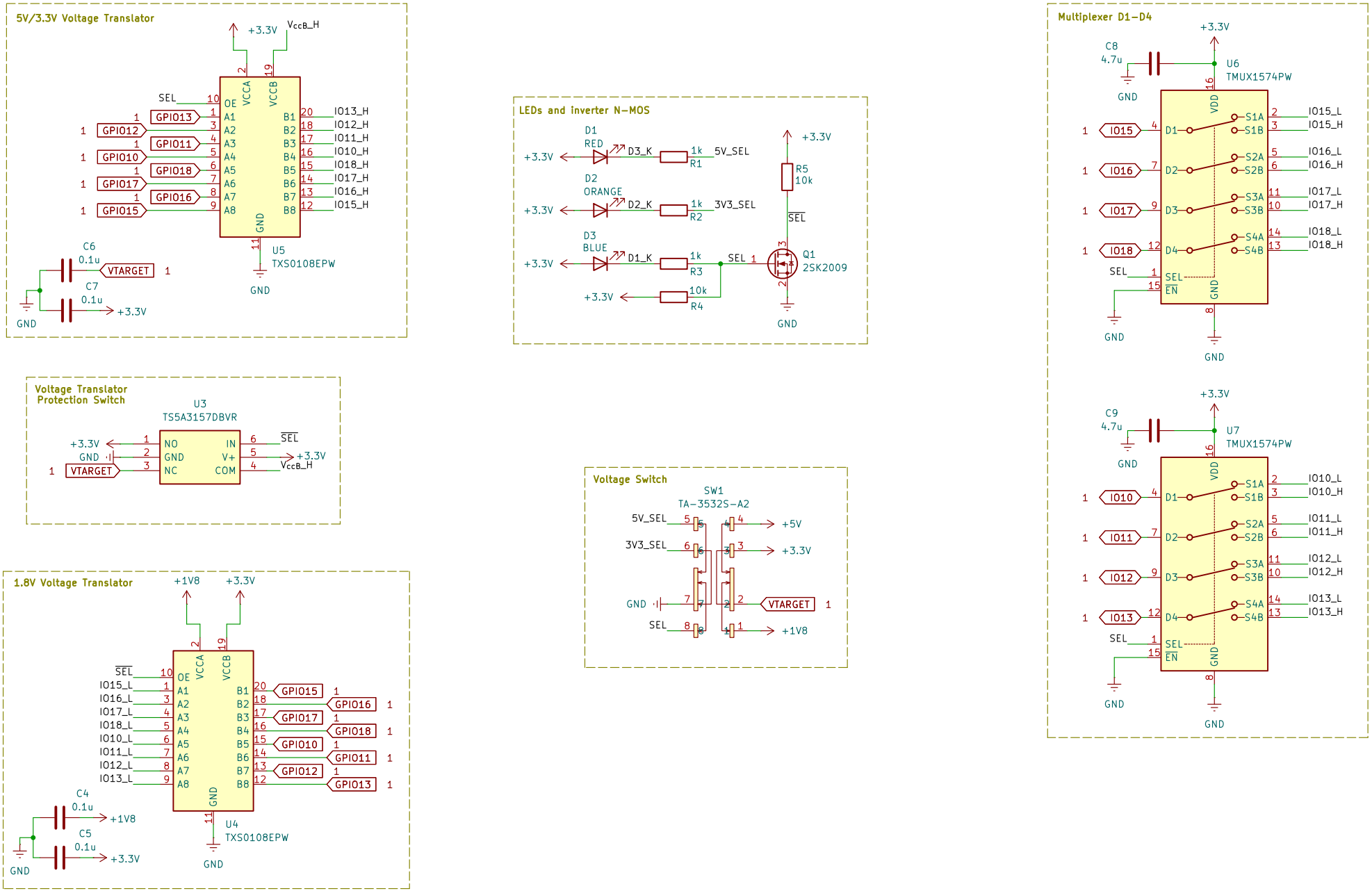
5V/3.3V Voltage Translator
+3.3V
VccB_H
SEL
OE
VCCA
VCCB
A1
A2
A3
A4
A5
A6
A7
A8
B1
B2
B3
B4
B5
B6
B7
B8
GND
GPIO13
GPIO12
GPIO11
GPIO10
GPIO18
GPIO17
GPIO16
GPIO15
IO13_H
IO12_H
IO11_H
IO10_H
IO18_H
IO17_H
IO16_H
IO15_H
U5
TXS0108EPW
C6
0.1u
C7
0.1u
VTARGET
LEDs and inverter N-MOS
D1
RED
D2
ORANGE
D3
BLUE
D3_K
D2_K
D1_K
1k
R1
R2
R3
R4
10k
5V_SEL
3V3_SEL
R5
10k
Q1
2SK2009
Multiplexer D1-D4
C8
4.7u
U6
TMUX1574PW
VDD
D1
D2
D3
D4
S1A
S1B
S2A
S2B
S3A
S3B
S4A
S4B
EN
IO15
IO16
IO17
IO18
IO15_L
IO15_H
IO16_L
IO16_H
IO17_L
IO17_H
IO18_L
IO18_H
C9
4.7u
U7
TMUX1574PW
IO10
IO11
IO12
IO13
IO10_L
IO10_H
IO11_L
IO11_H
IO12_L
IO12_H
IO13_L
IO13_H
Voltage Translator
Protection Switch
U3
TS5A3157DBVR
NO
GND
NC
IN
V+
COM
Voltage Switch
SW1
TA-3532S-A2
5V_SEL
3V3_SEL
+5V
+1V8
1.8V Voltage Translator
+1V8
U4
TXS0108EPW
C4
0.1u
C5
0.1u