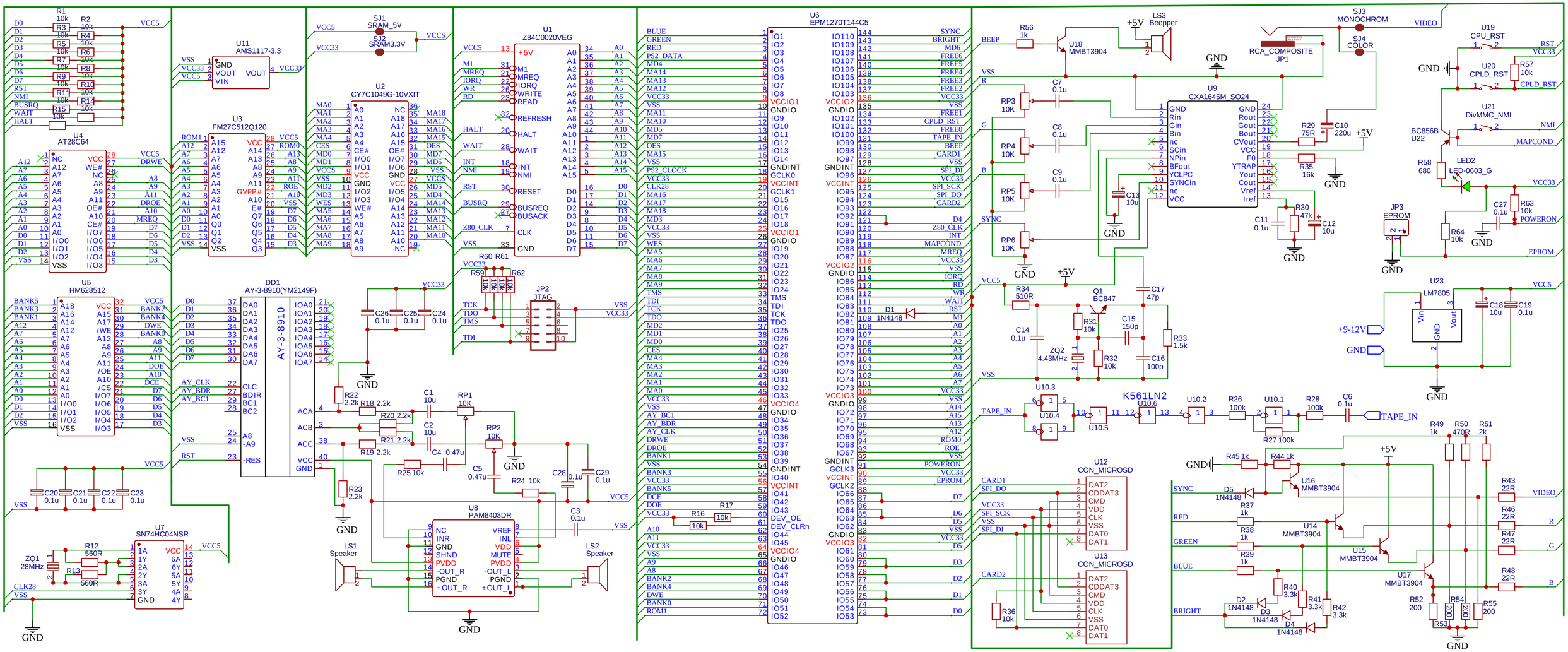
U1
Z84C0020VEG
U2
CY7C1049G-10VXIT
U3
FM27C512Q120
U4
AT28C64
U5
HM628512
U6
EPM1270T144C5
U7
SN74HC04NSR
U8
PAM8403DR
U9
CXA1645M_SO24
U10.3
U10.4
U10.5
U10.6
U10.2
U10.1
U11
AMS1117-3.3
U12
CON_MICROSD
U13
CON_MICROSD
U14
MMBT3904
U15
MMBT3904
U16
MMBT3904
U17
MMBT3904
U18
MMBT3904
U19
CPU_RST
U20
CPLD_RST
U21
DivMMC_NMI
U22
BC856B
U23
LM7805
DD1
AY-3-8910(YM2149F)
AY-3-8910
K561LN2
SJ1
SRAM_5V
SJ2
SRAM3.3V
SJ3
MONOCHROM
SJ4
COLOR
RCA_COMPOSITE
JP1
JP2
JTAG
JP3
EPROM
LS1
Speaker
LS2
Speaker
LS3
Beepper
Q1
BC847
ZQ1
28MHz
ZQ2
4.43MHz
LED2
LED-0603_G
+9-12V
GND
VCC5
VCC33
VSS
TAPE_IN
VIDEO
EPROM
POWERON
MAPCOND
NMI
RST
CPLD_RST
CARD1
CARD2
SPI_DO
SPI_SCK
SPI_DI
SYNC
BEEP
BRIGHT
R
G
B
CLK28
TITLE:
CPLDCtrum
REV: 1.0
Company: Your Company
Sheet: 1/1
Date: 2024-08-06
Drawn By: Andrey Choo
EasyEDA