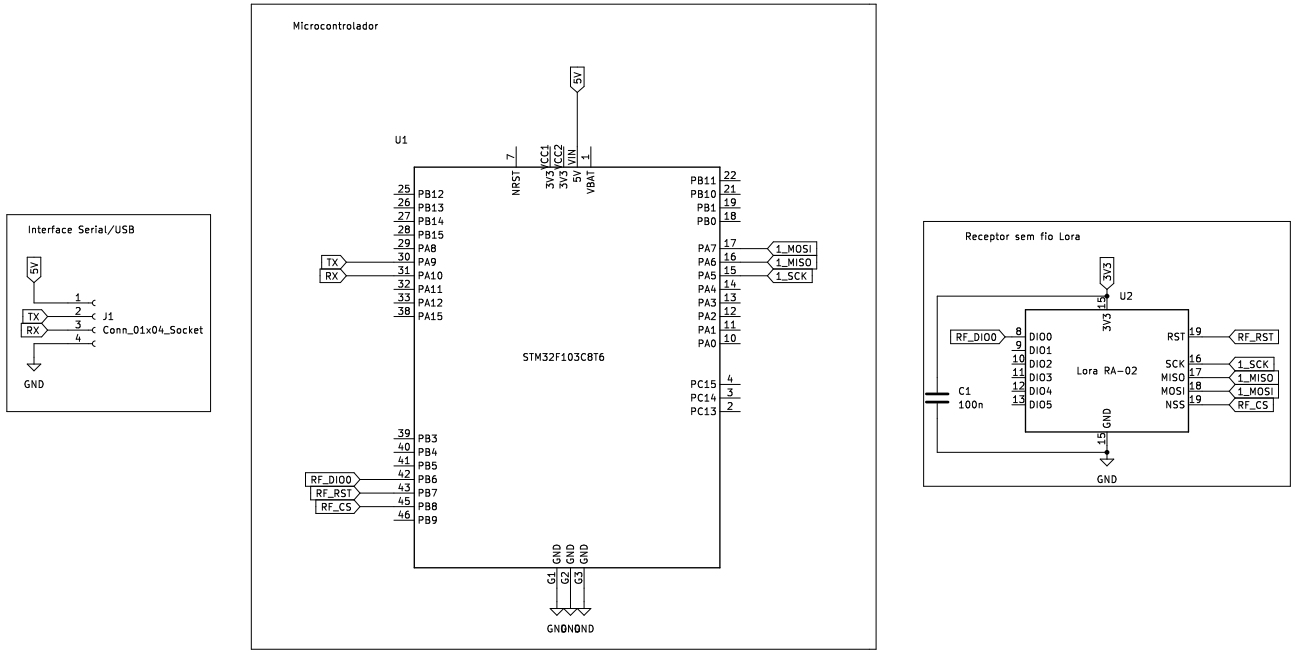
Microcontrolador
U1
5V
NRST
3V3 VCC1
3V3 VCC2
5V VIN
VBAT
PB12
PB13
PB14
PB15
PA8
PA9
PA10
PA11
PA12
PA15
PB11
PB10
PB1
PB0
PA7
PA6
PA5
PA4
PA3
PA2
PA1
PA0
PC15
PC14
PC13
TX
RX
1_MOSI
1_MISO
1_SCK
STM32F103C8T6
PB3
PB4
PB5
PB6
PB7
PB8
PB9
RF_DIO0
RF_RST
RF_CS
G1 GND
G2 GND
G3 GND
GNDNOND

Interface Serial/USB
5V
TX
RX
J1
Conn_01x04_Socket
GND

Receptor sem fio Lora
3V3
U2
RF_DIO0
DIO0
DIO1
DIO2
DIO3
DIO4
DIO5
Lora RA-02
RST
SCK
MISO
MOSI
NSS
RF_RST
1_SCK
1_MISO
1_MOSI
RF_CS
C1
100n
GND