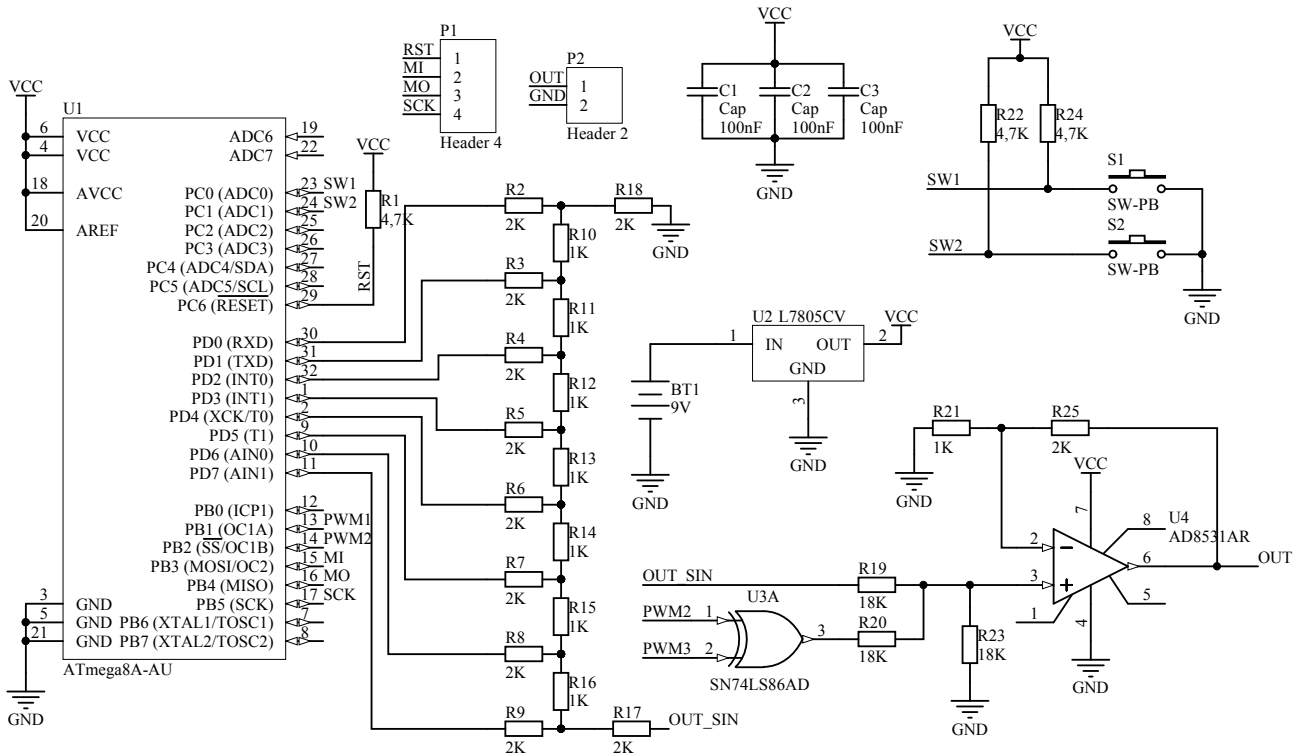

Title		
Size A4	Number	Revision
Date: 12.05.2013		Sheet of
File: C:\Users\admin\Desktop\Sheet1.SchDoc		Drawn By: